A1

# MF 555

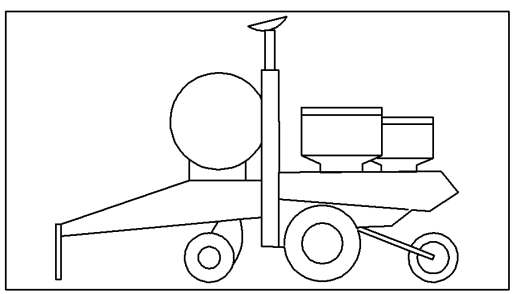

1637496M2 (1) 02/07

MASSEY FERGUSON

**Hitch, Tongue & Jack**
**Attelage, Timon & Cric**
**Kupplung, Zugstange & Wagenheber**
**Attacco, Timone & Martinetto**
**Enganche, Timón & Gato**

**10-5**

5-PM01-001-A

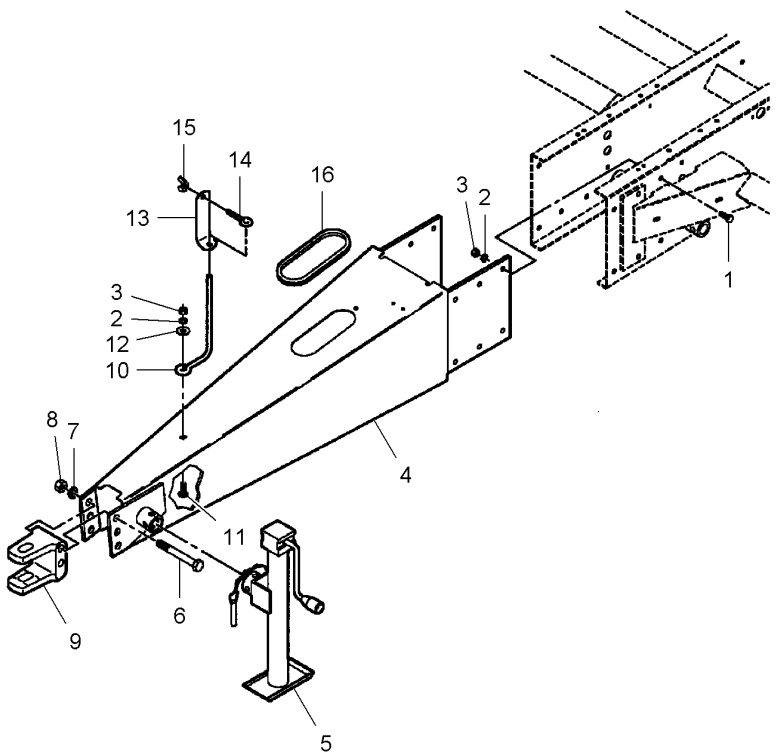


| | | | | | |
|---|---|---|---|---|---|
| 1* | 70921176 | 1/2"-13 X 1-1/4 | 12 | BOLT UNC | BOULON UNC<br>BULLONE UNC |
| 2* | Y705046 | 1/2" | 13 | LOCK WASHER | RONDELLE FREIN<br>RONDELLA ARRESTO |
| 3* | 704031 | 1/2"-13 | 13 | NUT UNC | ECROU UNC<br>DADO UNC |
| 4* | 854950M | | 1 | HITCH | ATTELAGE<br>ATTACCO |
| 5* | 400731 | 10-10 No 1 | 1 | JACK | CRIC<br>MARTINETTO |
| 6* | 70922978 | 3/4"-10 X 6 | 2 | CAPSCREW | VIS BOUCHON<br>TAPPO A VITE |
| 7* | 70919332 | 3/4" | 2 | LOCK WASHER | RONDELLE FREIN<br>RONDELLA ARRESTO |
| 8* | 70913160 | 3/4"-10 | 2 | NUT UNC | ECROU UNC<br>DADO UNC |
| 9* | 853800 | | 1 | CLEVIS | CHAPE<br>GANCIO D'ATTACCO |
| 10* | W218756B | | 1 | ROD | TRINGLE<br>ASTA |
| 11* | 70926838 | 1/2"-13 X 1-1/2 | 1 | BOLT UNC | BOULON UNC<br>BULLONE UNC |
| 12* | 70918431 | 1/2" | 1 | FLAT WASHER | RONDELLE PLATE<br>RONDELLE PIANA |
| 13* | WDH7252 | | 1 | CLAMP | COLLIER<br>FASCETTA |
| 14* | WDH7245 | 3/8"-16 | 1 | EYE BOLT | BOULON A OEIL<br>BULLONE A OCCHIO |
| 15* | Y704361 | 3/8"-16 | 1 | NUT | ECROU<br>DADO |
| 16* | 851556 | | 1 | TRIM | ENJOLIVEUR<br>FINITURA |

| | | | | | |
|---|---|---|---|---|---|
| | | | | MASCH.SCHRB.UNC<br>PERNO UNC | |
| | | | | SICHERUNGSRING<br>ARANDELA SEGURID | |
| | | | | MUTTER UNC<br>TUERCA UNC | |
| | | | | ANHAENGEKUPPLUNG<br>ENGANCHE | |
| | | | | WAGENHEBER<br>GATO | |
| | | | | HUTSCHRAUBE<br>TORNILLO TAPON | |
| | | | | SICHERUNGSRING<br>ARANDELA SEGURID | |
| | | | | MUTTER UNC<br>TUERCA UNC | |
| | | | | GABELSTUECK<br>GANCHO SEGURI. | |
| | | | | STANGE<br>VARILLA | |
| | | | | MASCH.SCHRB.UNC<br>PERNO UNC | |
| | | | | UNTERLEGSCHEIBEN<br>ARANDELA PLANA | |
| | | | | HALTESCHELLE<br>ABRAZADERA | |
| | | | | AUGENSCHRAUBE<br>ARMELLA | |
| | | | | MUTTER<br>TUERCA | |
| | | | | ZIERLEISTE<br>TAPIZADO | |

**Jack**
**Cric**
**Wagenheber**
**Martinetto**
**Gato**

**10-10**

5-PL64-001-B

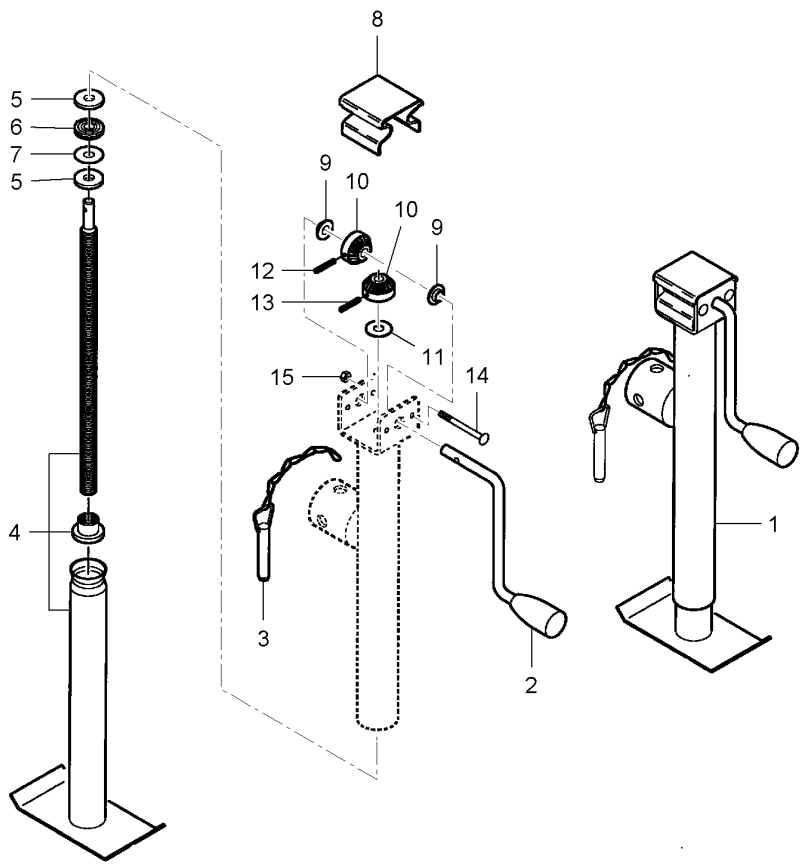


| | | | | | | |
|---|---|---|---|---|---|---|
| 1 | 400731 | | | **1** JACK | CRIC<br>MARTINETTO | WAGENHEBER<br>GATO |
| 2 | 291731 | 1 | | **1** CRANK | MANIVELLE<br>MANOVELLA | KURBEL<br>MANIVELA |
| 3* | 103183 | 1 | | **1** PIN | GOUPILLE<br>COPPIGLIA | STIFT<br>PASADOR |
| 4* | 400475 | 1 | | **1** TUBE | TUBE<br>TUBO. | ROHR<br>TUBO. |
| 5* | 291725 | 1 | | **2** WASHER | RONDELLE<br>RONDELLA | SCHEIBE<br>ARANDELA |
| 6* | 291739 | 1 | | **1** BALL BEARING | ROULEMENT BILLES<br>CUSCINETTO SFERE | KUGELLAGER<br>COJINETE DE BOLA |
| 7* | N291740 | 1 | | **1** SPACER | ENTRETOISE<br>DISTANZIALE | ABSTANDSTUECK<br>DISCO ESPACIADOR |
| 8* | 205956 | 1 | | **1** COVER | COUVERCLE<br>COPERCHIO | ABDECKUNG.<br>CUBIERTA |
| 9* | 744659 | 1 | | **2** BUSH | BAGUE<br>BOCCOLA | RING<br>CASQUILLO |
| 10* | 291735 | 1 | | **2** BEVEL GEAR | COURONNE CONIQUE<br>COPPIA CONICA | KEGELRAD<br>ENGRANAJE CONICO |
| 11* | 291756 | 1 | | **1** WASHER | RONDELLE<br>RONDELLA | SCHEIBE<br>ARANDELA |
| 12* | W932826-4 | 1 | | **1** PIN | GOUPILLE<br>COPPIGLIA | STIFT<br>PASADOR |
| 13* | 211935 | 1 | 3/16" X 13/16 | **1** PIN | GOUPILLE<br>COPPIGLIA | STIFT<br>PASADOR |
| 14* | W900311-4 | 1 | 1/4"-20 X 3 | **2** SCREW | VIS<br>VITE | SCHRAUBE<br>TORNILLO |
| 15* | 70923358 | 1 | 1/4"-20 | **2** LOCKNUT | ECROU FREIN<br>AUTOBLOCCANTE | SICHERUNGSMUTTER<br>CONTRATUERCA |

**Safety Chain**
**Chaine De Securite**
**Sicherheit Sägekette**
**Catena Di Sicurezza**
**Cadena De Seguridad**

**10-15**

5-PL65-001-B

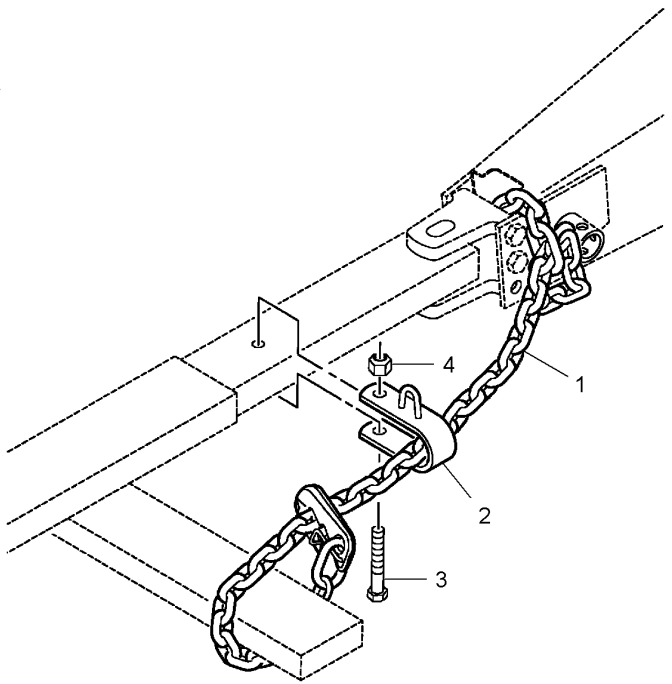


| | | | | | | |
|---|---|---|---|---|---|---|
| 1 | 700710846 | | **1** | CHAIN | CHAINE<br>CATENA | KETTE<br>CADENA |
| 2 | 700147598 | | **1** | CLEVIS | CHAPE<br>GANCIO D'ATTACCO | GABELSTUECK<br>GANCHO SEGURI. |
| 3* | 70925702 | 5/8"-11 X 3-1/2 | **1** | BOLT UNC | BOULON UNC<br>BULLONE UNC | MASCH.SCHRB.UNC<br>PERNO UNC |
| 3* | 7701659 | 5/8"-11 X 2-1/2 | **1** | CAPSCREW | VIS BOUCHON<br>TAPPO A VITE | HUTSCHRAUBE<br>TORNILLO TAPON |
| 4* | 70926937 | 5/8"-11 | **1** | LOCKNUT | ECROU FREIN<br>AUTOBLOCCANTE | SICHERUNGSMUTTER<br>CONTRATUERCA |

**Mainframe**
**Châssis Principal**
**Hauptrahmen**
**Telaio Principale**
**Bastidor Principal**

**10-20**

5-PM02-001-A

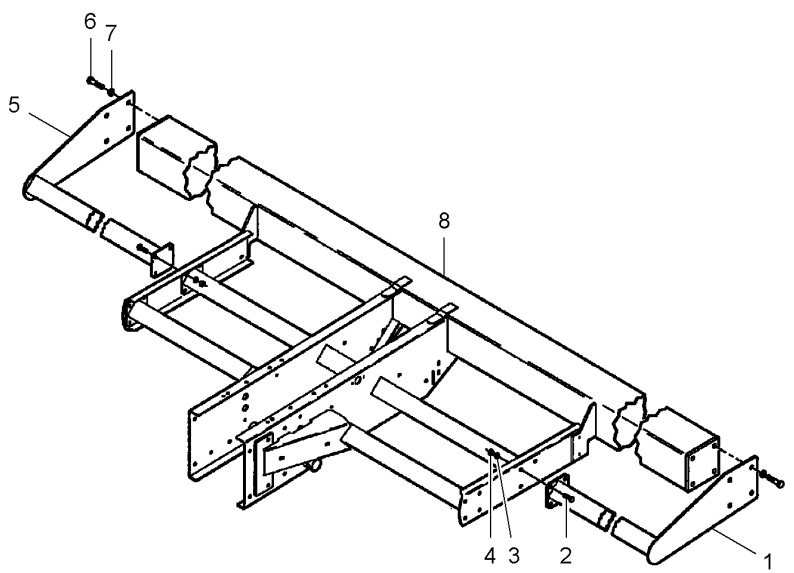


| | | | | | | |
|---|---|---|---|---|---|---|
| 1 | 852987 | [AC] | **1** | BAR | BARRE<br>BARRA | STAB<br>BARRA |
| 1 | 852989 | [D] | **1** | BAR | BARRE<br>BARRA | STAB<br>BARRA |
| 1 | 852991 | [BE] | **1** | BAR | BARRE<br>BARRA | STAB<br>BARRA |
| 1 | 852993 | [F] | **1** | BAR | BARRE<br>BARRA | STAB<br>BARRA |
| 1* | 852995 | [G] | **1** | BAR | BARRE<br>BARRA | STAB<br>BARRA |
| 2* | 701235 | 1/2"-13 X 1-1/2 | **8** | BOLT UNC | BOULON UNC<br>BULLONE UNC | MASCH.SCHRB.UNC<br>PERNO UNC |
| 3* | Y705046 | 1/2" | **8** | LOCK WASHER | RONDELLE FREIN<br>RONDELLA ARRESTO | SICHERUNGSRING<br>ARANDELA SEGURID |
| 4* | 704031 | 1/2"-13 | **8** | NUT UNC | ECROU UNC<br>DADO UNC | MUTTER UNC<br>TUERCA UNC |
| 5* | 852986 | [AC] | **1** | BAR | BARRE<br>BARRA | STAB<br>BARRA |
| 5* | N852988 | [D] | **1** | BAR | BARRE<br>BARRA | STAB<br>BARRA |
| 5* | 852990 | [BE] | **1** | BAR | BARRE<br>BARRA | STAB<br>BARRA |
| 5* | 852992 | [F] | **1** | BAR | BARRE<br>BARRA | STAB<br>BARRA |
| 5* | 852994 | [G] | **1** | BAR | BARRE<br>BARRA | STAB<br>BARRA |
| 6* | 70922664 | 5/8"-11 X 2 | **8** | BOLT UNC | BOULON UNC<br>BULLONE UNC | MASCH.SCHRB.UNC<br>PERNO UNC |
| 7* | 70917373 | 5/8" | **8** | LOCK WASHER | RONDELLE FREIN<br>RONDELLA ARRESTO | SICHERUNGSRING<br>ARANDELA SEGURID |
| 8* | N856866 | [A] | **1** | FRAME | BATI<br>TELAIO | RAHMEN<br>BASTIDOR |
| 8* | N856867 | [B] | **1** | FRAME | BATI<br>TELAIO | RAHMEN<br>BASTIDOR |
| 8* | 851286 | [C] | **1** | FRAME | BATI<br>TELAIO | RAHMEN<br>BASTIDOR |
| 8* | N851287 | [D] | **1** | FRAME | BATI<br>TELAIO | RAHMEN<br>BASTIDOR |
| 8* | 851288 | [E] | **1** | FRAME | BATI<br>TELAIO | RAHMEN<br>BASTIDOR |
| 8* | 851429 | [F] | **1** | FRAME | BATI<br>TELAIO | RAHMEN<br>BASTIDOR |
| 8* | 851433 | [G] | **1** | FRAME | BATI<br>TELAIO | RAHMEN<br>BASTIDOR |

[A] 3 ROW NARROW
3 RANGS ETROITS
3 SCHMAL REIHE
3 LINEA STRETTA
3 LINEA ESTRECHO

**Mainframe**
**Châssis Principal**
**Hauptrahmen**
**Telaio Principale**
**Bastidor Principal**

**10-20**

5-PM02-001-A

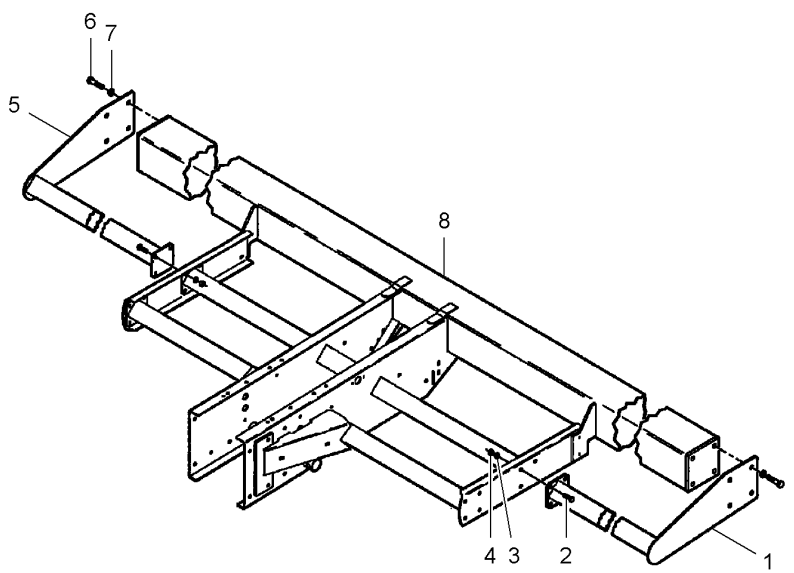


[B] 3 ROW WIDE
3 RANGS LARGES
3 BREITE REIHE
3 LINEA LARGA
3 LINEA ANCHA

[C] 4 ROW
4 RANGS
4 REIHE
4 LINEA
4 LINEA

[D] 6 ROW NARROW
6 RANGS ETROITS
6 SCHMAL REIHE
6 LINEAS STRETTA
6 LINEAS ESTRECHO

[E] 6 ROW WIDE - 8 ROW NARROW
6 RANGS LARGES - 8 RANGS ETROITS
6 BREITE REIHE - 8 SCHMAL REIHE
6 LINEAS LARGA - 8 LINEAS STRETTA
6 LINEAS ANCHA - 8 LINEAS ESTRECHO

[F] 8 ROW WIDE
8 RANGS LARGES
8 BREITE REIHE
8 LINEA LARGA
8 LINEA ANCHA

[G] 12 ROW NARROW
12 RANGS ETROITS
12 SCHAMAL REIHE
12 LINEA STRETTA
12 LINEA ESTRECHO

| Mainframe<br>Châssis Principal<br>Hauptrahmen<br>Telaio Principale<br>Bastidor Principal | 10-25 | Vertical Fold Frame<br>Châssis Rabattable<br>Falte Rahmen<br>Telaio Ribaltabile<br>Bastidor Abatible |
|---|---|---|

5-PM02-002-A

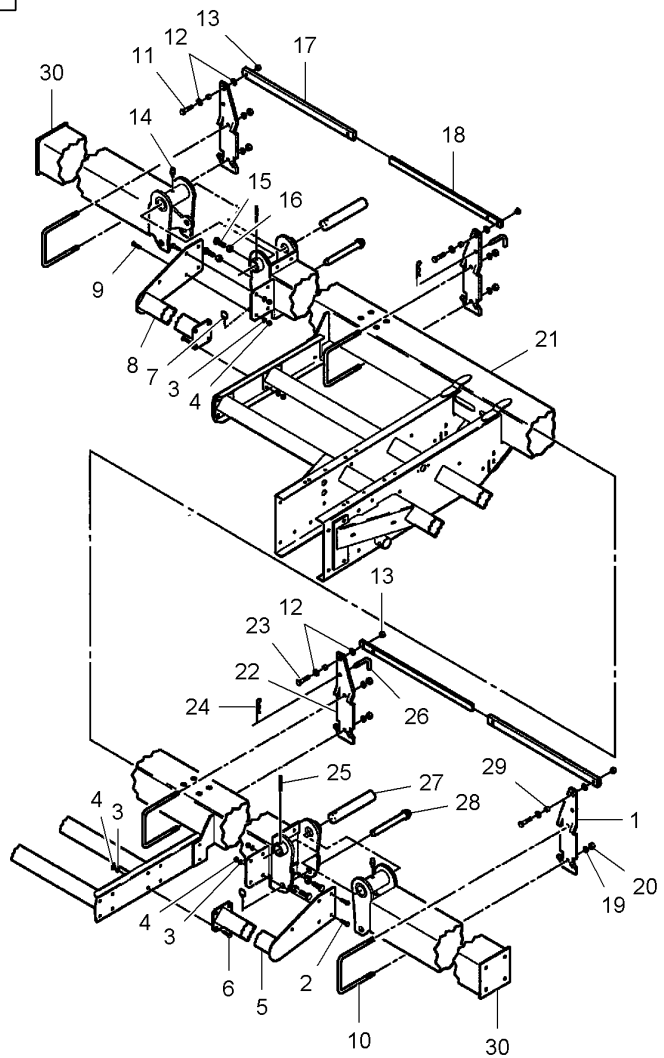


| | | | | | |
|---|---|---|---|---|---|
| 1* | W247825B | ◀ | 2 | PLATE | PLAQUE<br>PIASTRA | PLATTE<br>PLATO |
| 2* | 70921176 | 1/2"-13 X 1-1/4 | 4 | BOLT UNC | BOULON UNC<br>BULLONE UNC | MASCH.SCHRB.UNC<br>PERNO UNC |
| 3* | Y705046 | 1/2" | 16 | LOCK WASHER | RONDELLE FREIN<br>RONDELLA ARRESTO | SICHERUNGSRING<br>ARANDELA SEGURID |
| 4* | 704031 | 1/2"-13 | 16 | NUT UNC | ECROU UNC<br>DADO UNC | MUTTER UNC<br>TUERCA UNC |
| 5* | 853012 | [A]<br>◀ | 1 | BAR | BARRE<br>BARRA | STAB<br>BARRA |
| 5* | 853016 | [B]<br>◀ | 1 | BAR | BARRE<br>BARRA | STAB<br>BARRA |
| 6* | 701235 | 1/2"-13 X 1-1/2 | 8 | BOLT UNC | BOULON UNC<br>BULLONE UNC | MASCH.SCHRB.UNC<br>PERNO UNC |
| 7* | FX02704 | | 2 | PIN | GOUPILLE<br>COPPIGLIA | STIFT<br>PASADOR |
| 8* | 853011 | [A]<br>▶ | 1 | BAR | BARRE<br>BARRA | STAB<br>BARRA |
| 8* | 853015 | [B]<br>▶ | 1 | BAR | BARRE<br>BARRA | STAB<br>BARRA |
| 9* | 70919089 | 1/2"-13 X 1-3/4 | 4 | BOLT UNC | BOULON UNC<br>BULLONE UNC | MASCH.SCHRB.UNC<br>PERNO UNC |
| 10* | **W232588B** | 5/8"-11 X 7-1/16 | 4 | U BOLT | ETRIER FILETE<br>BULLONE A STAFFA | BUEGELSCHRAUBE<br>BRIDA EN U |
| 11* | 70926164 | 5/8"-11 X 2-3/4 | 2 | CAPSCREW | VIS BOUCHON<br>TAPPO A VITE | HUTSCHRAUBE<br>TORNILLO TAPON |
| 12* | 10030 | | 8 | WASHER | RONDELLE<br>RONDELLA | SCHEIBE<br>ARANDELA |
| 13* | 70926937 | 5/8"-11 | 4 | LOCKNUT | ECROU FREIN<br>AUTOBLOCCANTE | SICHERUNGSMUTTER<br>CONTRATUERCA |
| 14* | 70914687 | 1/4"-28 | 2 | GREASE FITTING | GRAISSEUR<br>INGRASSATORE | DRUCKSCHMIERKOPF<br>ENGRASADOR |
| 15* | 70923292 | 3/4"-10 X 2 | 4 | CAPSCREW | VIS BOUCHON<br>TAPPO A VITE | HUTSCHRAUBE<br>TORNILLO TAPON |
| 16* | 375113X1 | 3/4"-10 | 4 | NUT UNC | ECROU UNC<br>DADO UNC | MUTTER UNC<br>TUERCA UNC |
| 17* | N852194 | | 2 | ARM | BRAS<br>BRACCIO | SCHARHEBEL<br>BRAZO |
| 18* | 852193 | | 2 | ARM | BRAS<br>BRACCIO | SCHARHEBEL<br>BRAZO |
| 19* | 70917373 | 5/8" | 8 | LOCK WASHER | RONDELLE FREIN<br>RONDELLA ARRESTO | SICHERUNGSRING<br>ARANDELA SEGURID |
| 20* | 70932665 | 5/8"-11 | 8 | NUT UNC | ECROU UNC<br>DADO UNC | MUTTER UNC<br>TUERCA UNC |
| 21* | 853780 | [A] | 1 | FRAME | BATI<br>TELAIO | RAHMEN<br>BASTIDOR |
| 21* | 853782 | [B] | 1 | FRAME | BATI<br>TELAIO | RAHMEN<br>BASTIDOR |
| 22* | W247824B | ▶ | 2 | PLATE | PLAQUE<br>PIASTRA | PLATTE<br>PLATO |
| 23* | 7701659 | 5/8"-11 X 2-1/2 | 2 | CAPSCREW | VIS BOUCHON<br>TAPPO A VITE | HUTSCHRAUBE<br>TORNILLO TAPON |

| Mainframe<br>Châssis Principal<br>Hauptrahmen<br>Telaio Principale<br>Bastidor Principal | 10-25 | Vertical Fold Frame<br>Châssis Rabattable<br>Falte Rahmen<br>Telaio Ribaltabile<br>Bastidor Abatible |
|---|---|---|

5-PM02-002-A

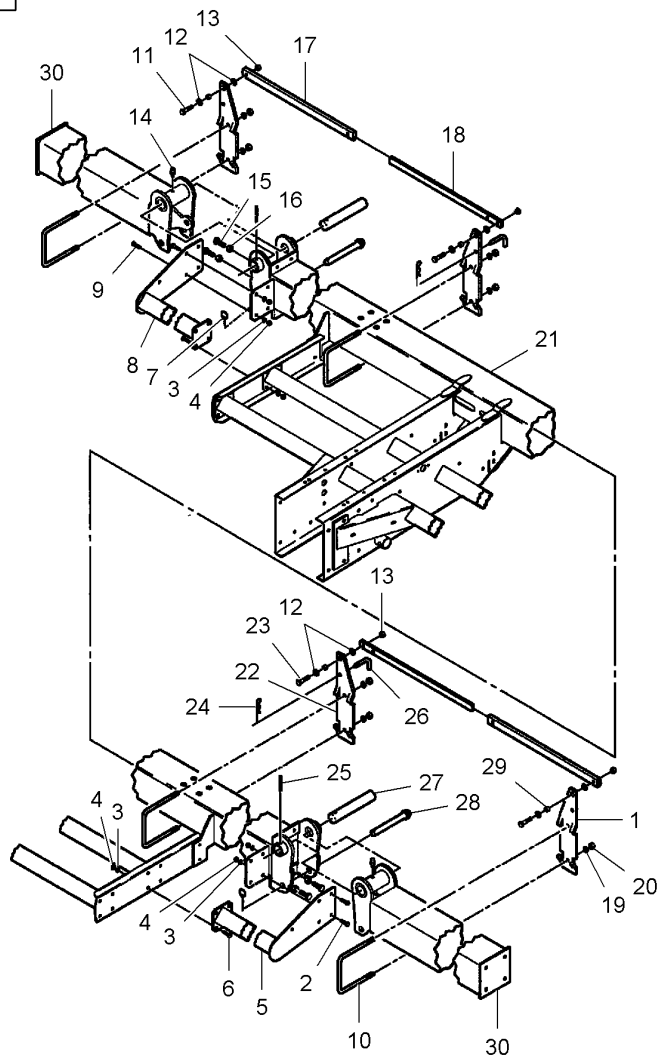


| | | | | | |
|---|---|---|---|---|---|
| 24* | 98-2107 | | 2 | HAIR PIN | EPINGLE<br>FORCINA | SICHERUNGSFEDER<br>RETENEDOR ELAST |
| 25* | N856874 | 1/2" X 2-1/2 | 2 | ROLL PIN | GOUPILLE ROULEE<br>SPINA ELASTICA | SPANNHUELSE<br>PASADOR ELASTICO |
| 26* | W237303B | | 2 | PIN | GOUPILLE<br>COPPIGLIA | STIFT<br>PASADOR |
| 27* | W232683B | 1"-3/4 X 9-7/8 | 2 | PIN | GOUPILLE<br>COPPIGLIA | STIFT<br>PASADOR |
| 28* | W232685B | 1" X 8-3/4 | 2 | PIN | GOUPILLE<br>COPPIGLIA | STIFT<br>PASADOR |
| 29* | WRC6834 | | 4 | BUSH | BAGUE<br>BOCCOLA | RING<br>CASQUILLO |
| 30* | W232674B | [A] | 2 | WING TIP | AILERON<br>ALERONE | FLUEGELSPITZE<br>ALERON |
| 30* | W232676B | [B] | 2 | WING TIP | AILERON<br>ALERONE | FLUEGELSPITZE<br>ALERON |

[A] 8 ROW NARROW
8 RANGS ETROITS
8 SCHMAL REIHE
8 LINEAS STRETTA
8 LINEAS ESTRECHO

[B] 12 ROW NARROW
12 RANGS ETROITS
12 SCHAMAL REIHE
12 LINEA STRETTA
12 LINEA ESTRECHO

**Wheels, Hub & Frame**
**Roues, Moyeu & Bâti**
**Räder, Radnabe & Rahmen**
**Ruote, Mozzo & Telaio**
**Ruedas, Cubo & Bastibor**

**10-30**

5-PM03-001-A

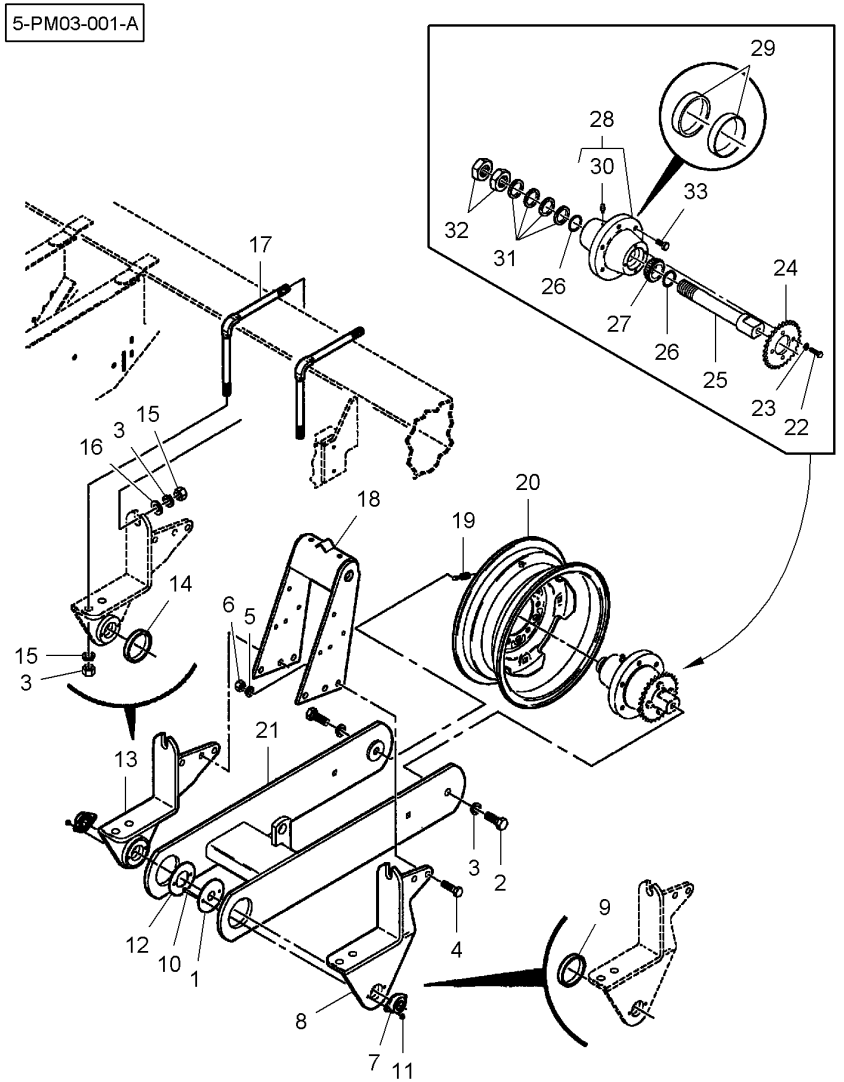


| | | | | | | |
|---|---|---|---|---|---|---|
| 1 | 851817 | | 1 | WASHER | RONDELLE<br>RONDELLA | SCHEIBE<br>ARANDELA |
| 2* | 70923292 | 3/4"-10 X 2 | 2 | CAPSCREW | VIS BOUCHON<br>TAPPO A VITE | HUTSCHRAUBE<br>TORNILLO TAPON |
| 3* | 70919332 | 3/4" | 6 | LOCK WASHER | RONDELLE FREIN<br>RONDELLA ARRESTO | SICHERUNGSRING<br>ARANDELA SEGURID |
| 4* | 70922664 | 5/8"-11 X 2 | 6 | BOLT UNC | BOULON UNC<br>BULLONE UNC | MASCH.SCHRB.UNC<br>PERNO UNC |
| 5* | 70917373 | 5/8" | 6 | LOCK WASHER | RONDELLE FREIN<br>RONDELLA ARRESTO | SICHERUNGSRING<br>ARANDELA SEGURID |
| 6* | 70932665 | 5/8"-11 | 6 | NUT UNC | ECROU UNC<br>DADO UNC | MUTTER UNC<br>TUERCA UNC |
| 7 | **W247647B** | | 2 | BEARING ASSY | ROULEMENT<br>CUSCINETTO COMPL | RADIALLAGER<br>RODAMIENTO RAD |
| 8 | N858468 | ◀ | 1 | TRUNNION | TOURILLON<br>CROCIERA | ZAPFEN<br>PERNO |
| 9 | N851816 | 8 | 1 | BUSH | BAGUE<br>BOCCOLA | RING<br>CASQUILLO |
| 10* | 70921962 | 1/4"-20 X 1-3/4 | 4 | BOLT UNC | BOULON UNC<br>BULLONE UNC | MASCH.SCHRB.UNC<br>PERNO UNC |
| 11 | 70923358 | 1/4"-20 | 4 | LOCKNUT | ECROU FREIN<br>AUTOBLOCCANTE | SICHERUNGSMUTTER<br>CONTRATUERCA |
| 12 | 851818 | | 1 | WASHER | RONDELLE<br>RONDELLA | SCHEIBE<br>ARANDELA |
| 13* | N858467 | ▶ | 1 | TRUNNION | TOURILLON<br>CROCIERA | ZAPFEN<br>PERNO |
| 14* | N851816 | 13 | 1 | BUSH | BAGUE<br>BOCCOLA | RING<br>CASQUILLO |
| 15* | 70913160 | 3/4"-10 | 4 | NUT UNC | ECROU UNC<br>DADO UNC | MUTTER UNC<br>TUERCA UNC |
| 16* | N12701 | 3/4" | 2 | WASHER | RONDELLE<br>RONDELLA | SCHEIBE<br>ARANDELA |
| 17* | 851364 | 3/4"-10 | 2 | BOLT | BOULON<br>BULLONE | BOLZEN<br>BULON |
| 18* | N856661 | | 1 | SUPPORT | SUPPORT<br>SOPPORTO | TRAGER<br>SOPORTE |
| 19* | 827410 | | 1 | VALVE | SOUPAPE<br>VALVOLA | VENTIL<br>VALVULA |
| 20* | 854949 | W15 X 6 | 1 | WHEEL | ROUE<br>RUOTA | RAD<br>RUEDA |
| 21* | N856658 | | 1 | ARM | BRAS<br>BRACCIO | SCHARHEBEL<br>BRAZO |
| 22* | 70920415 | 3/8"-16 X 1-1/4 | 4 | BOLT UNC | BOULON UNC<br>BULLONE UNC | MASCH.SCHRB.UNC<br>PERNO UNC |
| 23* | 70916965 | 3/8" | 4 | LOCK WASHER | RONDELLE FREIN<br>RONDELLA ARRESTO | SICHERUNGSRING<br>ARANDELA SEGURID |
| 24* | 854978 | 29 | 1 | SPROCKET | BARBOTIN<br>RUOTA MOTRICE | KETTENRAD<br>RUEDA DE CADENA |
| 25* | N857267 | | 1 | SPINDLE | FUSEE<br>FUSO DI GIRO | DREHZAPFEN<br>PIVOTE DE VOLTEO |
| 26* | **70924791** | | 2 | O RING | JOINT TORIQUE<br>GIUNTO DI TENUTA | O-RING<br>JUNTA TOROIDAL |

**Wheels, Hub & Frame**
**Roues, Moyeu & Bâti**
**Räder, Radnabe & Rahmen**
**Ruote, Mozzo & Telaio**
**Ruedas, Cubo & Bastibor**

**10-30**

5-PM03-001-A

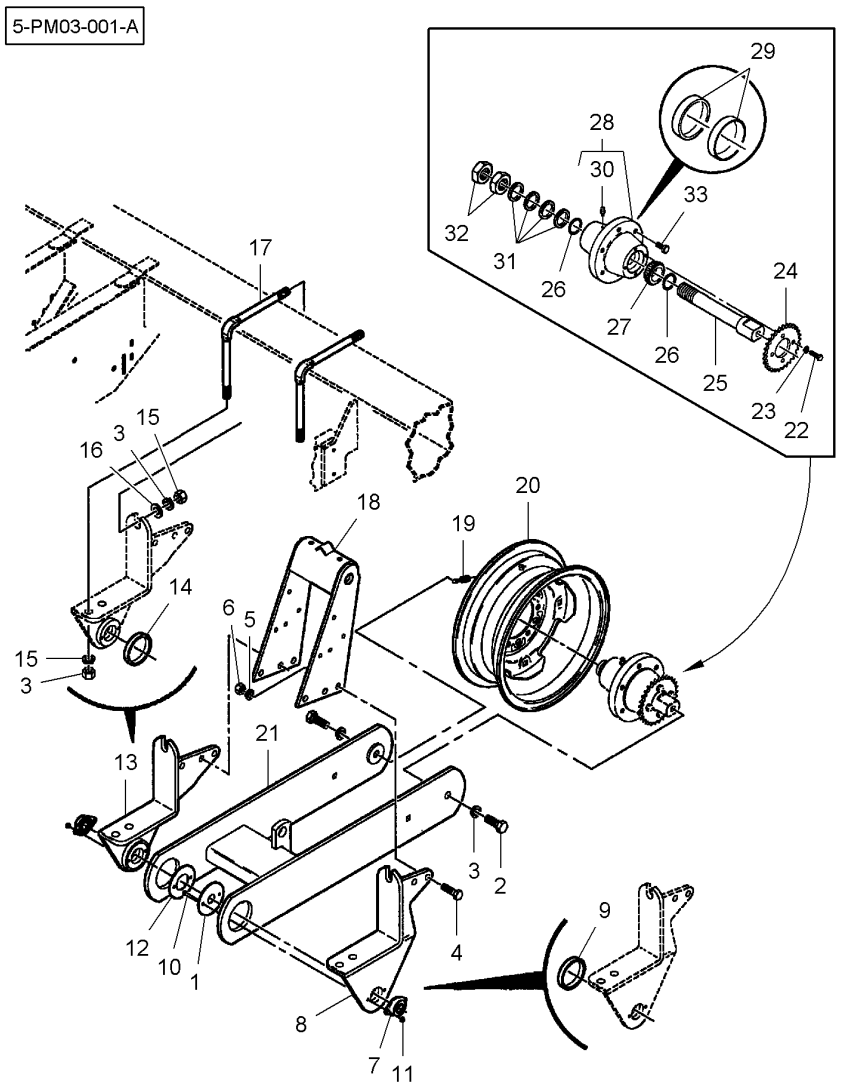


| | | | | | |
|---|---|---|---|---|---|
| 27* | **71127426** | | **2** BEARING CONE | CONE ROULEMENT<br>CONO CUSCINETTO | LAGERINNENRING<br>CONO COJINETE |
| 28* | 854986 | | **1** HUB | MOYEU<br>MOZZO | NABE<br>CUBO |
| 29* | **70937210** | 28 | **2** BEARING CUP | CUVETTE ROULEMNT<br>COPPA CUSCINETTO | LAGERAUSSENRING<br>ANILLO COJINETE |
| 30* | 70914465 | 28 | **1** GREASE FITTING | GRAISSEUR<br>INGRASSATORE | DRUCKSCHMIERKOPF<br>ENGRASADOR |
| 31* | **NK1783** | | **4** WASHER | RONDELLE<br>RONDELLA | SCHEIBE<br>ARANDELA |
| 32* | W915096-4 | | **2** NUT | ECROU<br>DADO | MUTTER<br>TUERCA |
| 33* | **26328** | 9/16"-18 | **6** BOLT UNF | BOULON UNF<br>BULLONE UNF | MASCH.SCHRB.UNF<br>PERNO UNF |

20

**Seed Meter Transmission**
**Transmission De Semence**
**Samen Übersendung**
**Trasmissione Di Seme**
**Transmisión De Semilla**

**20-5**

5-PL30-001-B

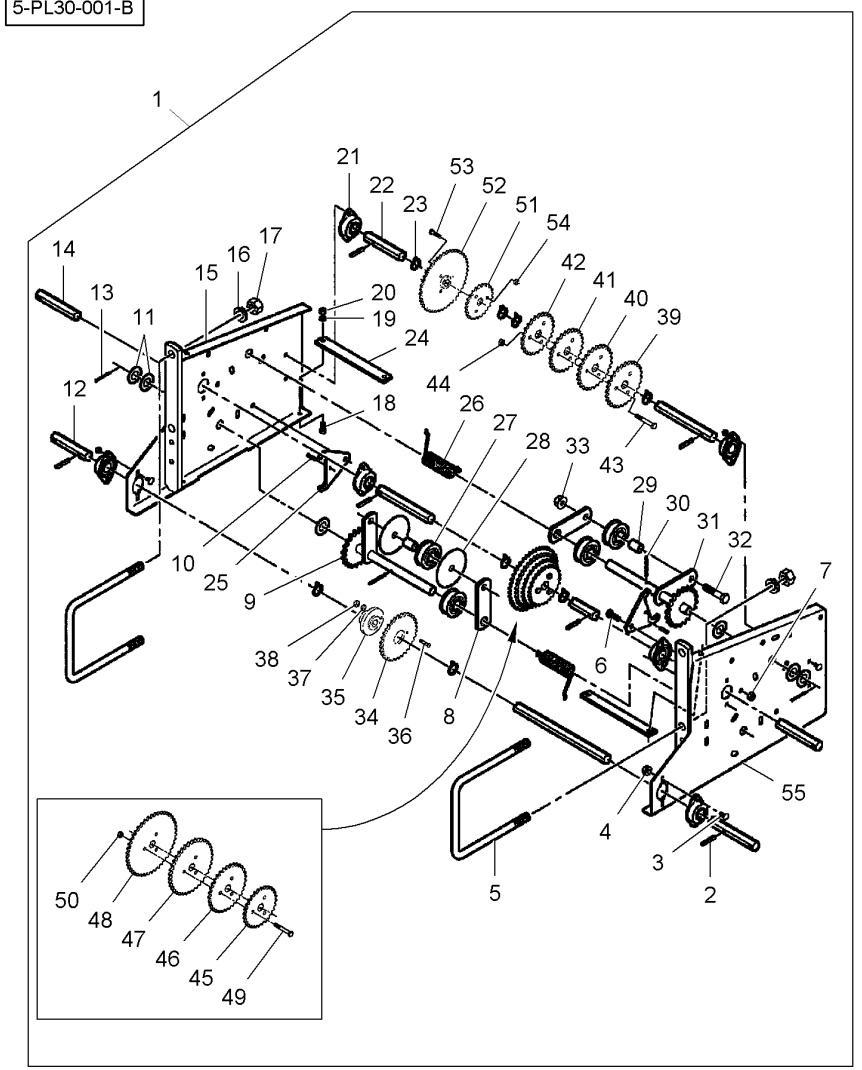


| | | | | | |
|---|---|---|---|---|---|
| 1* | 6100081 | | 1 | KIT, ATTACHMENT | JEU ACCESSOIRES<br>KIT ACCESSORI |
| 2* | N856873 | 1 5/16" X 1-1/2 | 6 | ROLL PIN | GOUPILLE ROULEE<br>SPINA ELASTICA |
| 3* | 364941X1 | 1 1/4"-20 X 1/2 | 12 | BOLT UNC | BOULON UNC<br>BULLONE UNC |
| 4* | 70923358 | 1 1/4"-20 | 12 | LOCKNUT | ECROU FREIN<br>AUTOBLOCCANTE |
| 5* | **W232588B** | [A]<br>5/8"-11 X 7-1/16 | 2 | U BOLT | ETRIER FILETE<br>BULLONE A STAFFA |
| 6* | 70921210 | 1 3/8"-16 X 1 | 2 | BOLT UNC | BOULON UNC<br>BULLONE UNC |
| 7* | 10163 | 1 3/8"-16 | 2 | LOCKNUT | ECROU FREIN<br>AUTOBLOCCANTE |
| 8* | W247780B | 1 | 2 | ARM | BRAS<br>BRACCIO |
| 9* | 853737 | 1 | 1 | TIGHTENER | TENSEUR<br>TENDITORE* |
| 10* | N856870 | 1 1/4" X 1 | 2 | ROLL PIN | GOUPILLE ROULEE<br>SPINA ELASTICA |
| 11* | 700717668 | 1 | 6 | WASHER | RONDELLE<br>RONDELLA |
| 12* | 851336 | 1 | 1 | SHAFT | ARBRE<br>ALBERO |
| 13* | 62232 | 1 3/16" X 1-1/4 | 2 | SPLIT PIN | GOUPILLE FENDUE<br>COPIGLIA |
| 14* | 854431 | 1 | 1 | SHAFT | ARBRE<br>ALBERO |
| 15* | 852179 | 1 ▶ | 1 | SUPPORT | SUPPORT<br>SOPPORTO |
| 16* | 70917373 | [A]<br>5/8" | 4 | LOCK WASHER | RONDELLE FREIN<br>RONDELLA ARRESTO |
| 17* | 70932665 | [A]<br>5/8"-11 | 4 | NUT UNC | ECROU UNC<br>DADO UNC |
| 18* | 70921332 | 1 5/16"-18 X 3/4 | 4 | BOLT UNC | BOULON UNC<br>BULLONE UNC |
| 19* | 70917356 | 1 5/16" | 4 | LOCK WASHER | RONDELLE FREIN<br>RONDELLA ARRESTO |
| 20* | Y704015 | 1 5/16"-18 | 4 | NUT UNC | ECROU UNC<br>DADO UNC |
| 21* | **W247647B** | 1 | 6 | BEARING ASSY | ROULEMENT<br>CUSCINETTO COMPL |
| 22* | 851305 | 1 | 1 | SHAFT | ARBRE<br>ALBERO |
| 23* | W247768B | 1 | 8 | CLAMP | COLLIER<br>FASCETTA |
| 24* | 851282 | 1 | 2 | STRAP | PATTE<br>CORREGGIA |
| 25* | 851180 | 1 | 2 | LATCH | VERROU<br>DENTE DI ARRESTO |
| 26* | 700717213 | 1 | 2 | SPRING | RESSORT<br>MOLLA |

SATZ ANBAUTEILE
JUEGO ACCESORIO
SPANNHUELSE
PASADOR ELASTICO
MASCH.SCHRB.UNC
PERNO UNC
SICHERUNGSMUTTER
CONTRATUERCA
BUEGELSCHRAUBE
BRIDA EN U
MASCH.SCHRB.UNC
PERNO UNC
SICHERUNGSMUTTER
CONTRATUERCA
SCHARHEBEL
BRAZO
SPANNROLLE
TENSADOR
SPANNHUELSE
PASADOR ELASTICO
SCHEIBE
ARANDELA
WELLE
ARBOL
SPALTBOLZEN
PASADOR HENDIDO
WELLE
ARBOL
TRAGER
SOPORTE
SICHERUNGSRING
ARANDELA SEGURID
MUTTER UNC
TUERCA UNC
MASCH.SCHRB.UNC
PERNO UNC
SICHERUNGSRING
ARANDELA SEGURID
MUTTER UNC
TUERCA UNC
RADIALLAGER
RODAMIENTO RAD
WELLE
ARBOL
HALTESCHELLE
ABRAZADERA
LASCHE
FAJA
KLINKE
TOPE
FEDER
MUELLE

**Seed Meter Transmission**
**Transmission De Semence**
**Samen Übersendung**
**Trasmissione Di Seme**
**Transmisión De Semilla**

**20-5**

5-PL30-001-B

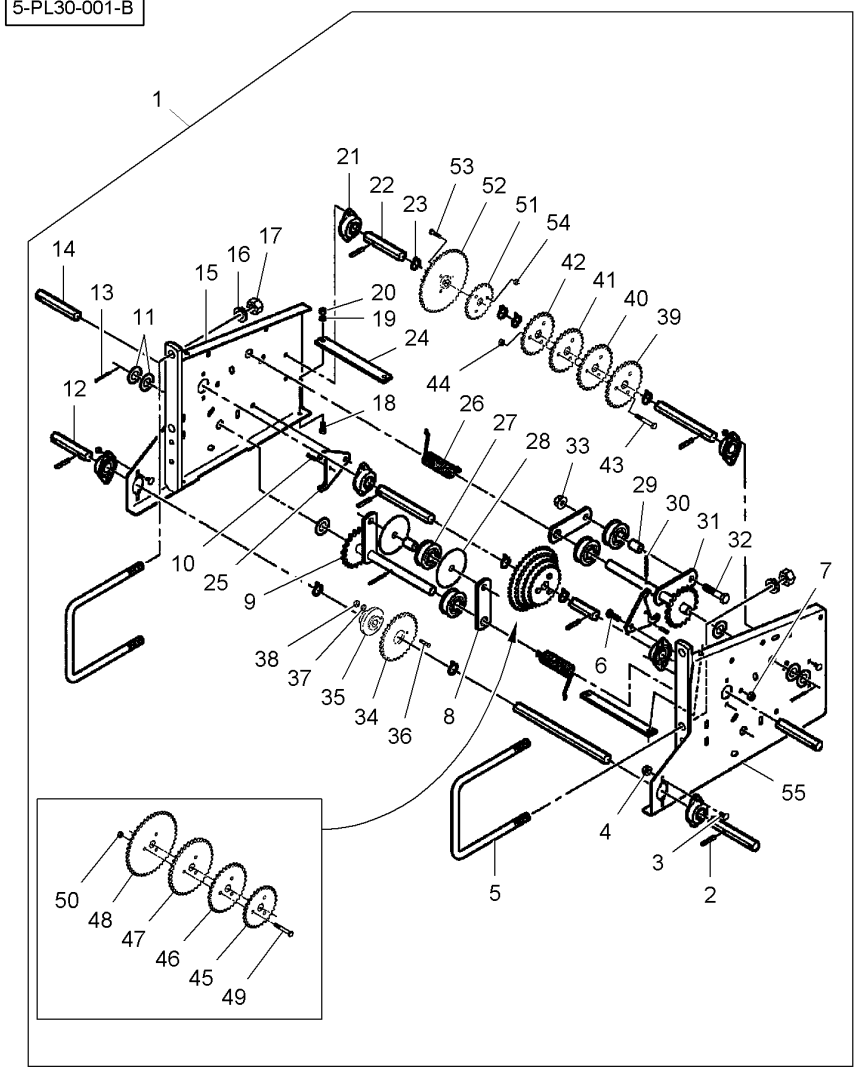


| | | | | | |
|---|---|---|---|---|---|
| 27* | **853932** | 1 | **4** | ROLLER | GALET<br>ROTELLA |
| 28* | W248361B | 1 | **2** | SHIELD | TOLE<br>RIPARO |
| 29* | WSP1344 | 1 | **2** | SPACER | ENTRETOISE<br>DISTANZIALE |
| 30* | N856871 | 1 1/4" X 2 | **2** | ROLL PIN | GOUPILLE ROULEE<br>SPINA ELASTICA |
| 31* | 853738 | 1 | **1** | TIGHTENER | TENSEUR<br>TENDITORE* |
| 32* | 70922645 | 1 1/2"-13 X 2-1/4 | **2** | BOLT UNC | BOULON UNC<br>BULLONE UNC |
| 33* | W915793-4 | 1 1/2"-13 | **2** | LOCKNUT | ECROU FREIN<br>AUTOBLOCCANTE |
| 34* | W247685B | 1 32 | **1** | SPROCKET | BARBOTIN<br>RUOTA MOTRICE |
| 35* | W247684B | 1 | **1** | HUB | MOYEU<br>MOZZO |
| 36* | 70052 | 1 1/4"-20 X 1 | **1** | SCREW | VIS<br>VITE |
| 37* | 705012 | 1 1/4" | **1** | LOCK WASHER | RONDELLE FREIN<br>RONDELLA ARRESTO |
| 38* | 70916622 | 1 1/4"-20 | **1** | NUT UNC | ECROU UNC<br>DADO UNC |
| 39* | 851764 | 1 28 | **1** | SPROCKET | BARBOTIN<br>RUOTA MOTRICE |
| 40* | 851763 | 1 27 | **1** | SPROCKET | BARBOTIN<br>RUOTA MOTRICE |
| 41* | 851762 | 1 26 | **1** | SPROCKET | BARBOTIN<br>RUOTA MOTRICE |
| 42* | 852086 | 1 25 | **1** | SPROCKET | BARBOTIN<br>RUOTA MOTRICE |
| 43* | 70921160 | 1 5/16"-18 X 2-1/4 | **3** | BOLT UNC | BOULON UNC<br>BULLONE UNC |
| 44* | Y704015 | 1 5/16"-18 | **3** | NUT UNC | ECROU UNC<br>DADO UNC |
| 45* | 851764 | 1 28 | **1** | SPROCKET | BARBOTIN<br>RUOTA MOTRICE |
| 46* | 851765 | 1 33 | **1** | SPROCKET | BARBOTIN<br>RUOTA MOTRICE |
| 47* | 851767 | 1 38 | **1** | SPROCKET | BARBOTIN<br>RUOTA MOTRICE |
| 48* | 851769 | 1 44 | **1** | SPROCKET | BARBOTIN<br>RUOTA MOTRICE |
| 49* | 70921160 | 1 5/16"-18 X 2-1/4 | **3** | BOLT UNC | BOULON UNC<br>BULLONE UNC |
| 50* | Y704015 | 1 5/16"-18 | **3** | NUT UNC | ECROU UNC<br>DADO UNC |
| 51* | 852086 | 1 25 | **1** | SPROCKET | BARBOTIN<br>RUOTA MOTRICE |
| 52* | 851770 | 1 45 | **1** | SPROCKET | BARBOTIN<br>RUOTA MOTRICE |

**Seed Meter Transmission**
**Transmission De Semence**
**Samen Übersendung**
**Trasmissione Di Seme**
**Transmisión De Semilla**

**20-5**

5-PL30-001-B

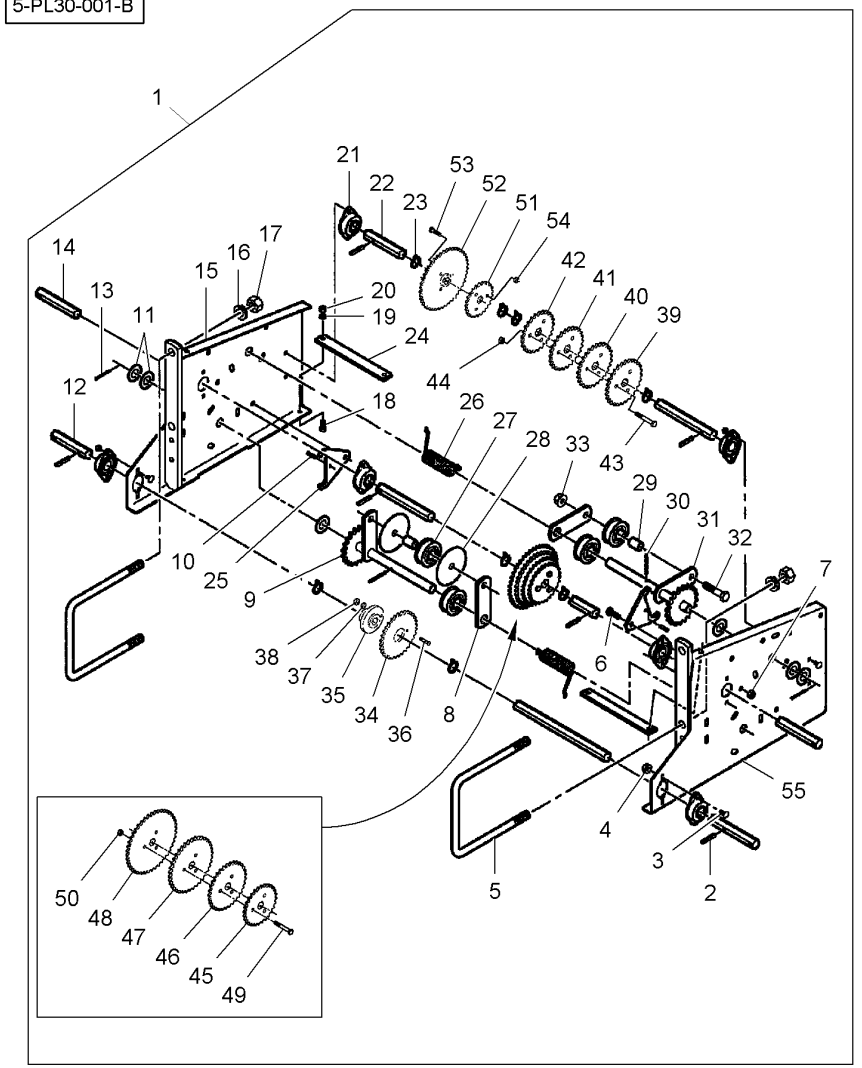


| | | | | | |
|---|---|---|---|---|---|
| 53* | 70921977 | 1 5/16"-18 X 1-1/4 | **3** CAPSCREW | VIS BOUCHON<br>TAPPO A VITE | HUTSCHRAUBE<br>TORNILLO TAPON |
| 54* | Y704015 | 1 5/16"-18 | **3** NUT UNC | ECROU UNC<br>DADO UNC | MUTTER UNC<br>TUERCA UNC |
| 55* | 852180 | 1 | **1** SUPPORT | SUPPORT<br>SOPPORTO | TRAGER<br>SOPORTE |

[A] NOT INCLUDED IN ASSEMBLY
N'EST PAS COMPRIS DANS L'ENSEMBLE
NICHT IN MONTAGEGRUPPE ENTHALTEN IST
NON E COMPRESO IN COMPLESSIVO
NO SE INCLUYE EN GRUPO MONAJE

**Link Belt**
**Chaînes De Transmission**
**Ubertragungskette**
**Catenas Di Trasmissione**
**Cadenas De Transmisión**

# 20-10

5-PL95-001-B

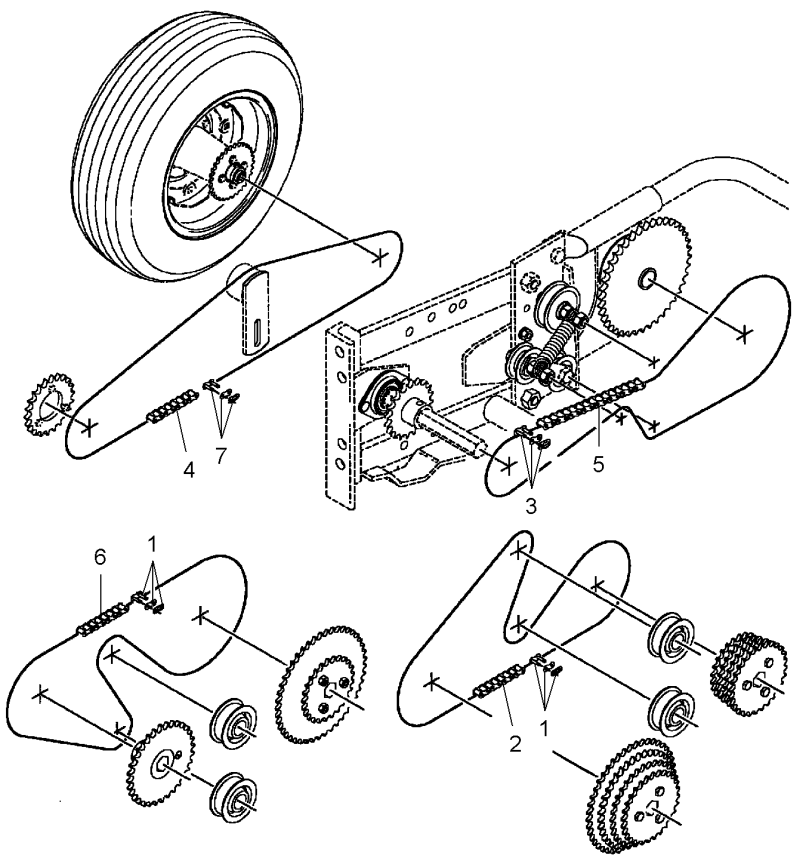


| | | | | | |
|---|---|---|---|---|---|
| 1* | 70915515 | No. 40 R/C | X | LINK | MAILLON<br>MAGLIA<br>GLIED<br>ESLABON |
| 2* | 854129 | No. 40<br>89 Pitches | X | CHAIN | CHAINE<br>CATENA<br>KETTE<br>CADENA |
| 2* | 7085988 | No. 40<br>10 Foot Bulk | 1 | ROLL OF CHAIN | ROULEAU CHAINE<br>RULLO PER CATENA<br>KETTE METERWARE<br>CADENA 5M |
| 3* | **70915002** | No. 41 R/C | X | LINK | MAILLON<br>MAGLIA<br>GLIED<br>ESLABON |
| 4* | 700725273 | No. 50<br>125 Pitches | X | CHAIN | CHAINE<br>CATENA<br>KETTE<br>CADENA |
| 4* | **70921049** | No. 50<br>10 Foot Bulk | 1 | ROLL OF CHAIN | ROULEAU CHAINE<br>RULLO PER CATENA<br>KETTE METERWARE<br>CADENA 5M |
| 5* | N859064 | No. 41<br>115 Pitches | X | CHAIN | CHAINE<br>CATENA<br>KETTE<br>CADENA |
| 5* | 70921048 | No. 41<br>10 Foot Bulk | 1 | ROLL OF CHAIN | ROULEAU CHAINE<br>RULLO PER CATENA<br>KETTE METERWARE<br>CADENA 5M |
| 6* | 854128 | No. 40<br>121 Pitches | X | CHAIN | CHAINE<br>CATENA<br>KETTE<br>CADENA |
| 6* | 7085988 | No. 40<br>10 Foot Bulk | 1 | ROLL OF CHAIN | ROULEAU CHAINE<br>RULLO PER CATENA<br>KETTE METERWARE<br>CADENA 5M |
| 7* | **70913682** | No. 50 R/C | X | CHAIN LINK | MAILLON CHAINE<br>MAGLIA OI CONNES<br>KETTENGLIED<br>ESLABON D CADENA |

**Transmission Shaft**
**Arbre De Transmission**
**Ubertragungswelle**
**Albero Di Trasmissione**
**Eje De Transmisión**

**20-15**

**3 Rows With 1,5 M Spacing**
**3 Rangs Avec Espacement 1,5 M**
**3 Reihe Mit Abstand 1,5 M**
**3 Lineas Con Distanziamento 1,5 M**
**3 Lineas Con Espaciamiento 1,5 M**

5-PL29-001-B

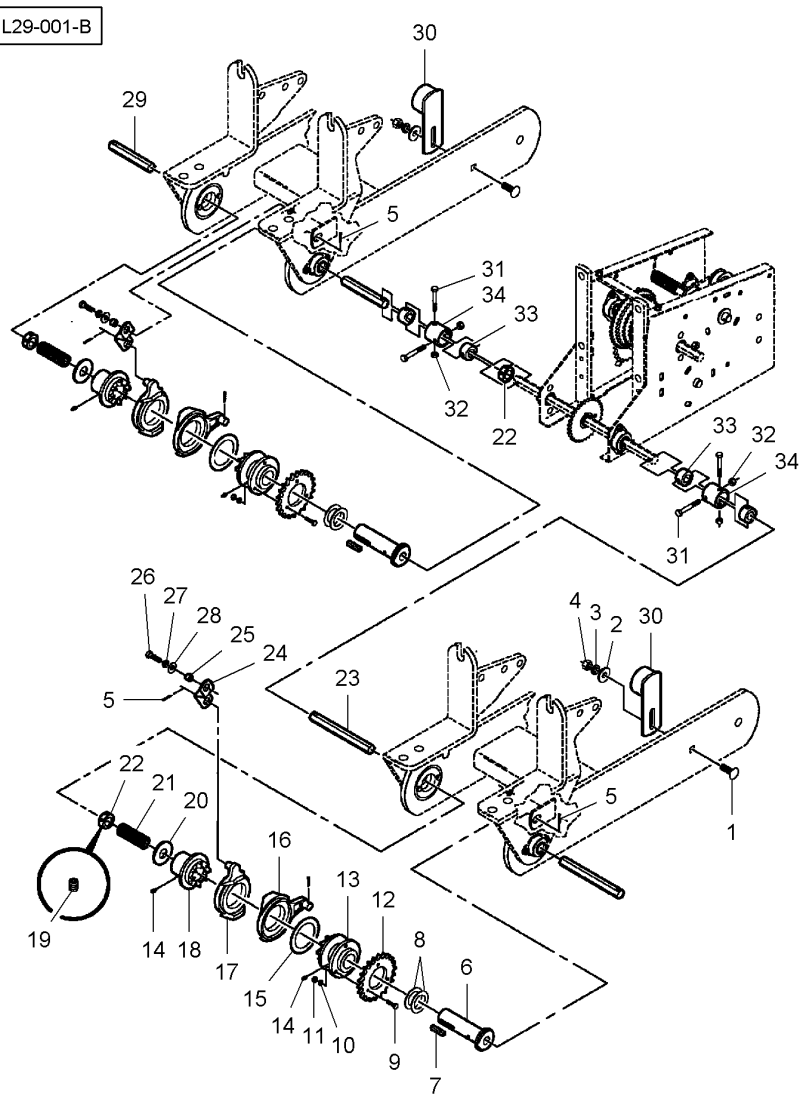


| | | | | | |
|---|---|---|---|---|---|
| 1* | 70926838 | 1/2"-13 X 1-1/2 | 2 | BOLT UNC | BOULON UNC<br>BULLONE UNC<br>MASCH.SCHRB.UNC<br>PERNO UNC |
| 2 | 70918431 | 1/2" | 2 | FLAT WASHER | RONDELLE PLATE<br>RONDELLE PIANA<br>UNTERLEGSCHEIBEN<br>ARANDELA PLANA |
| 3* | Y705046 | 1/2" | 2 | LOCK WASHER | RONDELLE FREIN<br>RONDELLA ARRESTO<br>SICHERUNGSRING<br>ARANDELA SEGURID |
| 4* | 704031 | 1/2"-13 | 2 | NUT UNC | ECROU UNC<br>DADO UNC<br>MUTTER UNC<br>TUERCA UNC |
| 5* | 62117 | 1/8" X 1-1/4 | 2 | PIN | GOUPILLE<br>COPPIGLIA<br>STIFT<br>PASADOR |
| 6* | **851238** | | 2 | SLEEVE | MANCHON<br>MANICOTTO<br>HUELSE<br>MANGUITO |
| 7* | **11335** | | 2 | KEY | CLAVETTE<br>CHIAVETTA<br>STELLKEIL<br>CHAVETA |
| 8* | **10487** | | 4 | WASHER | RONDELLE<br>RONDELLA<br>SCHEIBE<br>ARANDELA |
| 9* | 70927401 | 1/4"-20 X 1 | 6 | CAPSCREW | VIS BOUCHON<br>TAPPO A VITE<br>HUTSCHRAUBE<br>TORNILLO TAPON |
| 10* | 705012 | 1/4" | 6 | LOCK WASHER | RONDELLE FREIN<br>RONDELLA ARRESTO<br>SICHERUNGSRING<br>ARANDELA SEGURID |
| 11* | 70916622 | 1/4"-20 | 6 | NUT UNC | ECROU UNC<br>DADO UNC<br>MUTTER UNC<br>TUERCA UNC |
| 12* | N858629 | 22 | 2 | SPROCKET | BARBOTIN<br>RUOTA MOTRICE<br>KETTENRAD<br>RUEDA DE CADENA |
| 13* | **N858628** | | 2 | HUB | MOYEU<br>MOZZO<br>NABE<br>CUBO |
| 14* | 70914465 | 1/8"-27 | 4 | GREASE FITTING | GRAISSEUR<br>INGRASSATORE<br>DRUCKSCHMIERKOPF<br>ENGRASADOR |
| 15* | **WM6256** | | 2 | WASHER | RONDELLE<br>RONDELLA<br>SCHEIBE<br>ARANDELA |
| 16* | **WS1026** | | 2 | ARM | BRAS<br>BRACCIO<br>SCHARHEBEL<br>BRAZO |
| 17* | **WS988** | | 2 | CLUTCH | EMBRAYAGE<br>FRIZIONE<br>SCHALTKUPPLUNG<br>EMBRAGUE |
| 18* | **851009** | | 2 | HUB | MOYEU<br>MOZZO<br>NABE<br>CUBO |
| 19* | 70911712 | 22 5/16"-18 X 5/16 | 2 | SETSCREW | VIS DE BLOCAGE<br>INSIEME VITI<br>STELLSCHRAUBE<br>SET SCREW |
| 20* | 700709608 | | 2 | WASHER | RONDELLE<br>RONDELLA<br>SCHEIBE<br>ARANDELA |
| 21* | **W247680B** | | 2 | COMP.SPRING | RESSORT DE COMPR<br>MOLLA COMPOSTA<br>DRUCKFEDER<br>RESORTE DE COMP. |
| 22* | **W247234B** | | 3 | COLLAR | COLLERETTE<br>COLLARE<br>KRAGEN<br>COLLARIN |
| 23* | W248016B | ◀▶ 30"-1/2 | 1 | SHAFT | ARBRE<br>ALBERO<br>WELLE<br>ARBOL |
| 24* | W248000B | | 2 | STRAP | PATTE<br>CORREGGIA<br>LASCHE<br>FAJA |
| 25* | W247683B | | 2 | SPACER | ENTRETOISE<br>DISTANZIALE<br>ABSTANDSTUECK<br>DISCO ESPACIADOR |
| 26* | 70920415 | 3/8"-16 X 1-1/4 | 2 | BOLT UNC | BOULON UNC<br>BULLONE UNC<br>MASCH.SCHRB.UNC<br>PERNO UNC |

**Transmission Shaft**
**Arbre De Transmission**
**Ubertragungswelle**
**Albero Di Trasmissione**
**Eje De Transmisión**

**20-15**

**3 Rows With 1,5 M Spacing**
**3 Rangs Avec Espacement 1,5 M**
**3 Reihe Mit Abstand 1,5 M**
**3 Lineas Con Distanziamento 1,5 M**
**3 Lineas Con Espaciamiento 1,5 M**

5-PL29-001-B

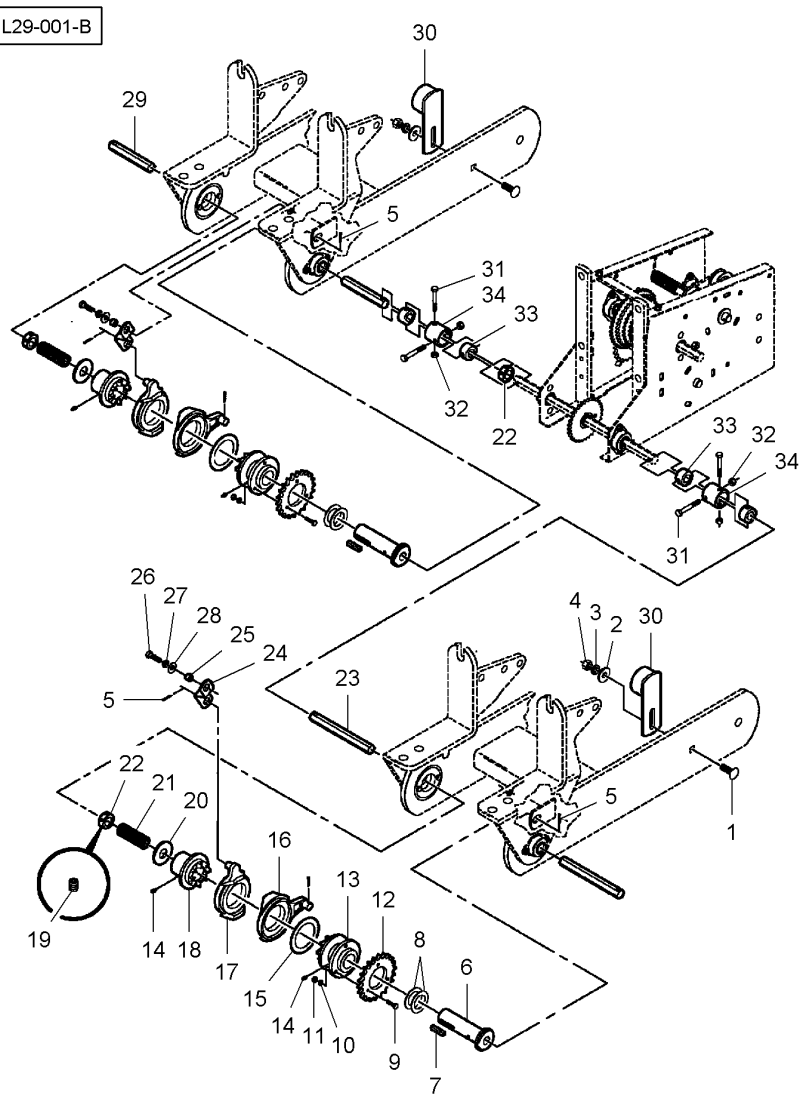


| | | | | | |
|---|---|---|---|---|---|
| 27* | 70916965 | 3/8" | **2** | LOCK WASHER | RONDELLE FREIN<br>RONDELLA ARRESTO |
| 28* | 70917378 | 3/8" | **2** | FLAT WASHER | RONDELLE PLATE<br>RONDELLE PIANA |
| 29* | 854436 | ◀▶ 30"-1/2 | **1** | SHAFT | ARBRE<br>ALBERO |
| 30* | N857262 | | **2** | TENSIONER | TENDEUR<br>TENDITORE |
| 31* | 70921160 | 5/16"-18 X 2-1/4 | **4** | BOLT UNC | BOULON UNC<br>BULLONE UNC |
| 32* | Y704163 | 5/16"-18 | **4** | LOCKNUT | ECROU FREIN<br>AUTOBLOCCANTE |
| 33* | **W247688B** | | **4** | ADAPTOR | ADAPTATEUR<br>ADATTATORE |
| 34* | **W247687B** | | **2** | COUPLING | CRABOT<br>ACCOPPIAMENTO |

SICHERUNGSRING
ARANDELA SEGURID
UNTERLEGSCHEIBEN
ARANDELA PLANA
WELLE
ARBOL
SPANNER
TENSOR
MASCH.SCHRB.UNC
PERNO UNC
SICHERUNGSMUTTER
CONTRATUERCA
REDUZIERNIPPEL
ADAPTADOR
KUPPLUNG
ACOPLAMIENTO

**Transmission Shaft**
**Arbre De Transmission**
**Ubertragungswelle**
**Albero Di Trasmissione**
**Eje De Transmisión**

**20-20**

**3 Rows With 2,3 M Spacing**
**3 Rangs Avec Espacement 2,3 M**
**3 Reihe Mit Abstand 2,3 M**
**3 Lineas Con Distanziamento 2,3 M**
**3 Lineas Con Espaciamiento 2,3 M**

5-PL29-002-B

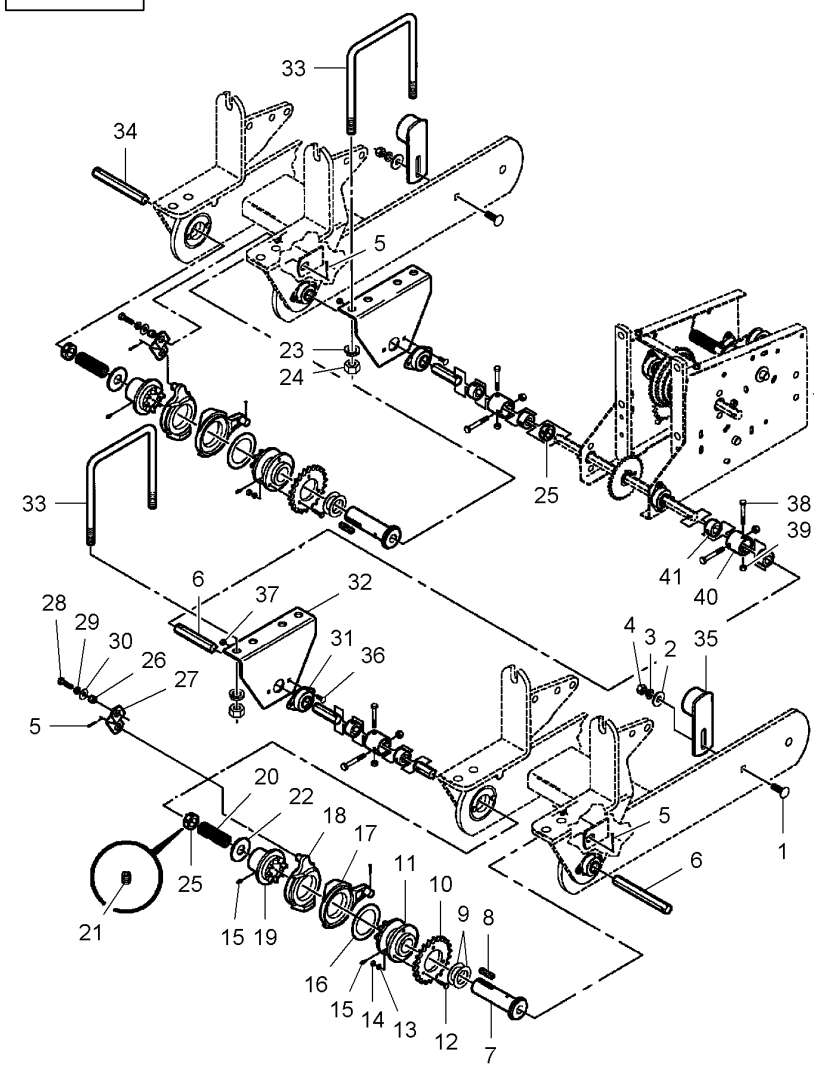


| | | | | | |
|---|---|---|---|---|---|
| 1* | 70926838 | 1/2"-13 X 1-1/2 | 2 | BOLT UNC | BOULON UNC<br>BULLONE UNC | MASCH.SCHRB.UNC<br>PERNO UNC |
| 2* | 70918431 | 1/2" | 2 | FLAT WASHER | RONDELLE PLATE<br>RONDELLE PIANA | UNTERLEGSCHEIBEN<br>ARANDELA PLANA |
| 3* | Y705046 | 1/2" | 2 | LOCK WASHER | RONDELLE FREIN<br>RONDELLA ARRESTO | SICHERUNGSRING<br>ARANDELA SEGURID |
| 4* | 704031 | 1/2"-13 | 2 | NUT UNC | ECROU UNC<br>DADO UNC | MUTTER UNC<br>TUERCA UNC |
| 5* | 62117 | 1/8" X 1-1/4 | 4 | PIN | GOUPILLE<br>COPPIGLIA | STIFT<br>PASADOR |
| 6* | W248016B | ◀▶ 60"-1/2 | 2 | SHAFT | ARBRE<br>ALBERO | WELLE<br>ARBOL |
| 7* | **851238** | | 1 | SLEEVE | MANCHON<br>MANICOTTO | HUELSE<br>MANGUITO |
| 8* | **11335** | | 2 | KEY | CLAVETTE<br>CHIAVETTA | STELLKEIL<br>CHAVETA |
| 9* | **10487** | | 4 | WASHER | RONDELLE<br>RONDELLA | SCHEIBE<br>ARANDELA |
| 10* | N858629 | 22 | 2 | SPROCKET | BARBOTIN<br>RUOTA MOTRICE | KETTENRAD<br>RUEDA DE CADENA |
| 11* | **N858628** | | 2 | HUB | MOYEU<br>MOZZO | NABE<br>CUBO |
| 12* | 70927401 | 1/4"-20 X 1 | 6 | CAPSCREW | VIS BOUCHON<br>TAPPO A VITE | HUTSCHRAUBE<br>TORNILLO TAPON |
| 13* | 705012 | 1/4" | 6 | LOCK WASHER | RONDELLE FREIN<br>RONDELLA ARRESTO | SICHERUNGSRING<br>ARANDELA SEGURID |
| 14* | 70916622 | 1/4"-20 | 6 | NUT UNC | ECROU UNC<br>DADO UNC | MUTTER UNC<br>TUERCA UNC |
| 15* | 70914465 | 1/8"-27 | 4 | GREASE FITTING | GRAISSEUR<br>INGRASSATORE | DRUCKSCHMIERKOPF<br>ENGRASADOR |
| 16* | **WM6256** | | 2 | WASHER | RONDELLE<br>RONDELLA | SCHEIBE<br>ARANDELA |
| 17* | **WS1026** | | 2 | ARM | BRAS<br>BRACCIO | SCHARHEBEL<br>BRAZO |
| 18* | **WS988** | | 2 | CLUTCH | EMBRAYAGE<br>FRIZIONE | SCHALTKUPPLUNG<br>EMBRAGUE |
| 19* | **851009** | | 2 | HUB | MOYEU<br>MOZZO | NABE<br>CUBO |
| 20* | **W247680B** | | 4 | COMP.SPRING | RESSORT DE COMPR<br>MOLLA COMPOSTA | DRUCKFEDER<br>RESORTE DE COMP. |
| 21* | 70911712 | 25 5/16"-18 X 5/16 | 2 | SETSCREW | VIS DE BLOCAGE<br>INSIEME VITI | STELLSCHRAUBE<br>SET SCREW |
| 22* | 700709608 | | 2 | WASHER | RONDELLE<br>RONDELLA | SCHEIBE<br>ARANDELA |
| 23* | 70917373 | 5/8" | 4 | LOCK WASHER | RONDELLE FREIN<br>RONDELLA ARRESTO | SICHERUNGSRING<br>ARANDELA SEGURID |
| 24* | 70932665 | 5/8"-11 | 4 | NUT UNC | ECROU UNC<br>DADO UNC | MUTTER UNC<br>TUERCA UNC |
| 25* | **W247234B** | | 3 | COLLAR | COLLERETTE<br>COLLARE | KRAGEN<br>COLLARIN |
| 26* | W247683B | | 2 | SPACER | ENTRETOISE<br>DISTANZIALE | ABSTANDSTUECK<br>DISCO ESPACIADOR |

**Transmission Shaft**
**Arbre De Transmission**
**Ubertragungswelle**
**Albero Di Trasmissione**
**Eje De Transmisión**

**20-20**

**3 Rows With 2,3 M Spacing**
**3 Rangs Avec Espacement 2,3 M**
**3 Reihe Mit Abstand 2,3 M**
**3 Lineas Con Distanziamento 2,3 M**
**3 Lineas Con Espaciamiento 2,3 M**

5-PL29-002-B

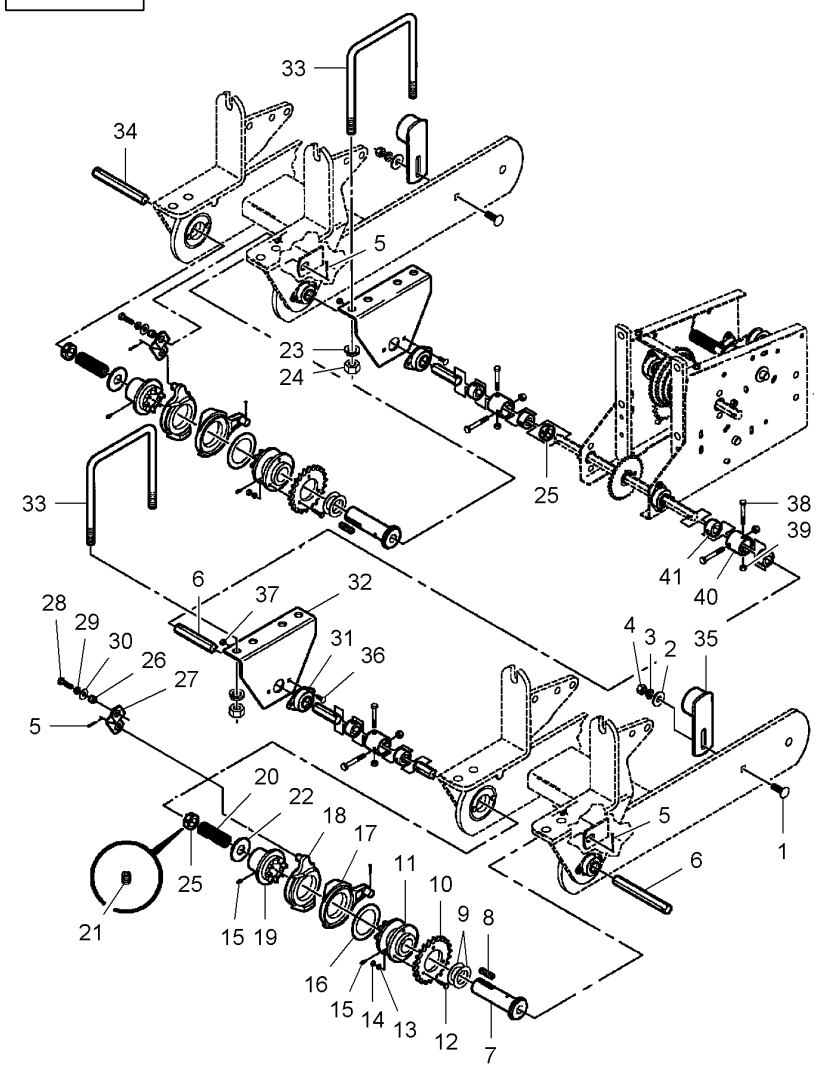


| | | | | | |
|---|---|---|---|---|---|
| 27* | W248000B | | 2 | STRAP | PATTE<br>CORREGGIA<br>FAJA |
| 28* | 70920415 | 3/8"-16 X 1-1/4 | 4 | BOLT UNC | BOULON UNC<br>BULLONE UNC<br>MASCH.SCHRB.UNC<br>PERNO UNC |
| 29* | 70916965 | 3/8" | 4 | LOCK WASHER | RONDELLE FREIN<br>RONDELLA ARRESTO<br>SICHERUNGSRING<br>ARANDELA SEGURID |
| 30* | 70917378 | 3/8" | 4 | FLAT WASHER | RONDELLE PLATE<br>RONDELLE PIANA<br>UNTERLEGSCHEIBEN<br>ARANDELA PLANA |
| 31* | **W247647B** | | 2 | BEARING ASSY | ROULEMENT<br>CUSCINETTO COMPL<br>RADIALLAGER<br>RODAMIENTO RAD |
| 32* | W247906B | | 2 | BRACKET | SUPPORT FIXATION<br>STAFFETTA<br>HALTEARM<br>SOPORTE |
| 33* | **W232588B** | 5/8"-11 X 7-1/16 | 2 | U BOLT | ETRIER FILETE<br>BULLONE A STAFFA<br>BUEGELSCHRAUBE<br>BRIDA EN U |
| 34* | W248018B | ◀▶ 88" | 1 | SHAFT | ARBRE<br>ALBERO<br>WELLE<br>ARBOL |
| 35* | N857262 | | 2 | TENSIONER | TENDEUR<br>TENDITORE<br>SPANNER<br>TENSOR |
| 36* | 364942X1 | 1/4"-20 X 5/8 | 4 | BOLT UNC | BOULON UNC<br>BULLONE UNC<br>MASCH.SCHRB.UNC<br>PERNO UNC |
| 37* | 70923358 | 1/4"-20 | 4 | LOCKNUT | ECROU FREIN<br>AUTOBLOCCANTE<br>SICHERUNGSMUTTER<br>CONTRATUERCA |
| 38* | 70921160 | 5/16"-18 X 2-1/4 | 6 | BOLT UNC | BOULON UNC<br>BULLONE UNC<br>MASCH.SCHRB.UNC<br>PERNO UNC |
| 39* | Y704163 | 5/16"-18 | 6 | LOCKNUT | ECROU FREIN<br>AUTOBLOCCANTE<br>SICHERUNGSMUTTER<br>CONTRATUERCA |
| 40* | **W247687B** | | 3 | COUPLING | CRABOT<br>ACCOPPIAMENTO<br>KUPPLUNG<br>ACOPLAMIENTO |
| 41* | **W247688B** | | 6 | ADAPTOR | ADAPTATEUR<br>ADATTATORE<br>REDUZIERNIPPEL<br>ADAPTADOR |

**Transmission Shaft**
**Arbre De Transmission**
**Ubertragungswelle**
**Albero Di Trasmissione**
**Eje De Transmisión**

**20-25**

**4 Row**
**4 Rangs**
**4 Reihes**
**4 Lineas**
**4 Lineas**

5-PL29-005-A

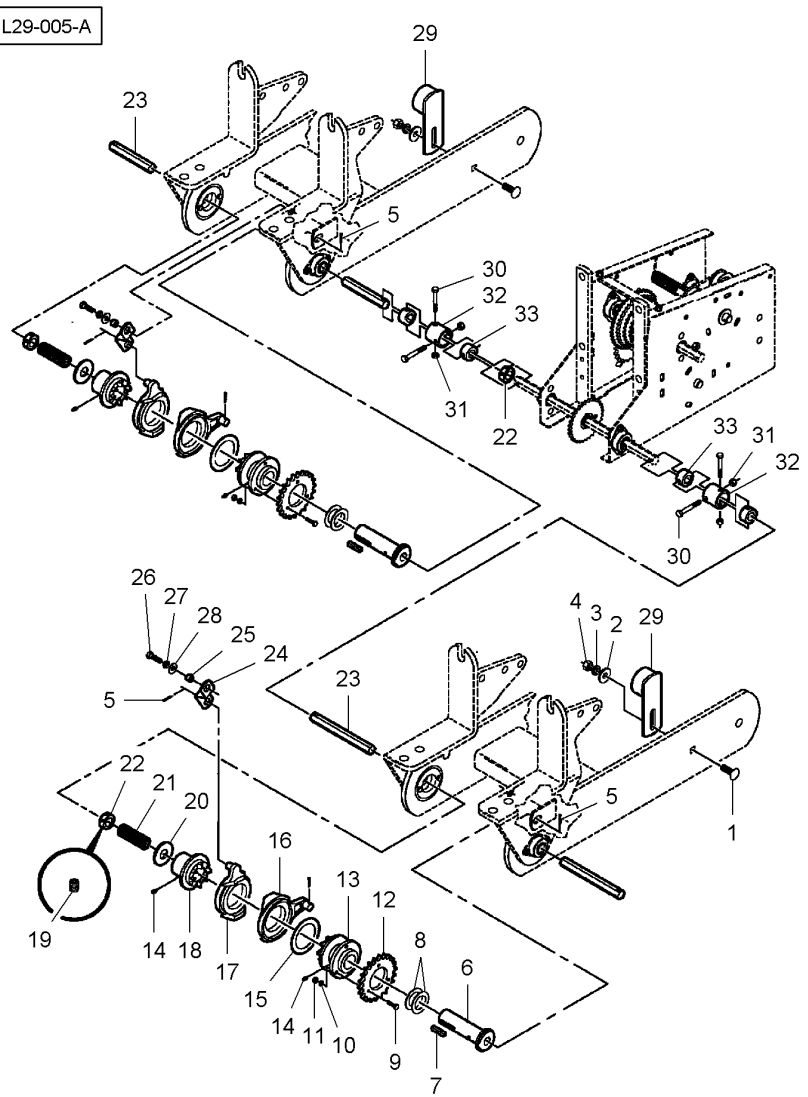


| | | | | | | |
|---|---|---|---|---|---|---|
| 1 | 70926838 | 1/2"-13 X 1-1/2 | **2** | BOLT UNC | BOULON UNC<br>BULLONE UNC | MASCH.SCHRB.UNC<br>PERNO UNC |
| 2 | 70918431 | 1/2" | **2** | FLAT WASHER | RONDELLE PLATE<br>RONDELLE PIANA | UNTERLEGSCHEIBEN<br>ARANDELA PLANA |
| 3 | Y705046 | 1/2" | **2** | LOCK WASHER | RONDELLE FREIN<br>RONDELLA ARRESTO | SICHERUNGSRING<br>ARANDELA SEGURID |
| 4 | 704031 | 1/2"-13 | **2** | NUT UNC | ECROU UNC<br>DADO UNC | MUTTER UNC<br>TUERCA UNC |
| 5* | 62117 | 1/8" X 1-1/4 | **4** | PIN | GOUPILLE<br>COPPIGLIA | STIFT<br>PASADOR |
| 6 | **851238** | | **2** | SLEEVE | MANCHON<br>MANICOTTO | HUELSE<br>MANGUITO |
| 7 | **11335** | | **2** | KEY | CLAVETTE<br>CHIAVETTA | STELLKEIL<br>CHAVETA |
| 8 | **10487** | | **4** | WASHER | RONDELLE<br>RONDELLA | SCHEIBE<br>ARANDELA |
| 9 | 70927401 | 1/4"-20 X 1 | **6** | CAPSCREW | VIS BOUCHON<br>TAPPO A VITE | HUTSCHRAUBE<br>TORNILLO TAPON |
| 10 | 705012 | 1/4" | **6** | LOCK WASHER | RONDELLE FREIN<br>RONDELLA ARRESTO | SICHERUNGSRING<br>ARANDELA SEGURID |
| 11 | 70916622 | 1/4"-20 | **6** | NUT UNC | ECROU UNC<br>DADO UNC | MUTTER UNC<br>TUERCA UNC |
| 12 | N858629 | 22 | **2** | SPROCKET | BARBOTIN<br>RUOTA MOTRICE | KETTENRAD<br>RUEDA DE CADENA |
| 13 | **N858628** | | **2** | HUB | MOYEU<br>MOZZO | NABE<br>CUBO |
| 14 | 70914465 | 1/8"-27 | **4** | GREASE FITTING | GRAISSEUR<br>INGRASSATORE | DRUCKSCHMIERKOPF<br>ENGRASADOR |
| 15 | **WM6256** | | **2** | WASHER | RONDELLE<br>RONDELLA | SCHEIBE<br>ARANDELA |
| 16 | **WS1026** | | **2** | ARM | BRAS<br>BRACCIO | SCHARHEBEL<br>BRAZO |
| 17 | **WS988** | | **2** | CLUTCH | EMBRAYAGE<br>FRIZIONE | SCHALTKUPPLUNG<br>EMBRAGUE |
| 18 | **851009** | | **2** | HUB | MOYEU<br>MOZZO | NABE<br>CUBO |
| 19 | 70911712 | 22 5/16"-18 X 5/16 | **2** | SETSCREW | VIS DE BLOCAGE<br>INSIEME VITI | STELLSCHRAUBE<br>SET SCREW |
| 20 | 700709608 | | **2** | WASHER | RONDELLE<br>RONDELLA | SCHEIBE<br>ARANDELA |
| 21 | **W247680B** | | **2** | COMP.SPRING | RESSORT DE COMPR<br>MOLLA COMPOSTA | DRUCKFEDER<br>RESORTE DE COMP. |
| 22 | **W247234B** | | **3** | COLLAR | COLLERETTE<br>COLLARE | KRAGEN<br>COLLARIN |
| 23* | W247693B | ◀▶ 44" | **1** | SHAFT | ARBRE<br>ALBERO | WELLE<br>ARBOL |
| 24 | W248000B | | **2** | STRAP | PATTE<br>CORREGGIA | LASCHE<br>FAJA |
| 25 | W247683B | | **2** | SPACER | ENTRETOISE<br>DISTANZIALE | ABSTANDSTUECK<br>DISCO ESPACIADOR |
| 26 | 70920415 | 3/8"-16 X 1-1/4 | **2** | BOLT UNC | BOULON UNC<br>BULLONE UNC | MASCH.SCHRB.UNC<br>PERNO UNC |

| Transmission Shaft<br>Arbre De Transmission<br>Ubertragungswelle<br>Albero Di Trasmissione<br>Eje De Transmisión | 20-25 | 4 Row<br>4 Rangs<br>4 Reihes<br>4 Lineas<br>4 Lineas |
|---|---|---|

5-PL29-005-A

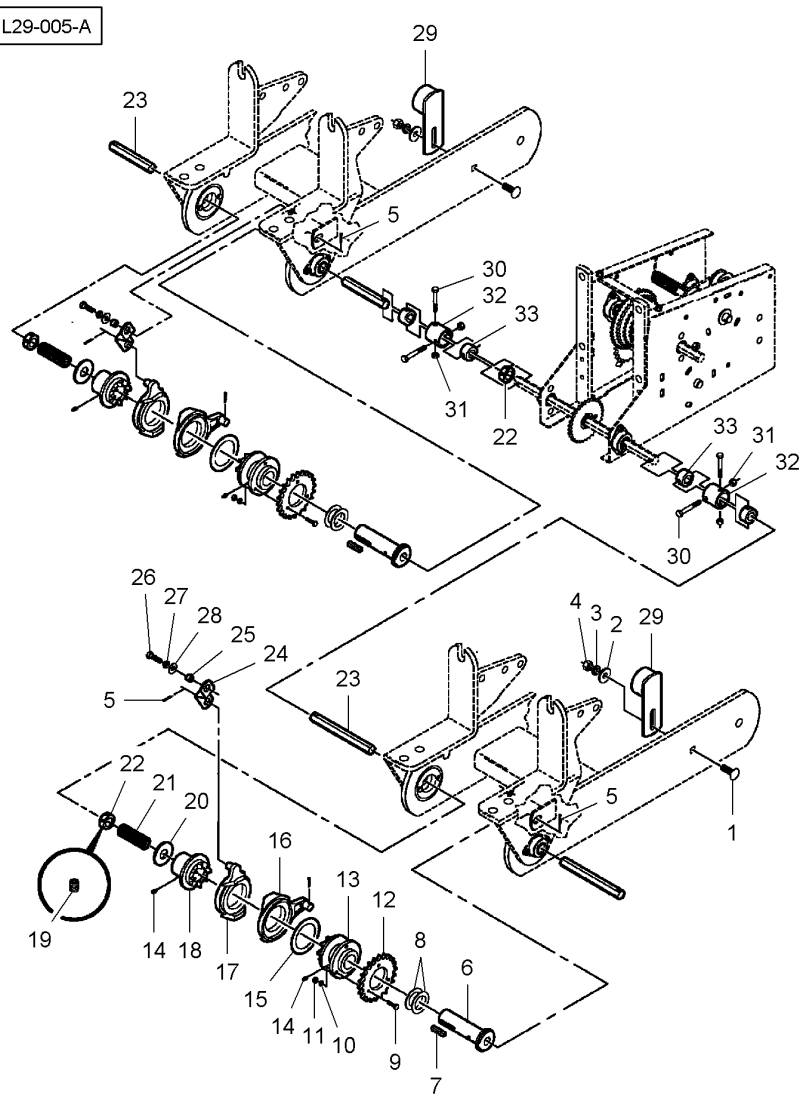


| | | | | | |
|---|---|---|---|---|---|
| 27 | 70916965 | 3/8" | **2** LOCK WASHER | RONDELLE FREIN<br>RONDELLA ARRESTO | SICHERUNGSRING<br>ARANDELA SEGURID |
| 28 | 70917378 | 3/8" | **2** FLAT WASHER | RONDELLE PLATE<br>RONDELLE PIANA | UNTERLEGSCHEIBEN<br>ARANDELA PLANA |
| 29* | N857262 | | **2** TENSIONER | TENDEUR<br>TENDITORE | SPANNER<br>TENSOR |
| 30* | 70921160 | 5/16"-18 X 2-1/4 | **4** BOLT UNC | BOULON UNC<br>BULLONE UNC | MASCH.SCHRB.UNC<br>PERNO UNC |
| 31* | Y704163 | 5/16"-18 | **4** LOCKNUT | ECROU FREIN<br>AUTOBLOCCANTE | SICHERUNGSMUTTER<br>CONTRATUERCA |
| 32* | **W247687B** | | **2** COUPLING | CRABOT<br>ACCOPPIAMENTO | KUPPLUNG<br>ACOPLAMIENTO |
| 33* | **W247688B** | | **4** ADAPTOR | ADAPTATEUR<br>ADATTATORE | REDUZIERNIPPEL<br>ADAPTADOR |

**Transmission Shaft**
**Arbre De Transmission**
**Ubertragungswelle**
**Albero Di Trasmissione**
**Eje De Transmisión**

**20-30**

**6 Rows - 8 Rows Narrow**
**6 Rangs - 8 Rangs Etroits**
**6 Reihe - 8 Schmal Reihe**
**6 Lineas - 8 Lineas Stretta**
**6 Lines - 8 Lineas Estrecho**

5-PL29-003-B

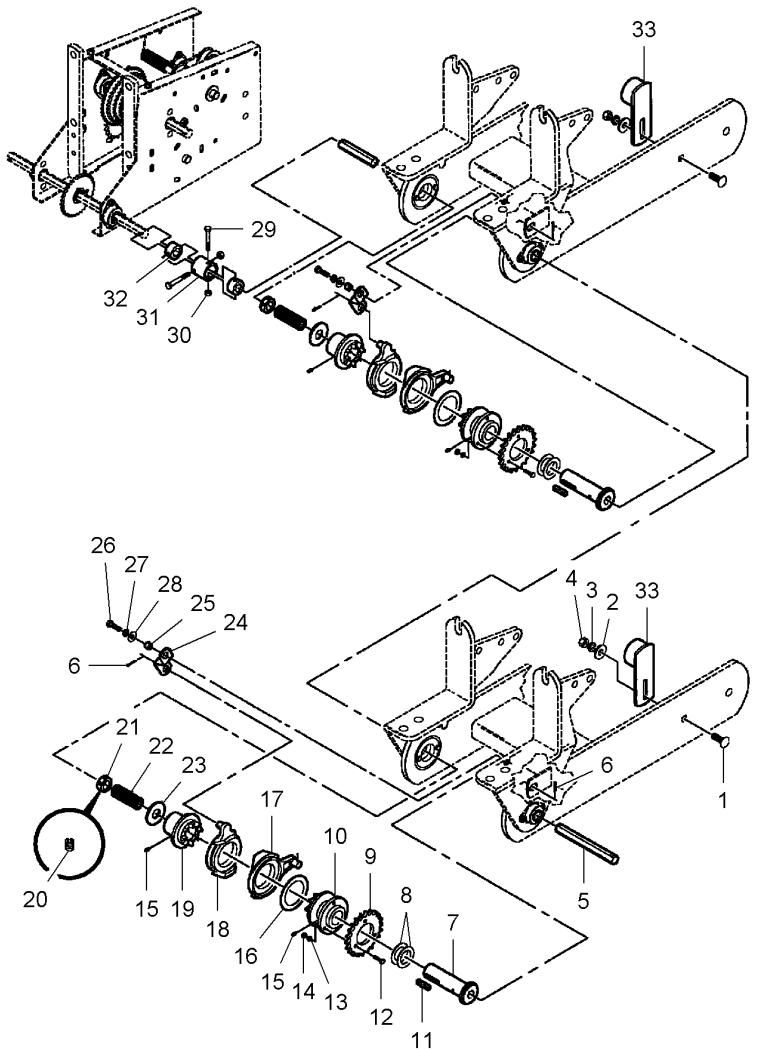


| | | | | | |
|---|---|---|---|---|---|
| 1* | 70926838 | 1/2"-13 X 1-1/2 | 4 | BOLT UNC | BOULON UNC<br>BULLONE UNC | MASCH.SCHRB.UNC<br>PERNO UNC |
| 2* | 70918431 | 1/2" | 4 | FLAT WASHER | RONDELLE PLATE<br>RONDELLE PIANA | UNTERLEGSCHEIBEN<br>ARANDELA PLANA |
| 3* | Y705046 | 1/2" | 4 | LOCK WASHER | RONDELLE FREIN<br>RONDELLA ARRESTO | SICHERUNGSRING<br>ARANDELA SEGURID |
| 4* | 704031 | 1/2"-13 | 4 | NUT UNC | ECROU UNC<br>DADO UNC | MUTTER UNC<br>TUERCA UNC |
| 5* | W248016B | [A]<br>◀▶ 60"-1/2 | 2 | SHAFT | ARBRE<br>ALBERO | WELLE<br>ARBOL |
| 5* | W248129B | [B]<br>◀▶ 82"-1/2 | 2 | SHAFT | ARBRE<br>ALBERO | WELLE<br>ARBOL |
| 5* | W247694B | [C]<br>◀<br>◀▶ 96"-1/2 | 1 | SHAFT | ARBRE<br>ALBERO | WELLE<br>ARBOL |
| 5* | W248018B | [C]<br>▶<br>◀▶ 88" | 1 | SHAFT | ARBRE<br>ALBERO | WELLE<br>ARBOL |
| 6* | 62117 | 1/8" X 1-1/4 | 8 | PIN | GOUPILLE<br>COPPIGLIA | STIFT<br>PASADOR |
| 7* | **851238** | | 4 | SLEEVE | MANCHON<br>MANICOTTO | HUELSE<br>MANGUITO |
| 8* | **10487** | | 8 | WASHER | RONDELLE<br>RONDELLA | SCHEIBE<br>ARANDELA |
| 9* | N858629 | 22 | 4 | SPROCKET | BARBOTIN<br>RUOTA MOTRICE | KETTENRAD<br>RUEDA DE CADENA |
| 10* | **N858628** | | 4 | HUB | MOYEU<br>MOZZO | NABE<br>CUBO |
| 11* | **11335** | | 4 | KEY | CLAVETTE<br>CHIAVETTA | STELLKEIL<br>CHAVETA |
| 12* | 70927401 | 1/4"-20 X 1 | 12 | CAPSCREW | VIS BOUCHON<br>TAPPO A VITE | HUTSCHRAUBE<br>TORNILLO TAPON |
| 13* | 705012 | 1/4" | 12 | LOCK WASHER | RONDELLE FREIN<br>RONDELLA ARRESTO | SICHERUNGSRING<br>ARANDELA SEGURID |
| 14* | 70916622 | 1/4"-20 | 12 | NUT UNC | ECROU UNC<br>DADO UNC | MUTTER UNC<br>TUERCA UNC |
| 15* | 70914465 | 1/8"-27 | 10 | GREASE FITTING | GRAISSEUR<br>INGRASSATORE | DRUCKSCHMIERKOPF<br>ENGRASADOR |
| 16* | **WM6256** | | 4 | WASHER | RONDELLE<br>RONDELLA | SCHEIBE<br>ARANDELA |
| 17* | **WS1026** | | 4 | ARM | BRAS<br>BRACCIO | SCHARHEBEL<br>BRAZO |
| 18* | **WS988** | | 4 | CLUTCH | EMBRAYAGE<br>FRIZIONE | SCHALTKUPPLUNG<br>EMBRAGUE |
| 19* | **851009** | | 4 | HUB | MOYEU<br>MOZZO | NABE<br>CUBO |
| 20* | 70911712 | 21 5/16"-18 X 5/16 | 1 | SETSCREW | VIS DE BLOCAGE<br>INSIEME VITI | STELLSCHRAUBE<br>SET SCREW |
| 21* | **W247234B** | | 4 | COLLAR | COLLERETTE<br>COLLARE | KRAGEN<br>COLLARIN |
| 22* | **W247680B** | | 4 | COMP.SPRING | RESSORT DE COMPR<br>MOLLA COMPOSTA | DRUCKFEDER<br>RESORTE DE COMP. |

| Transmission Shaft<br>Arbre De Transmission<br>Ubertragungswelle<br>Albero Di Trasmissione<br>Eje De Transmisión | 20-30 | 6 Rows - 8 Rows Narrow<br>6 Rangs - 8 Rangs Etroits<br>6 Reihe - 8 Schmal Reihe<br>6 Lineas - 8 Lineas Stretta<br>6 Lines - 8 Lineas Estrecho |
|---|---|---|

5-PL29-003-B

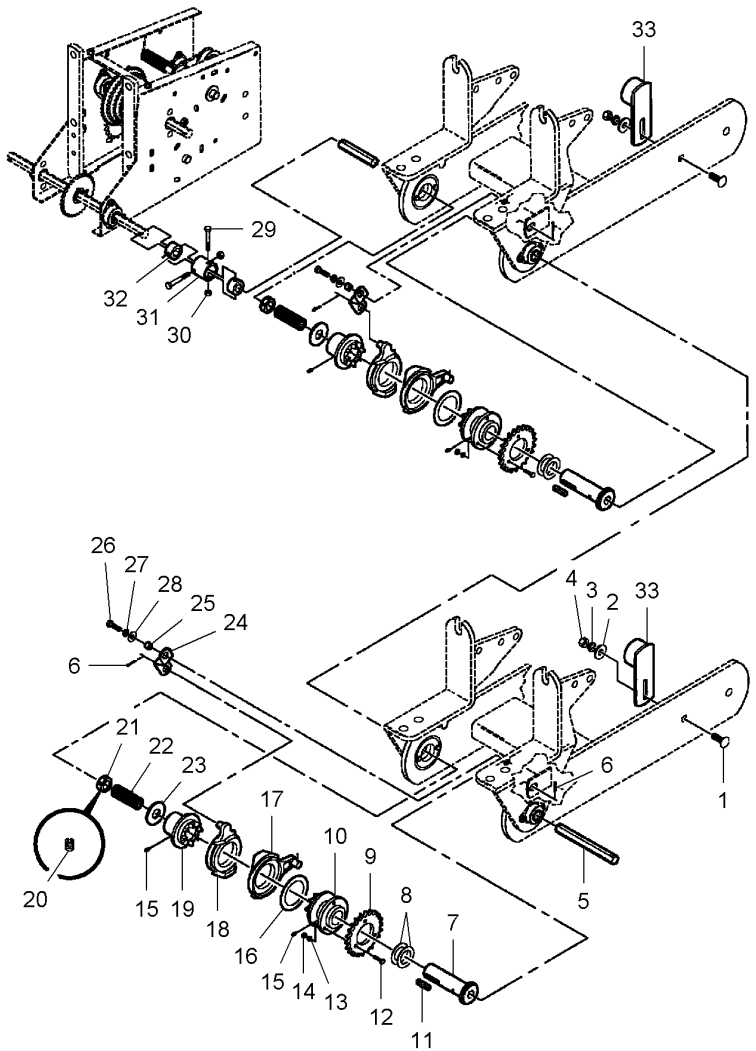


| | | | | | |
|---|---|---|---|---|---|
| 23* | 700709608 | | 4 | WASHER | RONDELLE<br>RONDELLA |
| 24* | W248000B | | 4 | STRAP | PATTE<br>CORREGGIA |
| 25* | W247683B | | 4 | SPACER | ENTRETOISE<br>DISTANZIALE |
| 26* | 70920415 | 3/8"-16 X 1-1/4 | 4 | BOLT UNC | BOULON UNC<br>BULLONE UNC |
| 27* | 70916965 | 3/8" | 4 | LOCK WASHER | RONDELLE FREIN<br>RONDELLA ARRESTO |
| 28* | 70917378 | 3/8" | 4 | FLAT WASHER | RONDELLE PLATE<br>RONDELLE PIANA |
| 29* | 70921160 | 5/16"-18 X 2-1/4 | 4 | BOLT UNC | BOULON UNC<br>BULLONE UNC |
| 30* | Y704163 | 5/16"-18 | 4 | LOCKNUT | ECROU FREIN<br>AUTOBLOCCANTE |
| 31* | **W247687B** | | 2 | COUPLING | CRABOT<br>ACCOPPIAMENTO |
| 32* | **W247688B** | | 4 | ADAPTOR | ADAPTATEUR<br>ADATTATORE |
| 33* | N857262 | | 4 | TENSIONER | TENDEUR<br>TENDITORE |

SCHEIBE
ARANDELA
LASCHE
FAJA
ABSTANDSTUECK
DISCO ESPACIADOR
MASCH.SCHRB.UNC
PERNO UNC
SICHERUNGSRING
ARANDELA SEGURID
UNTERLEGSCHEIBEN
ARANDELA PLANA
MASCH.SCHRB.UNC
PERNO UNC
SICHERUNGSMUTTER
CONTRATUERCA
KUPPLUNG
ACOPLAMIENTO
REDUZIERNIPPEL
ADAPTADOR
SPANNER
TENSOR

[A] 6 ROW NARROW
6 RANGS ETROITS
6 SCHMAL REIHE
6 LINEAS STRETTA
6 LINEAS ESTRECHO

[B] 6 ROW WIDE
6 RANGS LARGES
6 BREITE REIHE
6 LINEAS LARGA
6 LINEAS ANCHA

[C] 8 ROW NARROW
8 RANGS ETROITS
8 SCHMAL REIHE
8 LINEAS STRETTA
8 LINEAS ESTRECHO

**Transmission Shaft**
**Arbre De Transmission**
**Ubertragungswelle**
**Albero Di Trasmissione**
**Eje De Transmisión**

**20-35**

**8 Rows Narrow - Vertical Fold Frame**
**8 Rangs Etroits - Châssis Rabattable**
**8 Schmal Reihes - Falte Rahmen**
**8 Lineas Stretta - Telaio Ribaltabile**
**8 Lineas Estrecho - Bastidor Abatible**

5-PL29-006-A

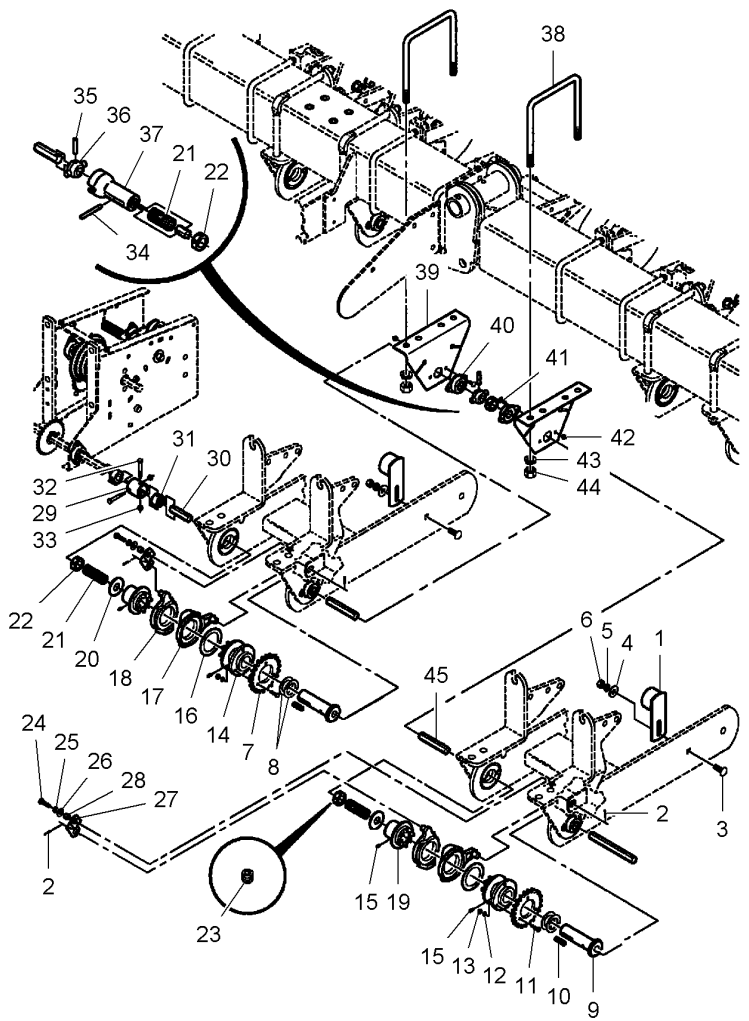


| | | | | | |
|---|---|---|---|---|---|
| 1* | W247751B | | 4 | TIGHTENER | TENSEUR<br>TENDITORE* | SPANNROLLE<br>TENSADOR |
| 2* | 62117 | 1/8" X 1-1/4 | 8 | PIN | GOUPILLE<br>COPPIGLIA | STIFT<br>PASADOR |
| 3* | 70926838 | 1/2"-13 X 1-1/2 | 4 | BOLT UNC | BOULON UNC<br>BULLONE UNC | MASCH.SCHRB.UNC<br>PERNO UNC |
| 4* | 70918431 | 1/2" | 4 | FLAT WASHER | RONDELLE PLATE<br>RONDELLE PIANA | UNTERLEGSCHEIBEN<br>ARANDELA PLANA |
| 5* | Y705046 | 1/2" | 4 | LOCK WASHER | RONDELLE FREIN<br>RONDELLA ARRESTO | SICHERUNGSRING<br>ARANDELA SEGURID |
| 6* | 704031 | 1/2"-13 | 4 | NUT UNC | ECROU UNC<br>DADO UNC | MUTTER UNC<br>TUERCA UNC |
| 7* | N858629 | 22 | 4 | SPROCKET | BARBOTIN<br>RUOTA MOTRICE | KETTENRAD<br>RUEDA DE CADENA |
| 8* | **10487** | | 8 | WASHER | RONDELLE<br>RONDELLA | SCHEIBE<br>ARANDELA |
| 9* | **851238** | | 4 | SLEEVE | MANCHON<br>MANICOTTO | HUELSE<br>MANGUITO |
| 10* | **11335** | | 4 | KEY | CLAVETTE<br>CHIAVETTA | STELLKEIL<br>CHAVETA |
| 11* | 70927401 | 1/4"-20 X 1 | 12 | CAPSCREW | VIS BOUCHON<br>TAPPO A VITE | HUTSCHRAUBE<br>TORNILLO TAPON |
| 12* | 705012 | 1/4" | 12 | LOCK WASHER | RONDELLE FREIN<br>RONDELLA ARRESTO | SICHERUNGSRING<br>ARANDELA SEGURID |
| 13* | 70916622 | 1/4"-20 | 12 | NUT UNC | ECROU UNC<br>DADO UNC | MUTTER UNC<br>TUERCA UNC |
| 14* | **N858628** | | 6 | HUB | MOYEU<br>MOZZO | NABE<br>CUBO |
| 15* | 70914465 | 1/8"-27 | 8 | GREASE FITTING | GRAISSEUR<br>INGRASSATORE | DRUCKSCHMIERKOPF<br>ENGRASADOR |
| 16* | **WM6256** | | 4 | WASHER | RONDELLE<br>RONDELLA | SCHEIBE<br>ARANDELA |
| 17* | **WS1026** | | 4 | ARM | BRAS<br>BRACCIO | SCHARHEBEL<br>BRAZO |
| 18* | **WS988** | | 4 | CLUTCH | EMBRAYAGE<br>FRIZIONE | SCHALTKUPPLUNG<br>EMBRAGUE |
| 19* | **851009** | | 4 | HUB | MOYEU<br>MOZZO | NABE<br>CUBO |
| 20* | 700709608 | | 4 | WASHER | RONDELLE<br>RONDELLA | SCHEIBE<br>ARANDELA |
| 21* | **W247680B** | | 6 | COMP.SPRING | RESSORT DE COMPR<br>MOLLA COMPOSTA | DRUCKFEDER<br>RESORTE DE COMP. |
| 22* | **W247234B** | | 4 | COLLAR | COLLERETTE<br>COLLARE | KRAGEN<br>COLLARIN |
| 23* | 70911712 | 22 5/16"-18 X 5/16 | 1 | SETSCREW | VIS DE BLOCAGE<br>INSIEME VITI | STELLSCHRAUBE<br>SET SCREW |
| 24* | 70920415 | 3/8"-16 X 1-1/4 | 4 | BOLT UNC | BOULON UNC<br>BULLONE UNC | MASCH.SCHRB.UNC<br>PERNO UNC |
| 25* | 70916965 | 3/8" | 4 | LOCK WASHER | RONDELLE FREIN<br>RONDELLA ARRESTO | SICHERUNGSRING<br>ARANDELA SEGURID |
| 26* | 70917378 | 3/8" | 4 | FLAT WASHER | RONDELLE PLATE<br>RONDELLE PIANA | UNTERLEGSCHEIBEN<br>ARANDELA PLANA |

**Transmission Shaft**
**Arbre De Transmission**
**Ubertragungswelle**
**Albero Di Trasmissione**
**Eje De Transmisión**

**20-35**

**8 Rows Narrow - Vertical Fold Frame**
**8 Rangs Etroits - Châssis Rabattable**
**8 Schmal Reihes - Falte Rahmen**
**8 Lineas Stretta - Telaio Ribaltabile**
**8 Lineas Estrecho - Bastidor Abatible**

5-PL29-006-A

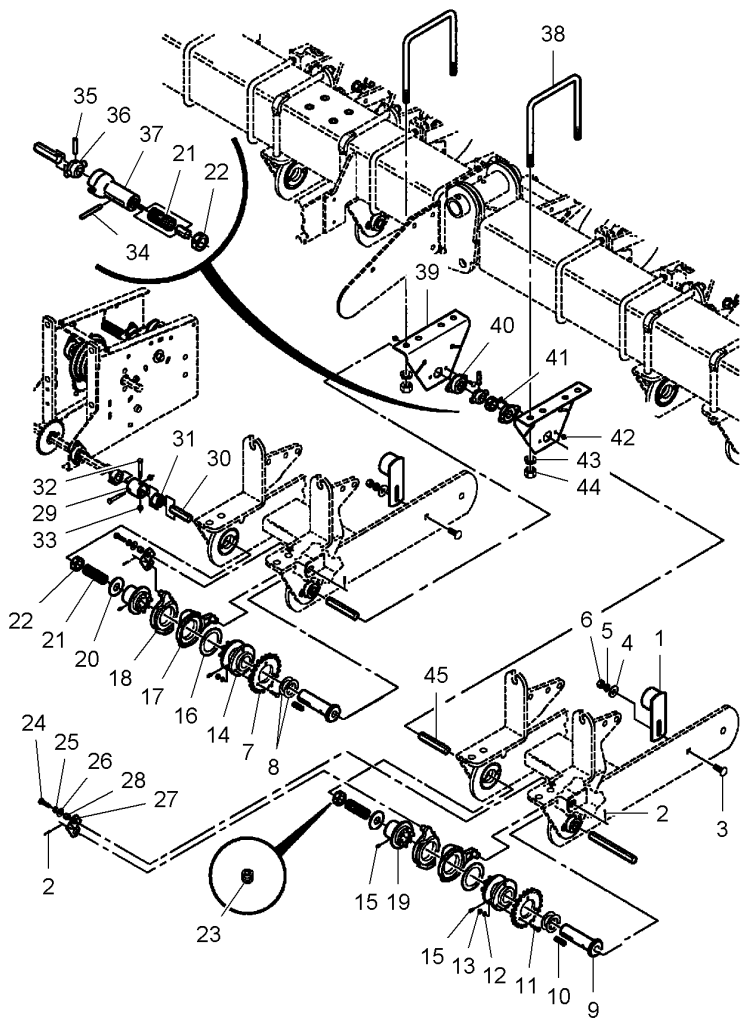


| | | | | | |
|---|---|---|---|---|---|
| 27* | W248000B | | **4** STRAP | PATTE<br>CORREGGIA | LASCHE<br>FAJA |
| 28* | W247683B | | **4** SPACER | ENTRETOISE<br>DISTANZIALE | ABSTANDSTUECK<br>DISCO ESPACIADOR |
| 29* | **W247687B** | | **2** COUPLING | CRABOT<br>ACCOPPIAMENTO | KUPPLUNG<br>ACOPLAMIENTO |
| 30* | W248020B | ◀▶ 46" | **2** SHAFT | ARBRE<br>ALBERO | WELLE<br>ARBOL |
| 31* | **W247688B** | | **4** ADAPTOR | ADAPTATEUR<br>ADATTATORE | REDUZIERNIPPEL<br>ADAPTADOR |
| 32* | 70921160 | 5/16"-18 X 2-1/4 | **4** BOLT UNC | BOULON UNC<br>BULLONE UNC | MASCH.SCHRB.UNC<br>PERNO UNC |
| 33* | Y704163 | 5/16"-18 | **4** LOCKNUT | ECROU FREIN<br>AUTOBLOCCANTE | SICHERUNGSMUTTER<br>CONTRATUERCA |
| 34* | 70918792 | 5/16" X 2-1/2 | **2** PIN | GOUPILLE<br>COPPIGLIA | STIFT<br>PASADOR |
| 35* | 70915523 | 5/16" X 1-1/2 | **2** PIN | GOUPILLE<br>COPPIGLIA | STIFT<br>PASADOR |
| 36* | W247904B | | **2** COUPLING | CRABOT<br>ACCOPPIAMENTO | KUPPLUNG<br>ACOPLAMIENTO |
| 37* | **W247905B** | | **2** COUPLING | CRABOT<br>ACCOPPIAMENTO | KUPPLUNG<br>ACOPLAMIENTO |
| 38* | **W232588B** | 5/8"-11 X 7-1/16 | **4** U BOLT | ETRIER FILETE<br>BULLONE A STAFFA | BUEGELSCHRAUBE<br>BRIDA EN U |
| 39* | 700155475 | | **4** BRACKET | SUPPORT FIXATION<br>STAFFETTA | HALTEARM<br>SOPORTE |
| 40* | **W247647B** | | **4** BEARING ASSY | ROULEMENT<br>CUSCINETTO COMPL | RADIALLAGER<br>RODAMIENTO RAD |
| 41* | 70931317 | 1/4"-20 X 3/4 | **8** BOLT | BOULON<br>BULLONE | BOLZEN<br>BULON |
| 42* | 1703354 | 1/4"-20 | **8** NUT UNC | ECROU UNC<br>DADO UNC | MUTTER UNC<br>TUERCA UNC |
| 43* | 70917373 | 5/8" | **8** LOCK WASHER | RONDELLE FREIN<br>RONDELLA ARRESTO | SICHERUNGSRING<br>ARANDELA SEGURID |
| 44* | 70932665 | 5/8"-11 | **8** NUT UNC | ECROU UNC<br>DADO UNC | MUTTER UNC<br>TUERCA UNC |
| 45* | W247693B | ◀▶ 44" | **2** SHAFT | ARBRE<br>ALBERO | WELLE<br>ARBOL |

**Transmission Shaft**
**Arbre De Transmission**
**Ubertragungswelle**
**Albero Di Trasmissione**
**Eje De Transmisión**

**20-40**

**8 Rows Wide**
**8 Rangs Larges**
**8 Breite Reihe**
**8 Lineas Larga**
**8 Lineas Ancha**

5-PL29-004-B

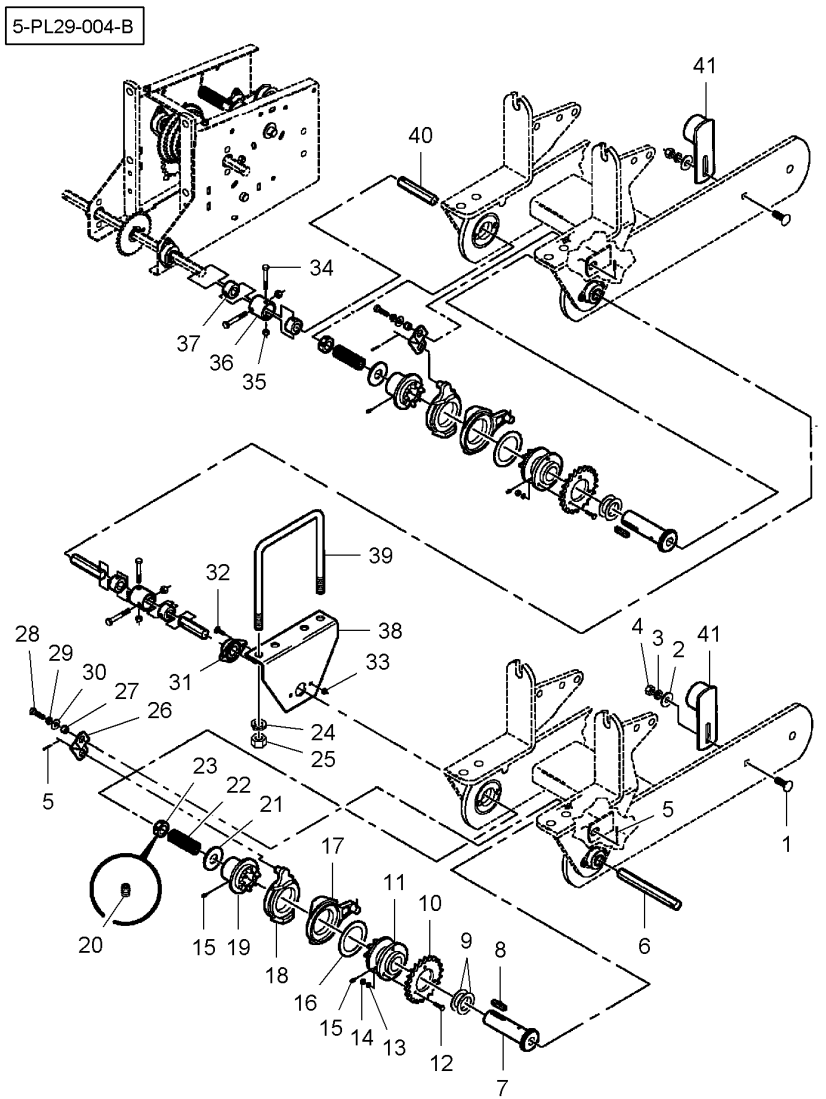


| | | | | | | |
|---|---|---|---|---|---|---|
| 1* | 70926838 | 1/2"-13 X 1-1/2 | 4 | BOLT UNC | BOULON UNC<br>BULLONE UNC | MASCH.SCHRB.UNC<br>PERNO UNC |
| 2* | 70918431 | 1/2" | 4 | FLAT WASHER | RONDELLE PLATE<br>RONDELLE PIANA | UNTERLEGSCHEIBEN<br>ARANDELA PLANA |
| 3* | Y705046 | 1/2" | 4 | LOCK WASHER | RONDELLE FREIN<br>RONDELLA ARRESTO | SICHERUNGSRING<br>ARANDELA SEGURID |
| 4* | 704031 | 1/2"-13 | 4 | NUT UNC | ECROU UNC<br>DADO UNC | MUTTER UNC<br>TUERCA UNC |
| 5* | 62117 | 1/8" X 1-1/4 | 8 | PIN | GOUPILLE<br>COPPIGLIA | STIFT<br>PASADOR |
| 6* | W248016B | ◀▶ 60"-1/2 | 2 | SHAFT | ARBRE<br>ALBERO | WELLE<br>ARBOL |
| 7* | **851238** | | 4 | SLEEVE | MANCHON<br>MANICOTTO | HUELSE<br>MANGUITO |
| 8* | **11335** | | 4 | KEY | CLAVETTE<br>CHIAVETTA | STELLKEIL<br>CHAVETA |
| 9* | **10487** | | 8 | WASHER | RONDELLE<br>RONDELLA | SCHEIBE<br>ARANDELA |
| 10* | N858629 | 22 | 4 | SPROCKET | BARBOTIN<br>RUOTA MOTRICE | KETTENRAD<br>RUEDA DE CADENA |
| 11* | **N858628** | | 4 | HUB | MOYEU<br>MOZZO | NABE<br>CUBO |
| 12* | 70927401 | 1/4"-20 X 1 | 12 | CAPSCREW | VIS BOUCHON<br>TAPPO A VITE | HUTSCHRAUBE<br>TORNILLO TAPON |
| 13* | 705012 | 1/4" | 12 | LOCK WASHER | RONDELLE FREIN<br>RONDELLA ARRESTO | SICHERUNGSRING<br>ARANDELA SEGURID |
| 14* | 70916622 | 1/4"-20 | 12 | NUT UNC | ECROU UNC<br>DADO UNC | MUTTER UNC<br>TUERCA UNC |
| 15* | 70914465 | 1/8"-27 | 8 | GREASE FITTING | GRAISSEUR<br>INGRASSATORE | DRUCKSCHMIERKOPF<br>ENGRASADOR |
| 16* | **WM6256** | | 4 | WASHER | RONDELLE<br>RONDELLA | SCHEIBE<br>ARANDELA |
| 17* | **WS1026** | | 4 | ARM | BRAS<br>BRACCIO | SCHARHEBEL<br>BRAZO |
| 18* | **WS988** | | 4 | CLUTCH | EMBRAYAGE<br>FRIZIONE | SCHALTKUPPLUNG<br>EMBRAGUE |
| 19* | **851009** | | 4 | HUB | MOYEU<br>MOZZO | NABE<br>CUBO |
| 20* | 70911712 | 23 5/16"-18 X 5/16 | 1 | SETSCREW | VIS DE BLOCAGE<br>INSIEME VITI | STELLSCHRAUBE<br>SET SCREW |
| 21* | 700709608 | | 4 | WASHER | RONDELLE<br>RONDELLA | SCHEIBE<br>ARANDELA |
| 22* | **W247680B** | | 4 | COMP.SPRING | RESSORT DE COMPR<br>MOLLA COMPOSTA | DRUCKFEDER<br>RESORTE DE COMP. |
| 23* | **W247234B** | | 4 | COLLAR | COLLERETTE<br>COLLARE | KRAGEN<br>COLLARIN |
| 24* | 70917373 | 5/8" | 4 | LOCK WASHER | RONDELLE FREIN<br>RONDELLA ARRESTO | SICHERUNGSRING<br>ARANDELA SEGURID |
| 25* | 70932665 | 5/8"-11 | 4 | NUT UNC | ECROU UNC<br>DADO UNC | MUTTER UNC<br>TUERCA UNC |
| 26* | W248000B | | 4 | STRAP | PATTE<br>CORREGGIA | LASCHE<br>FAJA |

| Transmission Shaft<br>Arbre De Transmission<br>Ubertragungswelle<br>Albero Di Trasmissione<br>Eje De Transmisión | 20-40 | 8 Rows Wide<br>8 Rangs Larges<br>8 Breite Reihe<br>8 Lineas Larga<br>8 Lineas Ancha |
|---|---|---|

5-PL29-004-B

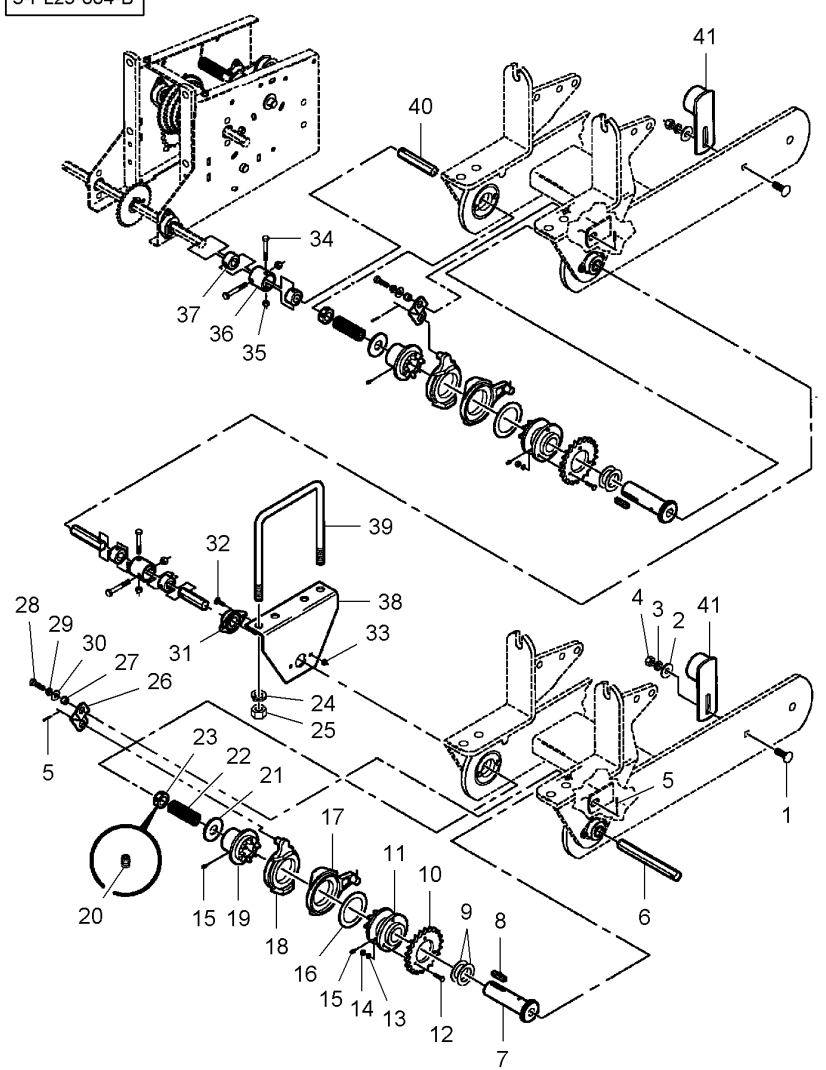


| | | | | | |
|---|---|---|---|---|---|
| 27* | W247683B | | 4 | SPACER | ENTRETOISE<br>DISTANZIALE |
| 28* | 70920415 | 3/8"-16 X 1-1/4 | 4 | BOLT UNC | BOULON UNC<br>BULLONE UNC |
| 29* | 70916965 | 3/8" | 4 | LOCK WASHER | RONDELLE FREIN<br>RONDELLA ARRESTO |
| 30* | 70917378 | 3/8" | 4 | FLAT WASHER | RONDELLE PLATE<br>RONDELLE PIANA |
| 31* | **W247647B** | | 2 | BEARING ASSY | ROULEMENT<br>CUSCINETTO COMPL |
| 32* | 70931317 | 1/4"-20 X 3/4 | 4 | BOLT | BOULON<br>BULLONE |
| 33* | 7774839 | 1/4"-20 | 4 | LOCKNUT | ECROU FREIN<br>AUTOBLOCCANTE |
| 34* | 70921160 | 5/16"-18 X 2-1/4 | 8 | BOLT UNC | BOULON UNC<br>BULLONE UNC |
| 35* | Y704163 | 5/16"-18 | 8 | LOCKNUT | ECROU FREIN<br>AUTOBLOCCANTE |
| 36* | **W247687B** | | 4 | COUPLING | CRABOT<br>ACCOPPIAMENTO |
| 37* | **W247688B** | | 8 | ADAPTOR | ADAPTATEUR<br>ADATTATORE |
| 38* | W247906B | | 2 | BRACKET | SUPPORT FIXATION<br>STAFFETTA |
| 39* | **W232588B** | 5/8"-11 X 7-1/16 | 2 | U BOLT | ETRIER FILETE<br>BULLONE A STAFFA |
| 40* | W247692B | ◀▶ 65" | 2 | SHAFT | ARBRE<br>ALBERO |
| 41* | N857262 | | 4 | TENSIONER | TENDEUR<br>TENDITORE |

| | | | | | |
|---|---|---|---|---|---|
| | | | | | ABSTANDSTUECK<br>DISCO ESPACIADOR |
| | | | | | MASCH.SCHRB.UNC<br>PERNO UNC |
| | | | | | SICHERUNGSRING<br>ARANDELA SEGURID |
| | | | | | UNTERLEGSCHEIBEN<br>ARANDELA PLANA |
| | | | | | RADIALLAGER<br>RODAMIENTO RAD |
| | | | | | BOLZEN<br>BULON |
| | | | | | SICHERUNGSMUTTER<br>CONTRATUERCA |
| | | | | | MASCH.SCHRB.UNC<br>PERNO UNC |
| | | | | | SICHERUNGSMUTTER<br>CONTRATUERCA |
| | | | | | KUPPLUNG<br>ACOPLAMIENTO |
| | | | | | REDUZIERNIPPEL<br>ADAPTADOR |
| | | | | | HALTEARM<br>SOPORTE |
| | | | | | BUEGELSCHRAUBE<br>BRIDA EN U |
| | | | | | WELLE<br>ARBOL |
| | | | | | SPANNER<br>TENSOR |

**Transmission Shaft**
**Arbre De Transmission**
**Ubertragungswelle**
**Albero Di Trasmissione**
**Eje De Transmisión**

**20-45**

**12 Row Narrow**
**12 Rangs Etroits**
**12 Schmal Reihes**
**12 Lineas Stretta**
**12 Lineas Estrecho**

5-PL29-007-A

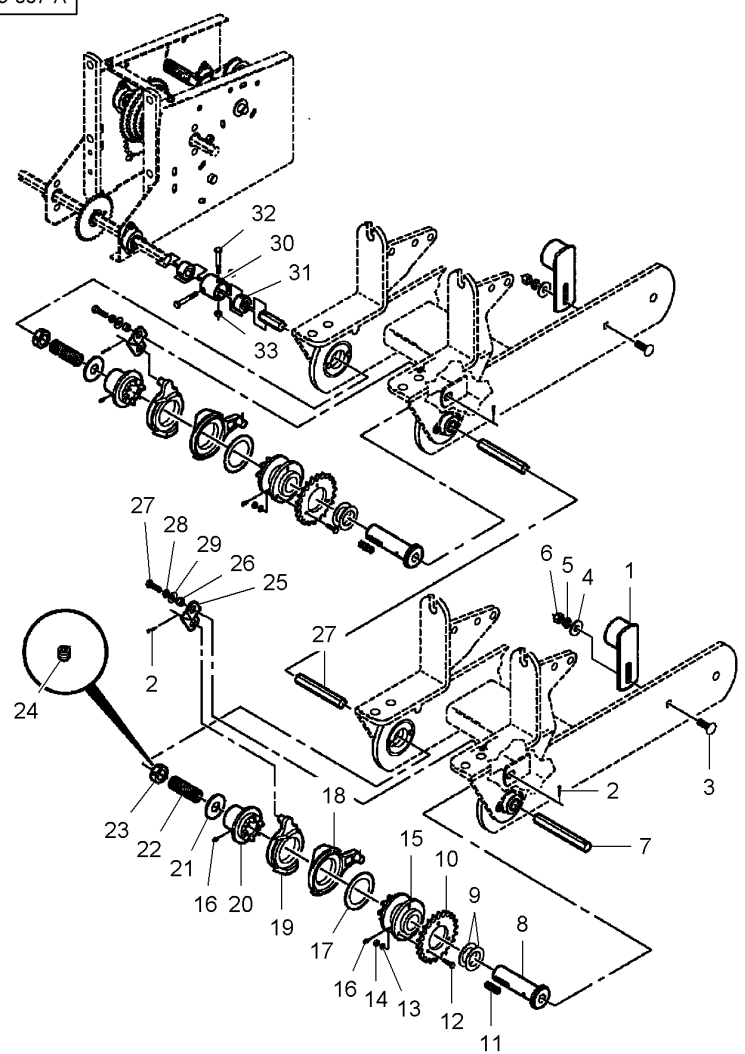


| | | | | | | |
|---|---|---|---|---|---|---|
| 1* | W247751B | | 4 | TIGHTENER | TENSEUR<br>TENDITORE* | SPANNROLLE<br>TENSADOR |
| 2* | 62117 | 1/8" X 1-1/4 | 8 | PIN | GOUPILLE<br>COPPIGLIA | STIFT<br>PASADOR |
| 3* | 70926838 | 1/2"-13 X 1-1/2 | 4 | BOLT UNC | BOULON UNC<br>BULLONE UNC | MASCH.SCHRB.UNC<br>PERNO UNC |
| 4* | 70918431 | 1/2" | 4 | FLAT WASHER | RONDELLE PLATE<br>RONDELLE PIANA | UNTERLEGSCHEIBEN<br>ARANDELA PLANA |
| 5* | Y705046 | 1/2" | 4 | LOCK WASHER | RONDELLE FREIN<br>RONDELLA ARRESTO | SICHERUNGSRING<br>ARANDELA SEGURID |
| 6* | 704031 | 1/2"-13 | 4 | NUT UNC | ECROU UNC<br>DADO UNC | MUTTER UNC<br>TUERCA UNC |
| 7* | W248016B | ◀▶ 60"-1/2 | 2 | SHAFT | ARBRE<br>ALBERO | WELLE<br>ARBOL |
| 8* | **851238** | | 4 | SLEEVE | MANCHON<br>MANICOTTO | HUELSE<br>MANGUITO |
| 9* | **10487** | | 8 | WASHER | RONDELLE<br>RONDELLA | SCHEIBE<br>ARANDELA |
| 10* | N858629 | 22 | 4 | SPROCKET | BARBOTIN<br>RUOTA MOTRICE | KETTENRAD<br>RUEDA DE CADENA |
| 11* | **11335** | | 4 | KEY | CLAVETTE<br>CHIAVETTA | STELLKEIL<br>CHAVETA |
| 12* | 70927401 | 1/4"-20 X 1 | 12 | CAPSCREW | VIS BOUCHON<br>TAPPO A VITE | HUTSCHRAUBE<br>TORNILLO TAPON |
| 13* | 705012 | 1/4" | 12 | LOCK WASHER | RONDELLE FREIN<br>RONDELLA ARRESTO | SICHERUNGSRING<br>ARANDELA SEGURID |
| 14* | 70916622 | 1/4"-20 | 12 | NUT UNC | ECROU UNC<br>DADO UNC | MUTTER UNC<br>TUERCA UNC |
| 15* | **N858628** | | 4 | HUB | MOYEU<br>MOZZO | NABE<br>CUBO |
| 16* | 70914465 | 1/8"-27 | 8 | GREASE FITTING | GRAISSEUR<br>INGRASSATORE | DRUCKSCHMIERKOPF<br>ENGRASADOR |
| 17* | **WM6256** | | 4 | WASHER | RONDELLE<br>RONDELLA | SCHEIBE<br>ARANDELA |
| 18* | **WS1026** | | 4 | ARM | BRAS<br>BRACCIO | SCHARHEBEL<br>BRAZO |
| 19* | **WS988** | | 4 | CLUTCH | EMBRAYAGE<br>FRIZIONE | SCHALTKUPPLUNG<br>EMBRAGUE |
| 20* | **851009** | | 4 | HUB | MOYEU<br>MOZZO | NABE<br>CUBO |
| 21* | 700709608 | | 4 | WASHER | RONDELLE<br>RONDELLA | SCHEIBE<br>ARANDELA |
| 22* | **W247680B** | | 4 | COMP.SPRING | RESSORT DE COMPR<br>MOLLA COMPOSTA | DRUCKFEDER<br>RESORTE DE COMP. |
| 23* | **W247234B** | | 4 | COLLAR | COLLERETTE<br>COLLARE | KRAGEN<br>COLLARIN |
| 24* | 70911712 | 23 5/16"-18 X 5/16 | 1 | SETSCREW | VIS DE BLOCAGE<br>INSIEME VITI | STELLSCHRAUBE<br>SET SCREW |
| 25* | W248000B | | 4 | STRAP | PATTE<br>CORREGGIA | LASCHE<br>FAJA |
| 26* | W247683B | | 4 | SPACER | ENTRETOISE<br>DISTANZIALE | ABSTANDSTUECK<br>DISCO ESPACIADOR |

| Transmission Shaft<br>Arbre De Transmission<br>Ubertragungswelle<br>Albero Di Trasmissione<br>Eje De Transmisión | 20-45 | 12 Row Narrow<br>12 Rangs Etroits<br>12 Schmal Reihes<br>12 Lineas Stretta<br>12 Lineas Estrecho |
|---|---|---|

5-PL29-007-A

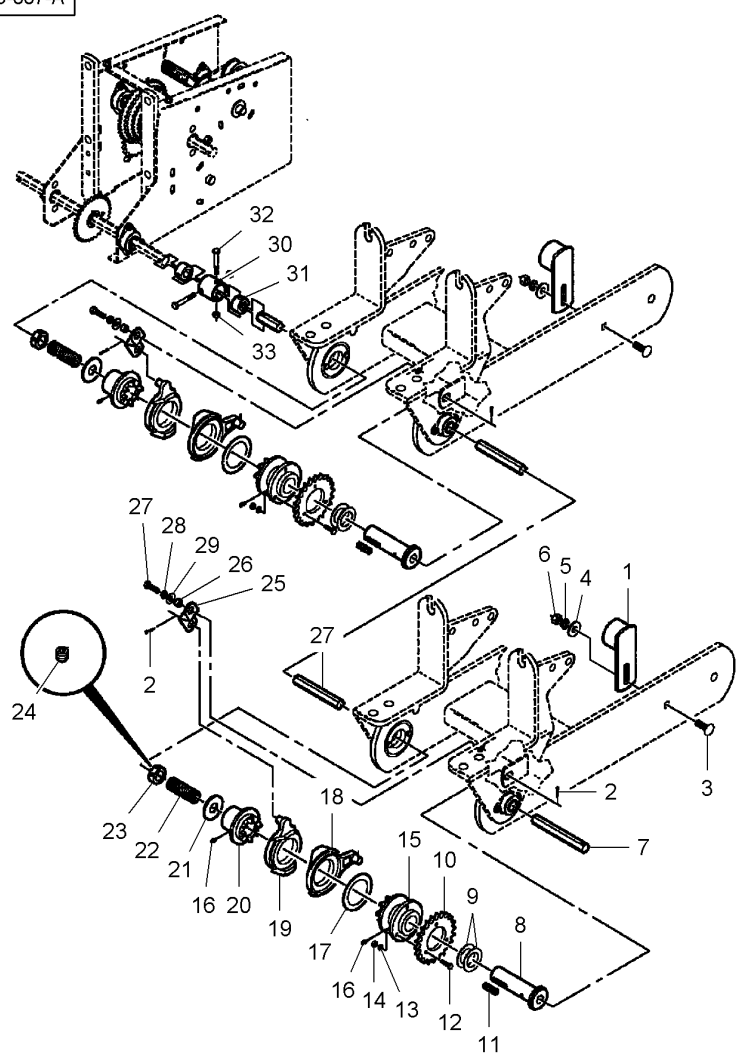


| | | | | | |
|---|---|---|---|---|---|
| 27* | 70920415 | 3/8"-16 X 1-1/4 | **4** | BOLT UNC | BOULON UNC<br>BULLONE UNC<br>MASCH.SCHRB.UNC<br>PERNO UNC |
| 28* | 70916965 | 3/8" | **4** | LOCK WASHER | RONDELLE FREIN<br>RONDELLA ARRESTO<br>SICHERUNGSRING<br>ARANDELA SEGURID |
| 29* | 70917378 | 3/8" | **4** | FLAT WASHER | RONDELLE PLATE<br>RONDELLE PIANA<br>UNTERLEGSCHEIBEN<br>ARANDELA PLANA |
| 30* | **W247687B** | | **2** | COUPLING | CRABOT<br>ACCOPPIAMENTO<br>KUPPLUNG<br>ACOPLAMIENTO |
| 31* | **W247688B** | | **4** | ADAPTOR | ADAPTATEUR<br>ADATTATORE<br>REDUZIERNIPPEL<br>ADAPTADOR |
| 32* | 70921160 | 5/16"-18 X 2-1/4 | **4** | BOLT UNC | BOULON UNC<br>BULLONE UNC<br>MASCH.SCHRB.UNC<br>PERNO UNC |
| 33* | Y704163 | 5/16"-18 | **4** | LOCKNUT | ECROU FREIN<br>AUTOBLOCCANTE<br>SICHERUNGSMUTTER<br>CONTRATUERCA |

| | | | |
|---|---|---|---|
| **Row Unit** | **Transmission** | **20-50** | **3 Row** |
| **Rang Unitaire** | **Transmission** | | **3 Rangs** |
| **Einheitlich Reihe** | **Kraftübertragung** | | **3 Reihes** |
| **Linea Unitario** | **Trasmissione** | | **3 Lineas** |
| **Linea Unitaria** | **Transmisión** | | **3 Lineas** |

5-PL22-001-B

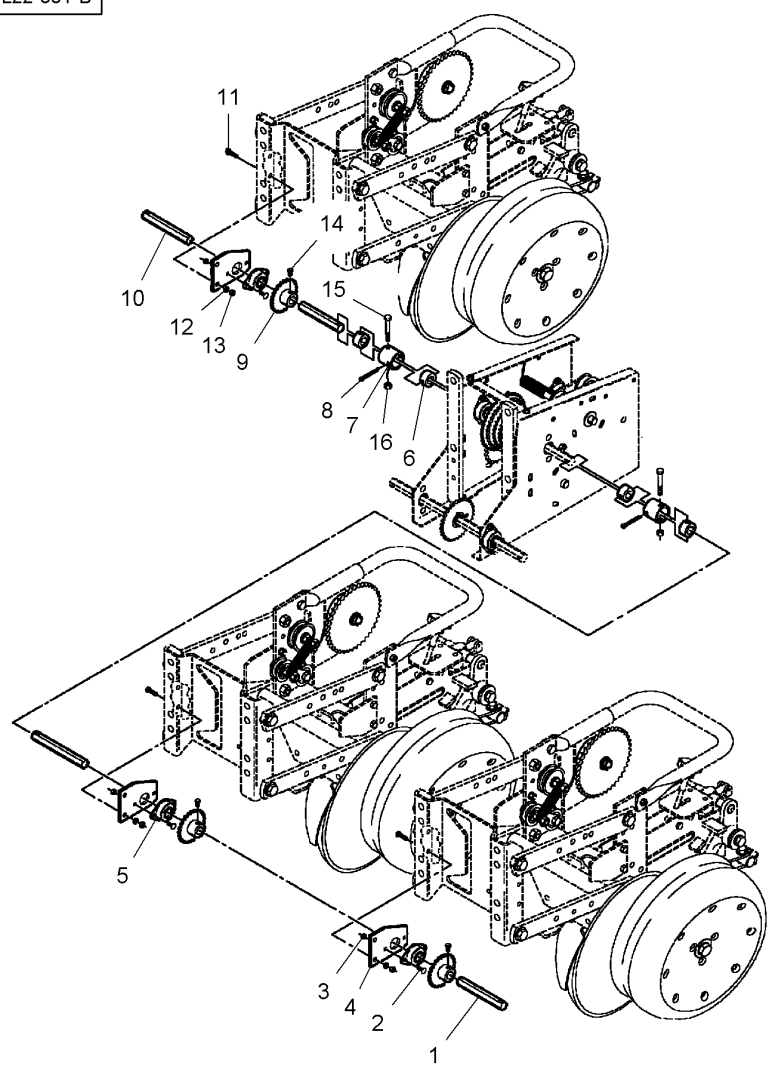


| | | | | | |
|---|---|---|---|---|---|
| 1* | W248146B | [A] ◀▶ 72"-1/2 | **1** SHAFT | ARBRE<br>ALBERO | WELLE<br>ARBOL |
| 1 | W248144B | [B] ◀▶ 105" | **1** SHAFT | ARBRE<br>ALBERO | WELLE<br>ARBOL |
| 2* | 364942X1 | 1/4"-20 X 5/8 | **6** BOLT UNC | BOULON UNC<br>BULLONE UNC | MASCH.SCHRB.UNC<br>PERNO UNC |
| 3* | 70923358 | 1/4"-20 | **6** LOCKNUT | ECROU FREIN<br>AUTOBLOCCANTE | SICHERUNGSMUTTER<br>CONTRATUERCA |
| 4* | **852192** | | **3** SUPPORT | SUPPORT<br>SOPPORTO | TRAGER<br>SOPORTE |
| 5* | **W247647B** | | **3** BEARING ASSY | ROULEMENT<br>CUSCINETTO COMPL | RADIALLAGER<br>RODAMIENTO RAD |
| 6* | **W247688B** | | **4** ADAPTOR | ADAPTATEUR<br>ADATTATORE | REDUZIERNIPPEL<br>ADAPTADOR |
| 7* | **W247687B** | | **2** COUPLING | CRABOT<br>ACCOPPIAMENTO | KUPPLUNG<br>ACOPLAMIENTO |
| 8 | 62406 | 3/16" X 2-1/2 | **2** PIN | GOUPILLE<br>COPPIGLIA | STIFT<br>PASADOR |
| 9 | **W247690B** | 20 | **3** SPROCKET | BARBOTIN<br>RUOTA MOTRICE | KETTENRAD<br>RUEDA DE CADENA |
| 10 | W248020B | [A] ◀▶ 46" | **1** SHAFT | ARBRE<br>ALBERO | WELLE<br>ARBOL |
| 10* | N855745 | [B] ◀▶ 78"-1/2 | **1** SHAFT | ARBRE<br>ALBERO | WELLE<br>ARBOL |
| 11 | 70920415 | 3/8"-16 X 1-1/4 | **6** BOLT UNC | BOULON UNC<br>BULLONE UNC | MASCH.SCHRB.UNC<br>PERNO UNC |
| 12* | 70916965 | 3/8" | **6** LOCK WASHER | RONDELLE FREIN<br>RONDELLA ARRESTO | SICHERUNGSRING<br>ARANDELA SEGURID |
| 13* | **70916950** | 3/8"-16 | **6** NUT UNC | ECROU UNC<br>DADO UNC | MUTTER UNC<br>TUERCA UNC |
| 14 | 70923085 | 5/16"-18 X 1/2 | **3** SETSCREW | VIS DE BLOCAGE<br>INSIEME VITI | STELLSCHRAUBE<br>SET SCREW |
| 15* | 70921160 | 5/16"-18 X 2-1/4 | **2** BOLT UNC | BOULON UNC<br>BULLONE UNC | MASCH.SCHRB.UNC<br>PERNO UNC |
| 16 | Y704163 | 5/16"-18 | **2** LOCKNUT | ECROU FREIN<br>AUTOBLOCCANTE | SICHERUNGSMUTTER<br>CONTRATUERCA |

[A] 3 ROWS WITH 1,5 M SPACING
3 RANGS AVEC ESPACEMENT 1,5 M
3 REIHE MIT ABSTAND 1,5 M
3 LINEAS CON DISTANZIAMENTO 1,5 M
3 LINEAS CON ESPACIAMIENTO 1,5 M

[B] 3 ROWS WITH 2,3 M SPACING
3 RANGS AVEC ESPACEMENT 2,3 M
3 REIHE MIT ABSTAND 2,3 M
3 LINEAS CON DISTANZIAMENTO 2,3 M
3 LINEAS CON ESPACIAMIENTO 2,3 M

| | | | |
|---|---|---|---|
| **Row Unit**<br>**Rang Unitaire**<br>**Einheitlich Reihe**<br>**Linea Unitario**<br>**Linea Unitaria** | **Transmission**<br>**Transmission**<br>**Kraftübertragung**<br>**Trasmissione**<br>**Transmisión** | **20-55** | **4 Row**<br>**4 Rangs**<br>**4 Reihes**<br>**4 Lineas**<br>**4 Lineas** |

5-PL22-002-B

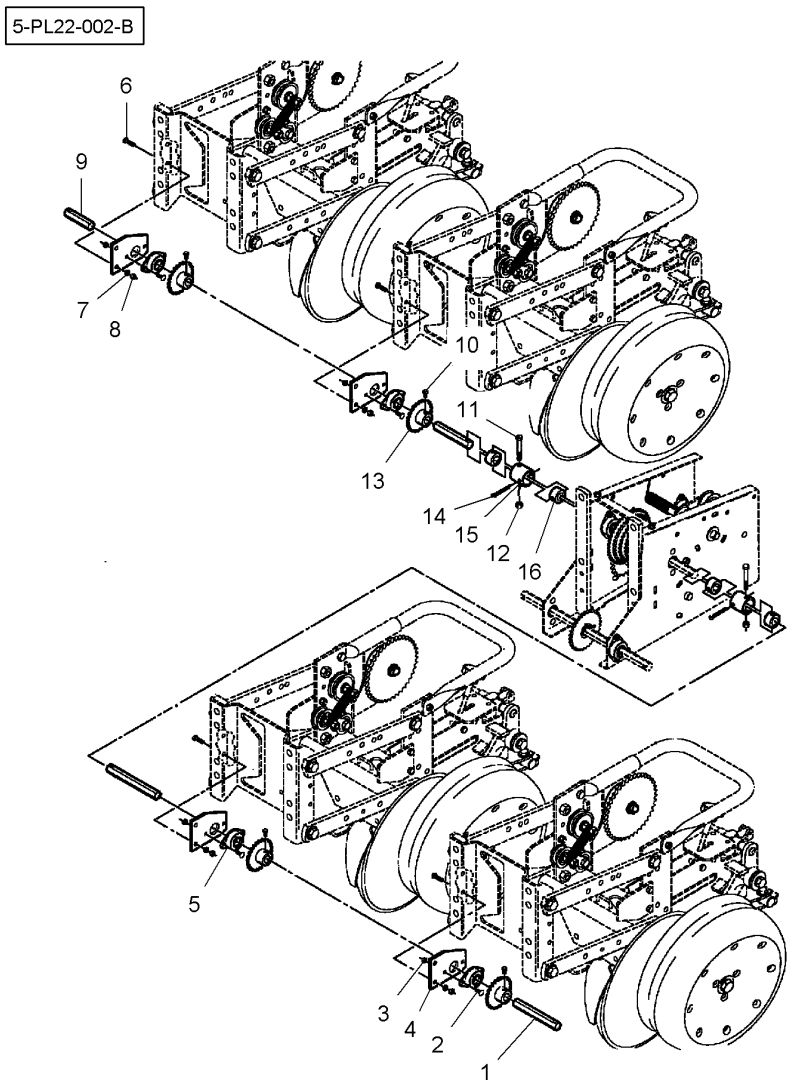


| | | | | | | |
|---|---|---|---|---|---|---|
| 1 | W247689B | ◀▶ 50" | **1** | SHAFT | ARBRE<br>ALBERO | WELLE<br>ARBOL |
| 2* | 364942X1 | 1/4"-20 X 5/8 | **8** | BOLT UNC | BOULON UNC<br>BULLONE UNC | MASCH.SCHRB.UNC<br>PERNO UNC |
| 3 | 70923358 | 1/4"-20 | **8** | LOCKNUT | ECROU FREIN<br>AUTOBLOCCANTE | SICHERUNGSMUTTER<br>CONTRATUERCA |
| 4 | **852192** | | **4** | SUPPORT | SUPPORT<br>SOPPORTO | TRAGER<br>SOPORTE |
| 5 | **W247647B** | | **4** | BEARING ASSY | ROULEMENT<br>CUSCINETTO COMPL | RADIALLAGER<br>RODAMIENTO RAD |
| 6 | 70920415 | 3/8"-16 X 1-1/4 | **6** | BOLT UNC | BOULON UNC<br>BULLONE UNC | MASCH.SCHRB.UNC<br>PERNO UNC |
| 7* | 70916965 | 3/8" | **6** | LOCK WASHER | RONDELLE FREIN<br>RONDELLA ARRESTO | SICHERUNGSRING<br>ARANDELA SEGURID |
| 8* | **70916950** | 3/8"-16 | **6** | NUT UNC | ECROU UNC<br>DADO UNC | MUTTER UNC<br>TUERCA UNC |
| 9 | W248016B | ◀▶ 60"-1/2 | **1** | SHAFT | ARBRE<br>ALBERO | WELLE<br>ARBOL |
| 10 | 70923085 | 5/16"-18 X 1/2 | **4** | SETSCREW | VIS DE BLOCAGE<br>INSIEME VITI | STELLSCHRAUBE<br>SET SCREW |
| 11* | 70921160 | 5/16"-18 X 2-1/4 | **2** | BOLT UNC | BOULON UNC<br>BULLONE UNC | MASCH.SCHRB.UNC<br>PERNO UNC |
| 12 | Y704163 | 5/16"-18 | **2** | LOCKNUT | ECROU FREIN<br>AUTOBLOCCANTE | SICHERUNGSMUTTER<br>CONTRATUERCA |
| 13 | **W247690B** | 20 | **4** | SPROCKET | BARBOTIN<br>RUOTA MOTRICE | KETTENRAD<br>RUEDA DE CADENA |
| 14 | 62406 | 3/16" X 2-1/2 | **2** | PIN | GOUPILLE<br>COPPIGLIA | STIFT<br>PASADOR |
| 15 | **W247687B** | | **2** | COUPLING | CRABOT<br>ACCOPPIAMENTO | KUPPLUNG<br>ACOPLAMIENTO |
| 16 | **W247688B** | | **4** | ADAPTOR | ADAPTATEUR<br>ADATTATORE | REDUZIERNIPPEL<br>ADAPTADOR |

| | | | |
|---|---|---|---|
| **Row Unit**<br>**Rang Unitaire**<br>**Einheitlich Reihe**<br>**Linea Unitario**<br>**Linea Unitaria** | **Transmission**<br>**Transmission**<br>**Kraftübertragung**<br>**Trasmissione**<br>**Transmisión** | **20-60** | **6 Row**<br>**6 Rangs**<br>**6 Reihes**<br>**6 Lineas**<br>**6 Lineas** |

5-PL22-003-B

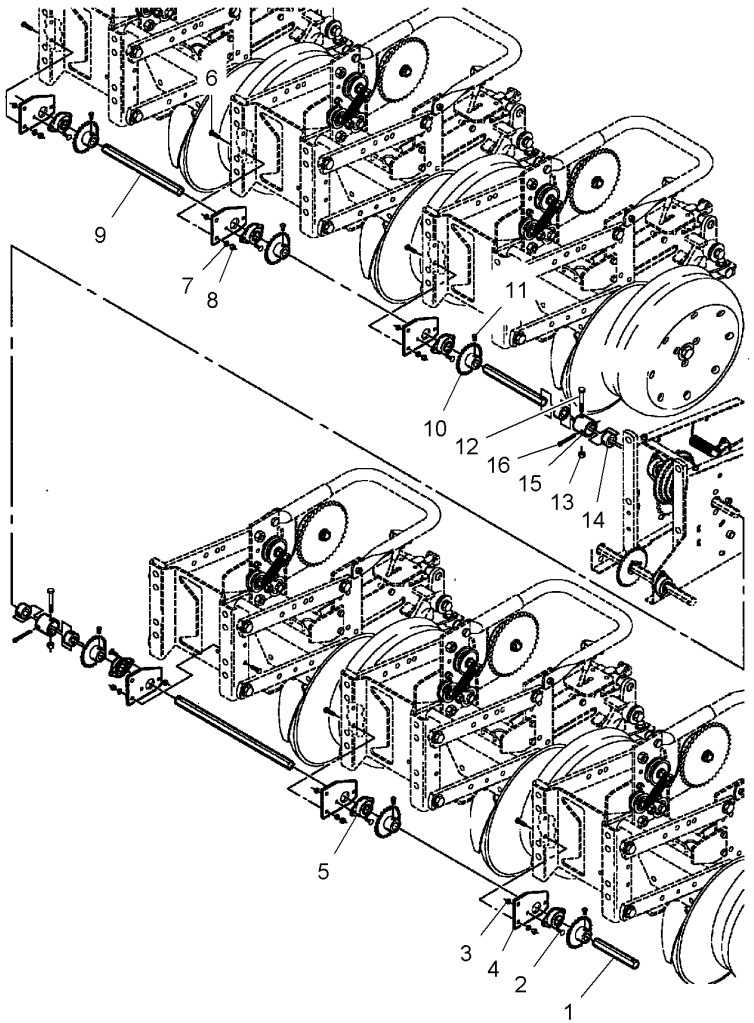


| | | | | | | |
|---|---|---|---|---|---|---|
| 1 | W248146B | [A]<br>◀▶ 72"-1/2 | **1** | SHAFT | ARBRE<br>ALBERO | WELLE<br>ARBOL |
| 1 | W247694B | [B]<br>◀▶ 96"-1/2 | **1** | SHAFT | ARBRE<br>ALBERO | WELLE<br>ARBOL |
| 2* | 364942X1 | 1/4"-20 X 5/8 | **12** | BOLT UNC | BOULON UNC<br>BULLONE UNC | MASCH.SCHRB.UNC<br>PERNO UNC |
| 3 | 70923358 | 1/4"-20 | **12** | LOCKNUT | ECROU FREIN<br>AUTOBLOCCANTE | SICHERUNGSMUTTER<br>CONTRATUERCA |
| 4 | **852192** | | **6** | SUPPORT | SUPPORT<br>SOPPORTO | TRAGER<br>SOPORTE |
| 5 | **W247647B** | | **6** | BEARING ASSY | ROULEMENT<br>CUSCINETTO COMPL | RADIALLAGER<br>RODAMIENTO RAD |
| 6 | 70920415 | 3/8"-16 X 1-1/4 | **12** | BOLT UNC | BOULON UNC<br>BULLONE UNC | MASCH.SCHRB.UNC<br>PERNO UNC |
| 7* | 70916965 | 3/8" | **12** | LOCK WASHER | RONDELLE FREIN<br>RONDELLA ARRESTO | SICHERUNGSRING<br>ARANDELA SEGURID |
| 8* | **70916950** | 3/8"-16 | **12** | NUT UNC | ECROU UNC<br>DADO UNC | MUTTER UNC<br>TUERCA UNC |
| 9* | N855745 | [A]<br>◀▶ 78"-1/2 | **1** | SHAFT | ARBRE<br>ALBERO | WELLE<br>ARBOL |
| 9 | W248144B | [B]<br>◀▶ 105" | **1** | SHAFT | ARBRE<br>ALBERO | WELLE<br>ARBOL |
| 10 | **W247690B** | 20 | **6** | SPROCKET | BARBOTIN<br>RUOTA MOTRICE | KETTENRAD<br>RUEDA DE CADENA |
| 11 | 70923085 | 5/16"-18 X 1/2 | **6** | SETSCREW | VIS DE BLOCAGE<br>INSIEME VITI | STELLSCHRAUBE<br>SET SCREW |
| 12* | 70921160 | 5/16"-18 X 2-1/4 | **2** | BOLT UNC | BOULON UNC<br>BULLONE UNC | MASCH.SCHRB.UNC<br>PERNO UNC |
| 13 | Y704163 | 5/16"-18 | **2** | LOCKNUT | ECROU FREIN<br>AUTOBLOCCANTE | SICHERUNGSMUTTER<br>CONTRATUERCA |
| 14 | **W247688B** | | **4** | ADAPTOR | ADAPTATEUR<br>ADATTATORE | REDUZIERNIPPEL<br>ADAPTADOR |
| 15 | **W247687B** | | **2** | COUPLING | CRABOT<br>ACCOPPIAMENTO | KUPPLUNG<br>ACOPLAMIENTO |
| 16 | 62406 | 3/16" X 2-1/2 | **2** | PIN | GOUPILLE<br>COPPIGLIA | STIFT<br>PASADOR |

[A] 6 ROW NARROW
6 RANGS ETROITS
6 SCHMAL REIHE
6 LINEAS STRETTA
6 LINEAS ESTRECHO

[B] 6 ROW WIDE
6 RANGS LARGES
6 BREITE REIHE
6 LINEAS LARGA
6 LINEAS ANCHA

| Row Unit | Transmission | 20-65 | 8 Row |
|---|---|---|---|
| Rang Unitaire | Transmission | | 8 Rangs |
| Einheitlich Reihe | Kraftübertragung | | 8 Reihes |
| Linea Unitario | Trasmissione | | 8 Lineas |
| Linea Unitaria | Transmisión | | 8 Lineas |

5-PL22-004-B

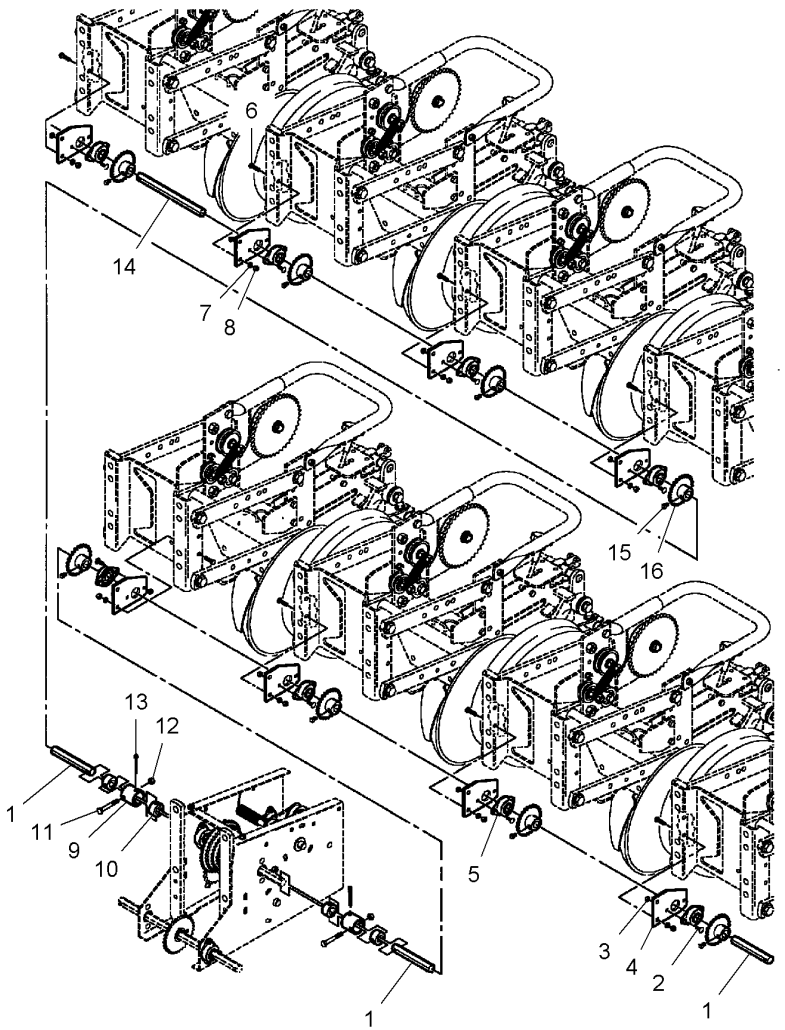


| | | | | | | |
|---|---|---|---|---|---|---|
| 1* | W247694B | [A] ◀▶ 96"-1/2 | 1 | SHAFT | ARBRE<br>ALBERO | WELLE<br>ARBOL |
| 1* | W247692B | [B] ◀▶ 65" | 3 | SHAFT | ARBRE<br>ALBERO | WELLE<br>ARBOL |
| 2* | 364942X1 | 1/4"-20 X 5/8 | 16 | BOLT UNC | BOULON UNC<br>BULLONE UNC | MASCH.SCHRB.UNC<br>PERNO UNC |
| 3 | 70923358 | 1/4"-20 | 16 | LOCKNUT | ECROU FREIN<br>AUTOBLOCCANTE | SICHERUNGSMUTTER<br>CONTRATUERCA |
| 4 | **852192** | | 8 | SUPPORT | SUPPORT<br>SOPPORTO | TRAGER<br>SOPORTE |
| 5 | **W247647B** | | 8 | BEARING ASSY | ROULEMENT<br>CUSCINETTO COMPL | RADIALLAGER<br>RODAMIENTO RAD |
| 6 | 70920415 | 3/8"-16 X 1-1/4 | 16 | BOLT UNC | BOULON UNC<br>BULLONE UNC | MASCH.SCHRB.UNC<br>PERNO UNC |
| 7* | 70916965 | 3/8" | 16 | LOCK WASHER | RONDELLE FREIN<br>RONDELLA ARRESTO | SICHERUNGSRING<br>ARANDELA SEGURID |
| 8* | **70916950** | 3/8"-16 | 16 | NUT UNC | ECROU UNC<br>DADO UNC | MUTTER UNC<br>TUERCA UNC |
| 9 | **W247687B** | | 2 | COUPLING | CRABOT<br>ACCOPPIAMENTO | KUPPLUNG<br>ACOPLAMIENTO |
| 10 | **W247688B** | | 4 | ADAPTOR | ADAPTATEUR<br>ADATTATORE | REDUZIERNIPPEL<br>ADAPTADOR |
| 11* | 70921160 | 5/16"-18 X 2-1/4 | 2 | BOLT UNC | BOULON UNC<br>BULLONE UNC | MASCH.SCHRB.UNC<br>PERNO UNC |
| 12 | Y704163 | 5/16"-18 | 2 | LOCKNUT | ECROU FREIN<br>AUTOBLOCCANTE | SICHERUNGSMUTTER<br>CONTRATUERCA |
| 13 | 62406 | 3/16" X 2-1/2 | 2 | PIN | GOUPILLE<br>COPPIGLIA | STIFT<br>PASADOR |
| 14* | W248144B | [A] ◀▶ 105" | 1 | SHAFT | ARBRE<br>ALBERO | WELLE<br>ARBOL |
| 14* | W247691B | [B] ◀▶ 75" | 1 | SHAFT | ARBRE<br>ALBERO | WELLE<br>ARBOL |
| 15 | 70923085 | 5/16"-18 X 1/2 | 8 | SETSCREW | VIS DE BLOCAGE<br>INSIEME VITI | STELLSCHRAUBE<br>SET SCREW |
| 16 | **W247690B** | 20 | 8 | SPROCKET | BARBOTIN<br>RUOTA MOTRICE | KETTENRAD<br>RUEDA DE CADENA |

[A] 8 ROW NARROW
8 RANGS ETROITS
8 SCHMAL REIHE
8 LINEAS STRETTA
8 LINEAS ESTRECHO

[B] 8 ROW WIDE
8 RANGS LARGES
8 BREITE REIHE
8 LINEA LARGA
8 LINEA ANCHA

| | | |
|---|---|---|
| **Row Unit** | **Transmission** | |
| **Rang Unitaire** | **Transmission** | |
| **Einheitlich Reihe** | **Kraftübertragung** | **20-70** |
| **Linea Unitario** | **Trasmissione** | |
| **Linea Unitaria** | **Transmisión** | |

**8 Rows Narrow - Vertical Fold Frame**
**8 Rangs Etroits - Châssis Rabattable**
**8 Schmal Reihes - Falte Rahmen**
**8 Lineas Stretta - Telaio Ribaltabile**
**8 Lineas Estrecho - Bastidor Abatible**

5-PL22-006-A

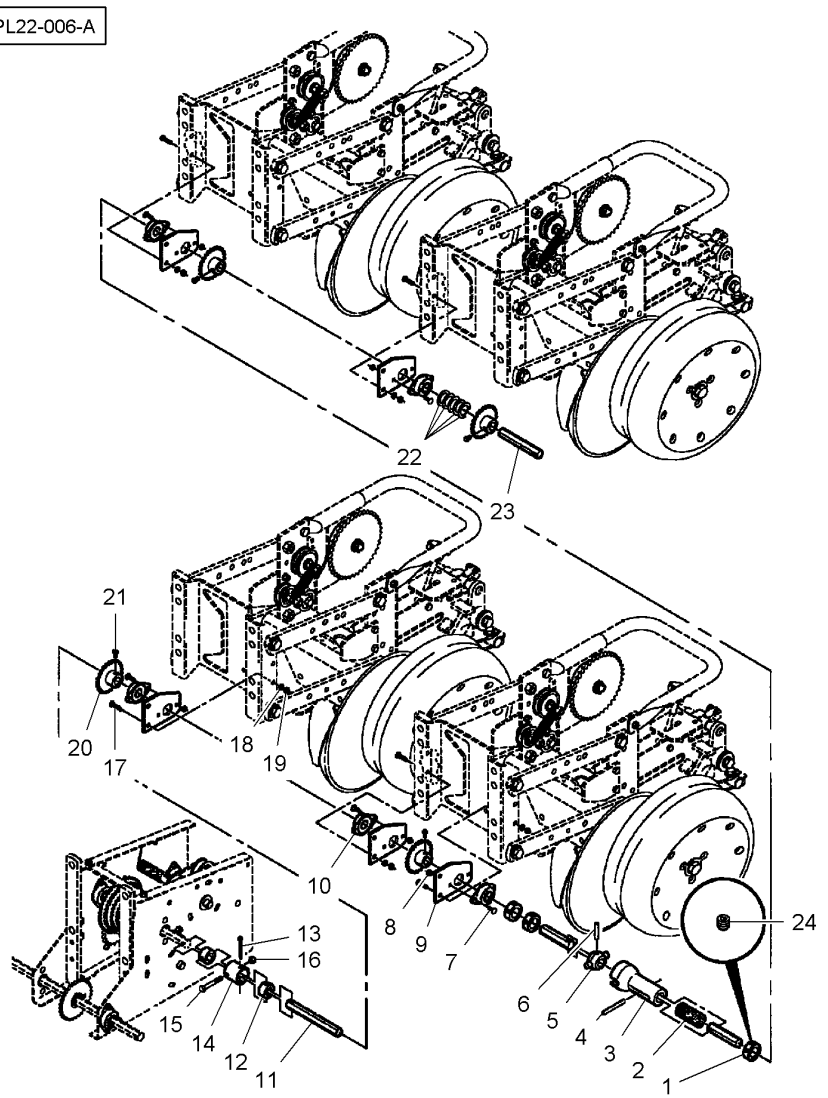


| | | | | | |
|---|---|---|---|---|---|
| 1* | **W247234B** | | **6** | COLLAR | COLLERETTE<br>COLLARE<br>KRAGEN<br>COLLARIN |
| 2* | **W247680B** | | **2** | COMP.SPRING | RESSORT DE COMPR<br>MOLLA COMPOSTA<br>DRUCKFEDER<br>RESORTE DE COMP. |
| 3* | **W247905B** | | **2** | COUPLING | CRABOT<br>ACCOPPIAMENTO<br>KUPPLUNG<br>ACOPLAMIENTO |
| 4* | 70918792 | 5/16" X 2-1/2 | **2** | PIN | GOUPILLE<br>COPPIGLIA<br>STIFT<br>PASADOR |
| 5* | W247904B | | **2** | COUPLING | CRABOT<br>ACCOPPIAMENTO<br>KUPPLUNG<br>ACOPLAMIENTO |
| 6* | 70915523 | 5/16" X 1-1/2 | **2** | PIN | GOUPILLE<br>COPPIGLIA<br>STIFT<br>PASADOR |
| 7* | 364942X1 | 1/4"-20 X 5/8 | **20** | BOLT UNC | BOULON UNC<br>BULLONE UNC<br>MASCH.SCHRB.UNC<br>PERNO UNC |
| 8* | 70923358 | 1/4"-20 | **20** | LOCKNUT | ECROU FREIN<br>AUTOBLOCCANTE<br>SICHERUNGSMUTTER<br>CONTRATUERCA |
| 9* | **852192** | | **10** | SUPPORT | SUPPORT<br>SOPPORTO<br>TRAGER<br>SOPORTE |
| 10* | **W247647B** | | **10** | BEARING ASSY | ROULEMENT<br>CUSCINETTO COMPL<br>RADIALLAGER<br>RODAMIENTO RAD |
| 11* | W247771B | ◀▶ 48"-1/2 | **2** | SHAFT | ARBRE<br>ALBERO<br>WELLE<br>ARBOL |
| 12* | **W247688B** | | **4** | ADAPTOR | ADAPTATEUR<br>ADATTATORE<br>REDUZIERNIPPEL<br>ADAPTADOR |
| 13* | 62406 | 3/16" X 2-1/2 | **2** | PIN | GOUPILLE<br>COPPIGLIA<br>STIFT<br>PASADOR |
| 14* | **W247687B** | | **2** | COUPLING | CRABOT<br>ACCOPPIAMENTO<br>KUPPLUNG<br>ACOPLAMIENTO |
| 15* | 70921160 | 5/16"-18 X 2-1/4 | **2** | BOLT UNC | BOULON UNC<br>BULLONE UNC<br>MASCH.SCHRB.UNC<br>PERNO UNC |
| 16* | Y704163 | 5/16"-18 | **2** | LOCKNUT | ECROU FREIN<br>AUTOBLOCCANTE<br>SICHERUNGSMUTTER<br>CONTRATUERCA |
| 17* | 70920415 | 3/8"-16 X 1-1/4 | **20** | BOLT UNC | BOULON UNC<br>BULLONE UNC<br>MASCH.SCHRB.UNC<br>PERNO UNC |
| 18* | 70916965 | 3/8" | **20** | LOCK WASHER | RONDELLE FREIN<br>RONDELLA ARRESTO<br>SICHERUNGSRING<br>ARANDELA SEGURID |
| 19* | **70916950** | 3/8"-16 | **20** | NUT UNC | ECROU UNC<br>DADO UNC<br>MUTTER UNC<br>TUERCA UNC |
| 20* | **W247690B** | 20 | **8** | SPROCKET | BARBOTIN<br>RUOTA MOTRICE<br>KETTENRAD<br>RUEDA DE CADENA |
| 21* | 70923085 | 5/16"-18 X 1/2 | **8** | SETSCREW | VIS DE BLOCAGE<br>INSIEME VITI<br>STELLSCHRAUBE<br>SET SCREW |
| 22* | 10568 | ◀ | **5** | WASHER | RONDELLE<br>RONDELLA<br>SCHEIBE<br>ARANDELA |
| 23* | W247689B | ◀<br>◀▶ 60" | **1** | SHAFT | ARBRE<br>ALBERO<br>WELLE<br>ARBOL |
| 23* | W248016B | ▶<br>◀▶ 60"-1/2 | **1** | SHAFT | ARBRE<br>ALBERO<br>WELLE<br>ARBOL |
| 24* | 70911712 | 1 5/16"-18 X 5/16 | **2** | SETSCREW | VIS DE BLOCAGE<br>INSIEME VITI<br>STELLSCHRAUBE<br>SET SCREW |

| Row Unit | Transmission | 20-75 | 12 Row Narrow |
|---|---|---|---|
| Rang Unitaire | Transmission | | 12 Rangs Etroits |
| Einheitlich Reihe | Kraftübertragung | | 12 Schmal Reihes |
| Linea Unitario | Trasmissione | | 12 Lineas Stretta |
| Linea Unitaria | Transmisión | | 12 Lineas Estrecho |

5-PL22-005-B

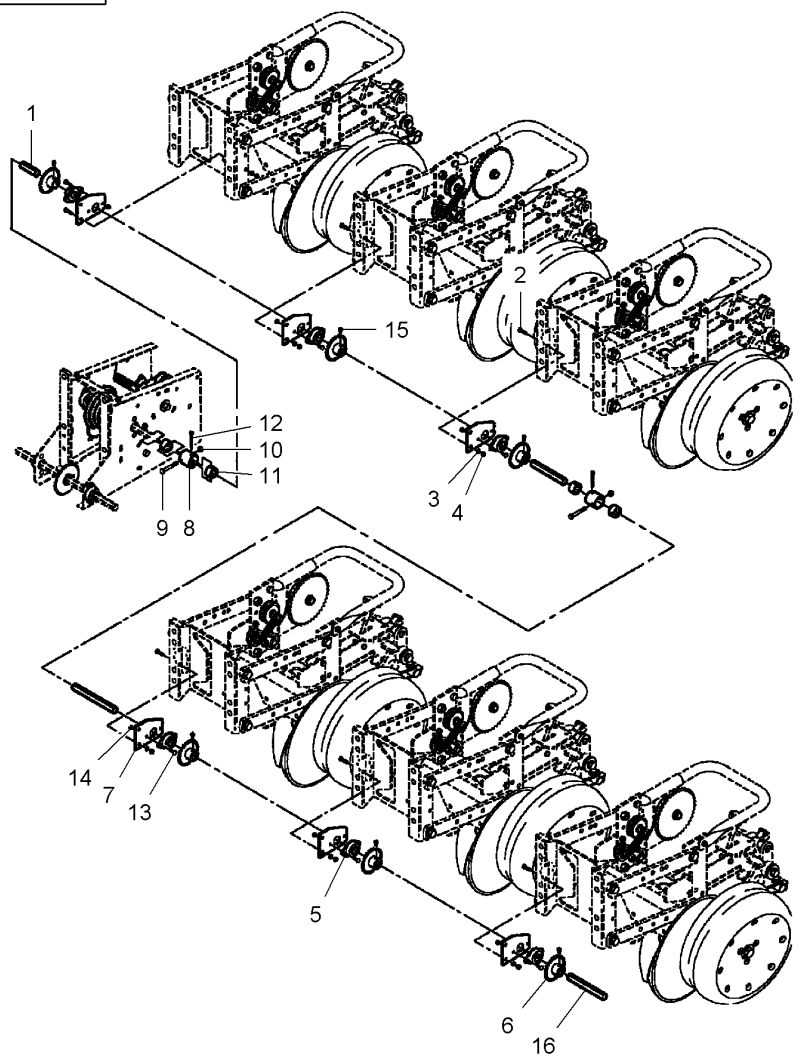


| | | | | | |
|---|---|---|---|---|---|
| 1* | N855745 | ◀▶ 78"-1/2 | 2 | SHAFT | ARBRE<br>ALBERO | WELLE<br>ARBOL |
| 2* | 70920415 | 3/8"-16 X 1-1/4 | 24 | BOLT UNC | BOULON UNC<br>BULLONE UNC | MASCH.SCHRB.UNC<br>PERNO UNC |
| 3* | 70916965 | 3/8" | 24 | LOCK WASHER | RONDELLE FREIN<br>RONDELLA ARRESTO | SICHERUNGSRING<br>ARANDELA SEGURID |
| 4* | **70916950** | 3/8"-16 | 24 | NUT UNC | ECROU UNC<br>DADO UNC | MUTTER UNC<br>TUERCA UNC |
| 5* | **W247647B** | | 12 | BEARING ASSY | ROULEMENT<br>CUSCINETTO COMPL | RADIALLAGER<br>RODAMIENTO RAD |
| 6* | **W247690B** | | 12 | SPROCKET | BARBOTIN<br>RUOTA MOTRICE | KETTENRAD<br>RUEDA DE CADENA |
| 7* | **852192** | | 12 | SUPPORT | SUPPORT<br>SOPPORTO | TRAGER<br>SOPORTE |
| 8* | **W247687B** | | 4 | COUPLING | CRABOT<br>ACCOPPIAMENTO | KUPPLUNG<br>ACOPLAMIENTO |
| 9* | 70921160 | 5/16"-18 X 2-1/4 | 4 | BOLT UNC | BOULON UNC<br>BULLONE UNC | MASCH.SCHRB.UNC<br>PERNO UNC |
| 10* | Y704163 | 5/16"-18 | 4 | LOCKNUT | ECROU FREIN<br>AUTOBLOCCANTE | SICHERUNGSMUTTER<br>CONTRATUERCA |
| 11* | **W247688B** | | 8 | ADAPTOR | ADAPTATEUR<br>ADATTATORE | REDUZIERNIPPEL<br>ADAPTADOR |
| 12* | 62406 | 3/16" X 2-1/2 | 4 | PIN | GOUPILLE<br>COPPIGLIA | STIFT<br>PASADOR |
| 13* | 364942X1 | 1/4"-20 X 5/8 | 36 | BOLT UNC | BOULON UNC<br>BULLONE UNC | MASCH.SCHRB.UNC<br>PERNO UNC |
| 14* | 70923358 | 1/4"-20 | 36 | LOCKNUT | ECROU FREIN<br>AUTOBLOCCANTE | SICHERUNGSMUTTER<br>CONTRATUERCA |
| 15* | 70923085 | 5/16"-18 X 1/2 | 12 | SETSCREW | VIS DE BLOCAGE<br>INSIEME VITI | STELLSCHRAUBE<br>SET SCREW |
| 16* | N855745 | ◀<br>◀▶ 78"-1/2 | 1 | SHAFT | ARBRE<br>ALBERO | WELLE<br>ARBOL |
| 16* | W248018B | ▶<br>◀▶ 88" | 1 | SHAFT | ARBRE<br>ALBERO | WELLE<br>ARBOL |

| | | |
|---|---|---|
| **Row Unit** | **Transmission** | **12 Row Narrow - Vertical Fold Frame** |
| **Rang Unitaire** | **Transmission** | **12 Rangs Etroits - Châssis Rabattable** |
| **Einheitlich Reihe** | **Kraftübertragung** | **12 Schmal Reihes - Falte Rahmen** |
| **Linea Unitario** | **Trasmissione** | **12 Lineas Stretta - Telaio Ribaltabile** |
| **Linea Unitaria** | **Transmisión** | **12 Lineas Estrecho - Bastidor Abatible** |

**20-80**

5-PL22-007-A

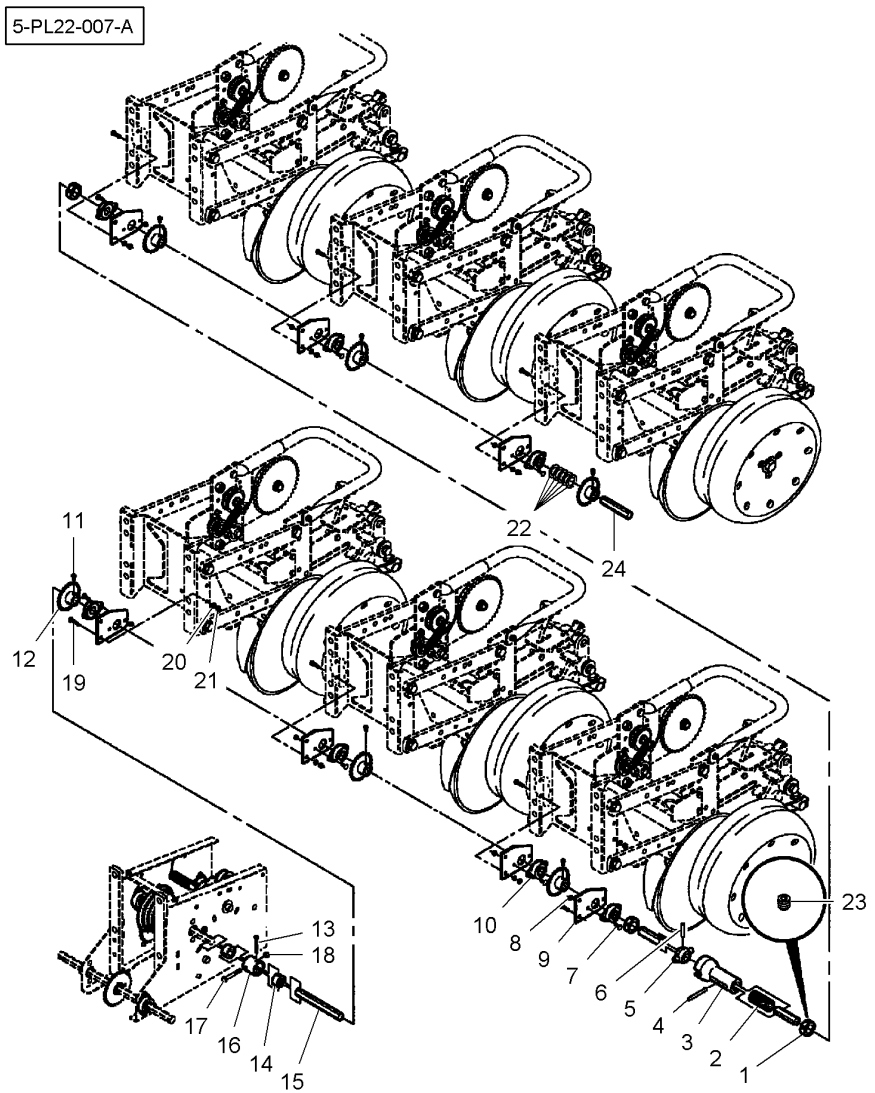


| | | | | | |
|---|---|---|---|---|---|
| 1* | **W247234B** | | **7** | COLLAR | COLLERETTE<br>COLLARE | KRAGEN<br>COLLARIN |
| 2* | **W247680B** | | **2** | COMP.SPRING | RESSORT DE COMPR<br>MOLLA COMPOSTA | DRUCKFEDER<br>RESORTE DE COMP. |
| 3* | **W247905B** | | **2** | COUPLING | CRABOT<br>ACCOPPIAMENTO | KUPPLUNG<br>ACOPLAMIENTO |
| 4* | 70918792 | 5/16" X 2-1/2 | **2** | PIN | GOUPILLE<br>COPPIGLIA | STIFT<br>PASADOR |
| 5* | W247904B | | **2** | COUPLING | CRABOT<br>ACCOPPIAMENTO | KUPPLUNG<br>ACOPLAMIENTO |
| 6* | 70915523 | 5/16" X 1-1/2 | **2** | PIN | GOUPILLE<br>COPPIGLIA | STIFT<br>PASADOR |
| 7* | 364942X1 | 1/4"-20 X 5/8 | **28** | BOLT UNC | BOULON UNC<br>BULLONE UNC | MASCH.SCHRB.UNC<br>PERNO UNC |
| 8* | 70923358 | 1/4"-20 | **28** | LOCKNUT | ECROU FREIN<br>AUTOBLOCCANTE | SICHERUNGSMUTTER<br>CONTRATUERCA |
| 9* | **852192** | | **14** | SUPPORT | SUPPORT<br>SOPPORTO | TRAGER<br>SOPORTE |
| 10* | **W247647B** | | **14** | BEARING ASSY | ROULEMENT<br>CUSCINETTO COMPL | RADIALLAGER<br>RODAMIENTO RAD |
| 11* | 70923085 | 5/16"-18 X 1/2 | **12** | SETSCREW | VIS DE BLOCAGE<br>INSIEME VITI | STELLSCHRAUBE<br>SET SCREW |
| 12* | **W247690B** | 20 | **12** | SPROCKET | BARBOTIN<br>RUOTA MOTRICE | KETTENRAD<br>RUEDA DE CADENA |
| 13* | 62406 | 3/16" X 2-1/2 | **2** | PIN | GOUPILLE<br>COPPIGLIA | STIFT<br>PASADOR |
| 14* | **W247688B** | | **4** | ADAPTOR | ADAPTATEUR<br>ADATTATORE | REDUZIERNIPPEL<br>ADAPTADOR |
| 15* | N855745 | 78"-1/2 | **2** | SHAFT | ARBRE<br>ALBERO | WELLE<br>ARBOL |
| 16* | **W247687B** | | **2** | COUPLING | CRABOT<br>ACCOPPIAMENTO | KUPPLUNG<br>ACOPLAMIENTO |
| 17* | 70921160 | 5/16"-18 X 2-1/4 | **2** | BOLT UNC | BOULON UNC<br>BULLONE UNC | MASCH.SCHRB.UNC<br>PERNO UNC |
| 18* | Y704163 | 5/16"-18 | **2** | LOCKNUT | ECROU FREIN<br>AUTOBLOCCANTE | SICHERUNGSMUTTER<br>CONTRATUERCA |
| 19* | 70920415 | 3/8"-16 X 1-1/4 | **28** | BOLT UNC | BOULON UNC<br>BULLONE UNC | MASCH.SCHRB.UNC<br>PERNO UNC |
| 20* | 70916965 | 3/8" | **28** | LOCK WASHER | RONDELLE FREIN<br>RONDELLA ARRESTO | SICHERUNGSRING<br>ARANDELA SEGURID |
| 21* | **70916950** | 3/8"-16 | **28** | NUT UNC | ECROU UNC<br>DADO UNC | MUTTER UNC<br>TUERCA UNC |
| 22* | 10568 | | **5** | WASHER | RONDELLE<br>RONDELLA | SCHEIBE<br>ARANDELA |
| 23* | 70911712 | 1 5/16"-18 X 5/16 | **2** | SETSCREW | VIS DE BLOCAGE<br>INSIEME VITI | STELLSCHRAUBE<br>SET SCREW |
| 24* | N855745 | 78"-1/2 | **1** | SHAFT | ARBRE<br>ALBERO | WELLE<br>ARBOL |
| 24* | W248018B | 88" | **1** | SHAFT | ARBRE<br>ALBERO | WELLE<br>ARBOL |

**Transmission**
**Transmission**
**Kraftübertragung**
**Trasmissione**
**Transmisión**

**20-85**

**Protection**
**Protection**
**Schutz**
**Protezione**
**Protección**

5-PL02-001-B

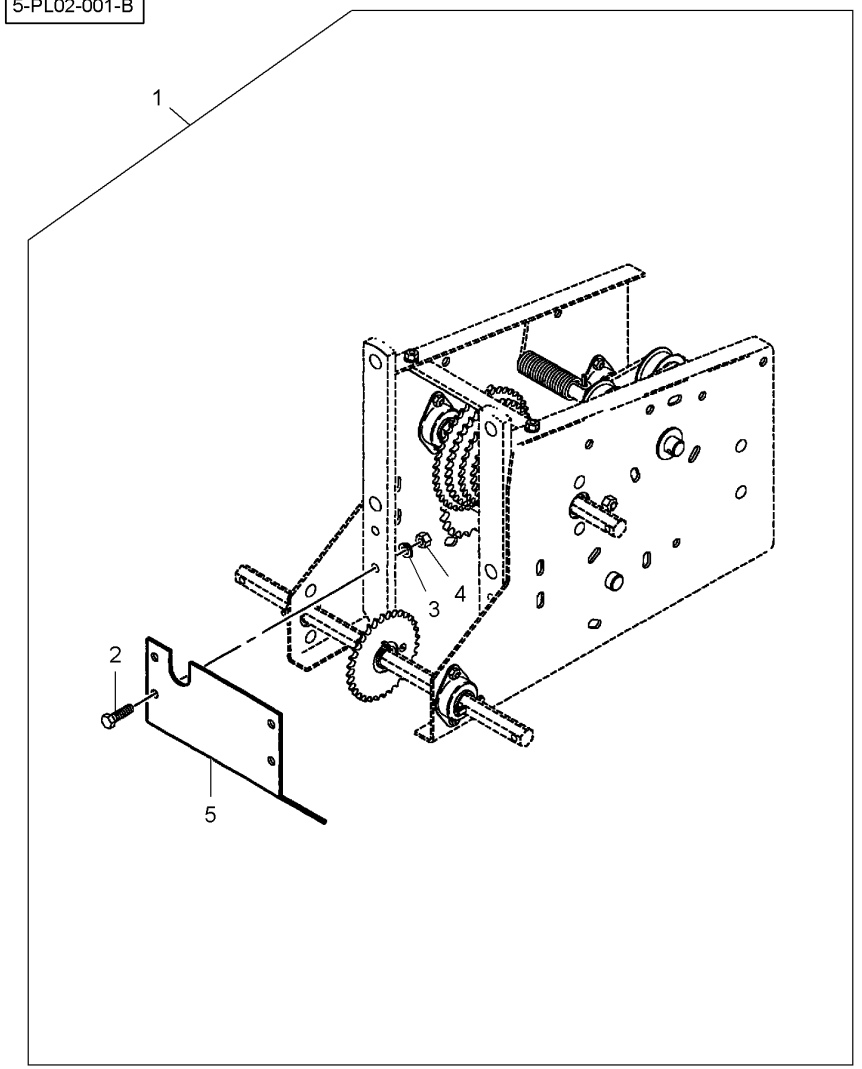


| | | | | | |
|---|---|---|---|---|---|
| 1 | 6100057 | | **1** KIT, ATTACHMENT | JEU ACCESSOIRES<br>KIT ACCESSORI | SATZ ANBAUTEILE<br>JUEGO ACCESORIO |
| 2 | 70920415 | 1 3/8"-16 X 1-1/4 | **4** BOLT UNC | BOULON UNC<br>BULLONE UNC | MASCH.SCHRB.UNC<br>PERNO UNC |
| 3 | 70916965 | 1 3/8" | **4** LOCK WASHER | RONDELLE FREIN<br>RONDELLA ARRESTO | SICHERUNGSRING<br>ARANDELA SEGURID |
| 4 | **70916950** | 1 3/8"-16 | **4** NUT UNC | ECROU UNC<br>DADO UNC | MUTTER UNC<br>TUERCA UNC |
| 5 | 852732 | 1 | **1** SHIELD | TOLE<br>RIPARO | SCHILD<br>BLINDAJE |

30

**Rigid Row Marker**
**Traceur Rigide**
**Starrer Spurreisser**
**Marcasolco Rigido**
**Marcador Rígido**

**30-5**

5-PL31-001-B

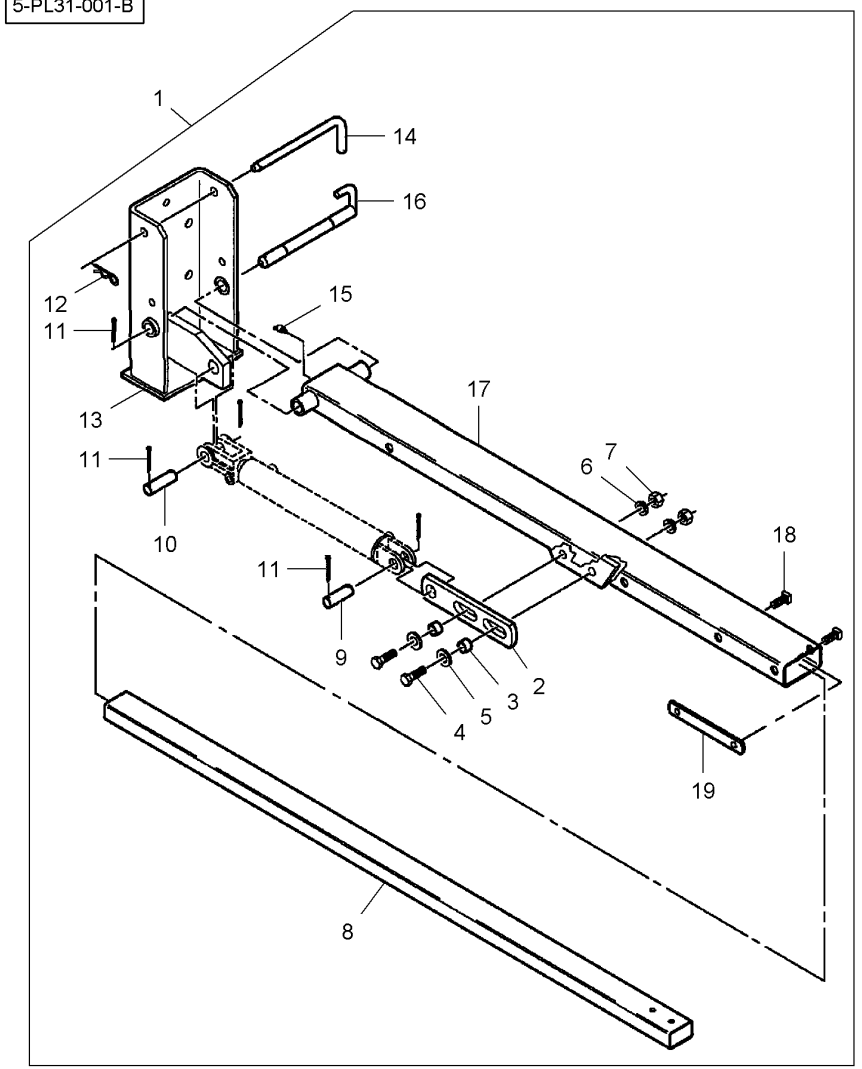


| | | | | | | |
|---|---|---|---|---|---|---|
| 1* | 6000280 | | 1 | KIT, ATTACHMENT | JEU ACCESSOIRES<br>KIT ACCESSORI | SATZ ANBAUTEILE<br>JUEGO ACCESORIO |
| 2* | 852271 | 1 | 2 | SLIDE | COULISSE<br>SLITTA | GLEITSTUECK<br>CORREDERA |
| 3* | N854141 | 1 | 4 | BUSH | BAGUE<br>BOCCOLA | RING<br>CASQUILLO |
| 4* | 70922664 | 1 5/8"-11 X 2 | 4 | BOLT UNC | BOULON UNC<br>BULLONE UNC | MASCH.SCHRB.UNC<br>PERNO UNC |
| 5* | 10030 | 1 | 4 | WASHER | RONDELLE<br>RONDELLA | SCHEIBE<br>ARANDELA |
| 6* | 70917373 | 1 5/8" | 4 | LOCK WASHER | RONDELLE FREIN<br>RONDELLA ARRESTO | SICHERUNGSRING<br>ARANDELA SEGURID |
| 7* | 70932665 | 1 5/8"-11 | 4 | NUT UNC | ECROU UNC<br>DADO UNC | MUTTER UNC<br>TUERCA UNC |
| 8* | W247797B | 1 | 2 | ARM | BRAS<br>BRACCIO | SCHARHEBEL<br>BRAZO |
| 9* | N15148 | 1 1" X 3 | 2 | CLEVIS PIN | AXE<br>PERNO D'ATTACCO | SPLINTBOLZEN<br>BULON CILINDRICO |
| 10* | W247969B | 1 1" X 3-3/8 | 2 | PIN | GOUPILLE<br>COPPIGLIA | STIFT<br>PASADOR |
| 11* | 932036 | 1 3/16" X 1-1/2 | 10 | SPLIT PIN | GOUPILLE FENDUE<br>COPIGLIA | SPALTBOLZEN<br>PASADOR HENDIDO |
| 12* | 98-2107 | 1 | 2 | HAIR PIN | EPINGLE<br>FORCINA | SICHERUNGSFEDER<br>RETENEDOR ELAST |
| 13* | 852282 | 1 ➡ ... | 2 | SUPPORT | SUPPORT<br>SOPPORTO | TRAGER<br>SOPORTE |
| 13* | 700163142 | 1 ➡ ... | 2 | SUPPORT | SUPPORT<br>SOPPORTO | TRAGER<br>SOPORTE |
| 14* | 851340 | 1 | 2 | PIN | GOUPILLE<br>COPPIGLIA | STIFT<br>PASADOR |
| 15* | 19575X | 1 1/4"-27 X 45° | 2 | GREASE NIPPLE | GRAISSEUR DROIT<br>INGRASSAT. | FETT-NIPPEL<br>ENGRASADOR |
| 16* | 851300 | 1 ➡ ... | 2 | PIN | GOUPILLE<br>COPPIGLIA | STIFT<br>PASADOR |
| 16* | 700163140 | 1 ➡ ... | 2 | PIN | GOUPILLE<br>COPPIGLIA | STIFT<br>PASADOR |
| 17* | 852272 | 1 | 2 | TUBE | TUBE<br>TUBO. | ROHR<br>TUBO. |
| 18* | 70923138 | 1 1/2"-13 X 1-1/2 | 4 | SETSCREW | VIS DE BLOCAGE<br>INSIEME VITI | STELLSCHRAUBE<br>SET SCREW |
| 19* | W247509B | 1 | 2 | CLAMP | COLLIER<br>FASCETTA | HALTESCHELLE<br>ABRAZADERA |

**Folding Row Marker**
**Traceur Rabattable**
**Klappspurreisser**
**Marcasolco Ribaltabile**
**Marcador Abatible**

**30-10**

5-PL32-001-B

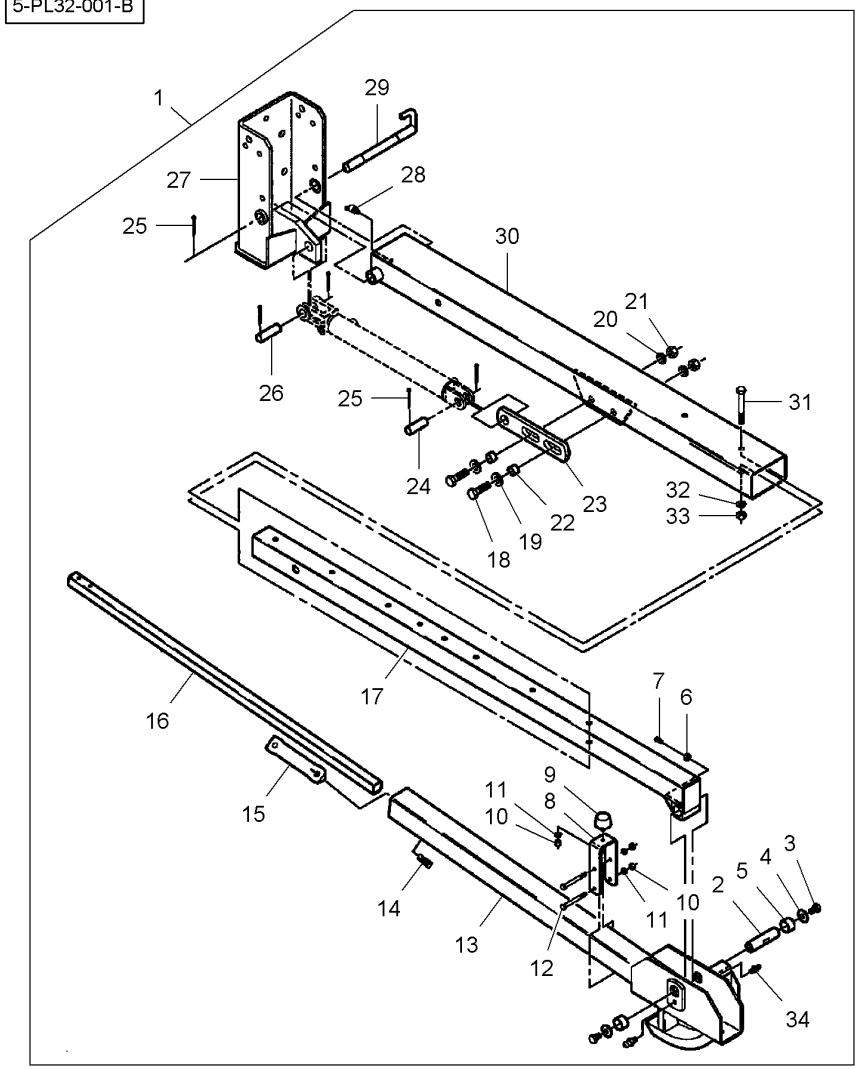


| | | | | | | |
|---|---|---|---|---|---|---|
| 1* | 6000281 | | 1 | KIT, ATTACHMENT | JEU ACCESSOIRES<br>KIT ACCESSORI | SATZ ANBAUTEILE<br>JUEGO ACCESORIO |
| 2* | 854116 | 1 | 2 | SHAFT | ARBRE<br>ALBERO | WELLE<br>ARBOL |
| 3* | 70926115 | 1 1/2"-13 X 3/4 | 4 | BOLT | BOULON<br>BULLONE | BOLZEN<br>BULON |
| 4* | 700717616 | 1 | 4 | WASHER | RONDELLE<br>RONDELLA | SCHEIBE<br>ARANDELA |
| 5* | N854117 | 1 | 4 | BUSH | BAGUE<br>BOCCOLA | RING<br>CASQUILLO |
| 6* | **70917421** | 1 3/8"-16 | 2 | NUT UNC | ECROU UNC<br>DADO UNC | MUTTER UNC<br>TUERCA UNC |
| 7* | NK1158 | 1 3/8"-16 X 3/4 | 2 | SCREW | VIS<br>VITE | SCHRAUBE<br>TORNILLO |
| 8* | W247479B | 1 | 2 | BRACKET | SUPPORT FIXATION<br>STAFFETTA | HALTEARM<br>SOPORTE |
| 9* | **700717576** | 1 | 2 | STOP | BUTEE<br>STOP | ANSCHLAG<br>PARO |
| 10* | **70916950** | 1 3/8"-16 | 6 | NUT UNC | ECROU UNC<br>DADO UNC | MUTTER UNC<br>TUERCA UNC |
| 11* | 70916965 | 1 3/8" | 6 | LOCK WASHER | RONDELLE FREIN<br>RONDELLA ARRESTO | SICHERUNGSRING<br>ARANDELA SEGURID |
| 12* | 70923938 | 1 3/8"-16 X 3-1/2 | 4 | BOLT UNC | BOULON UNC<br>BULLONE UNC | MASCH.SCHRB.UNC<br>PERNO UNC |
| 13* | 854714 | 1 ◀ | 1 | TUBE | TUBE<br>TUBO. | ROHR<br>TUBO. |
| 13* | 854713 | 1 ▶ | 1 | TUBE | TUBE<br>TUBO. | ROHR<br>TUBO. |
| 14* | 70923138 | 1 1/2"-13 X 1-1/2 | 4 | SETSCREW | VIS DE BLOCAGE<br>INSIEME VITI | STELLSCHRAUBE<br>SET SCREW |
| 15* | 852313 | 1 | 2 | CLAMP | COLLIER<br>FASCETTA | HALTESCHELLE<br>ABRAZADERA |
| 16* | 852294 | 1 | 2 | ARM | BRAS<br>BRACCIO | SCHARHEBEL<br>BRAZO |
| 17* | 854118 | 1 | 2 | TUBE | TUBE<br>TUBO. | ROHR<br>TUBO. |
| 18* | 70922664 | 1 5/8"-11 X 2 | 4 | BOLT UNC | BOULON UNC<br>BULLONE UNC | MASCH.SCHRB.UNC<br>PERNO UNC |
| 19* | 10030 | 1 | 4 | WASHER | RONDELLE<br>RONDELLA | SCHEIBE<br>ARANDELA |
| 20* | 70917373 | 1 5/8" | 4 | LOCK WASHER | RONDELLE FREIN<br>RONDELLA ARRESTO | SICHERUNGSRING<br>ARANDELA SEGURID |
| 21* | 70932665 | 1 5/8"-11 | 4 | NUT UNC | ECROU UNC<br>DADO UNC | MUTTER UNC<br>TUERCA UNC |
| 22* | N854141 | 1 | 4 | BUSH | BAGUE<br>BOCCOLA | RING<br>CASQUILLO |
| 23* | 852271 | 1 | 2 | SLIDE | COULISSE<br>SLITTA | GLEITSTUECK<br>CORREDERA |
| 24* | N15148 | 1 1" X 3 | 2 | CLEVIS PIN | AXE<br>PERNO D'ATTACCO | SPLINTBOLZEN<br>BULON CILINDRICO |
| 25* | 932036 | 1 3/16" X 1-1/2 | 10 | SPLIT PIN | GOUPILLE FENDUE<br>COPIGLIA | SPALTBOLZEN<br>PASADOR HENDIDO |

**Folding Row Marker**
**Traceur Rabattable**
**Klappspurreisser**
**Marcasolco Ribaltabile**
**Marcador Abatible**

**30-10**

5-PL32-001-B

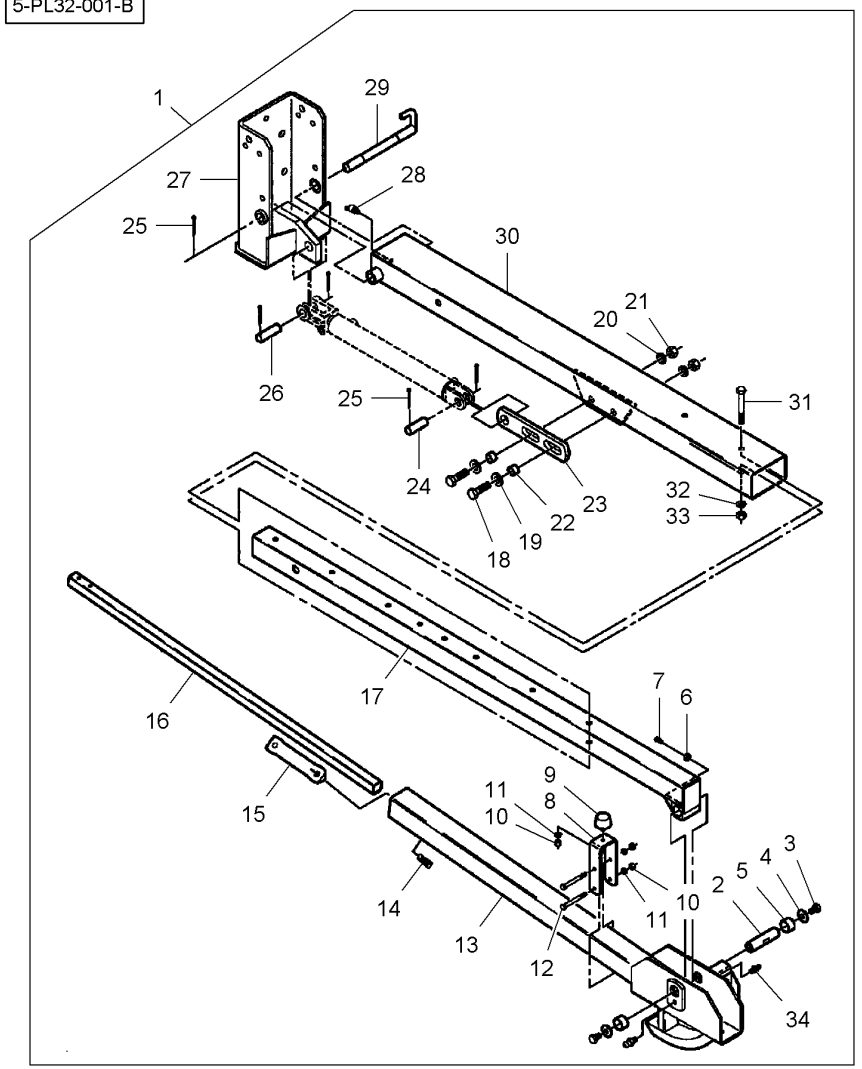


| | | | | | |
|---|---|---|---|---|---|
| 26* | W247969B | 1 | 1" X 3-3/8 | **2** PIN | GOUPILLE<br>COPPIGLIA<br>STIFT<br>PASADOR |
| 27* | 853678 | 1 ➡| | ... | **2** SUPPORT | SUPPORT<br>SOPPORTO<br>TRAGER<br>SOPORTE |
| 27* | 700163144 | 1 ➡ | ... | **2** SUPPORT | SUPPORT<br>SOPPORTO<br>TRAGER<br>SOPORTE |
| 28* | 19575X | 1 | 1/4"-27 X 45° | **2** GREASE NIPPLE | GRAISSEUR DROIT<br>INGRASSAT.<br>FETT-NIPPEL<br>ENGRASADOR |
| 29* | 851300 | 1 ➡| | ... | **2** PIN | GOUPILLE<br>COPPIGLIA<br>STIFT<br>PASADOR |
| 29* | 700163140 | 1 ➡ | ... | **2** PIN | GOUPILLE<br>COPPIGLIA<br>STIFT<br>PASADOR |
| 30* | 852284 | 1 | | **2** ARM | BRAS<br>BRACCIO<br>SCHARHEBEL<br>BRAZO |
| 31* | 7701600 | 1 | 1/2"-13 X 3-3/4 | **4** BOLT UNC | BOULON UNC<br>BULLONE UNC<br>MASCH.SCHRB.UNC<br>PERNO UNC |
| 32* | Y705046 | 1 | 1/2" | **4** LOCK WASHER | RONDELLE FREIN<br>RONDELLA ARRESTO<br>SICHERUNGSRING<br>ARANDELA SEGURID |
| 33* | 704031 | 1 | 1/2"-13 | **4** NUT UNC | ECROU UNC<br>DADO UNC<br>MUTTER UNC<br>TUERCA UNC |
| 34* | 70914465 | 1 | 1/8"-27 | **4** GREASE FITTING | GRAISSEUR<br>INGRASSATORE<br>DRUCKSCHMIERKOPF<br>ENGRASADOR |

**Folding Row Marker**
**Traceur Rabattable**
**Klappspurreisser**
**Marcasolco Ribaltabile**
**Marcador Abatible**

**30-15**

**Chain**
**Chaîne**
**Sägekette**
**Catena**
**Cadena**

5-PL32-006-A

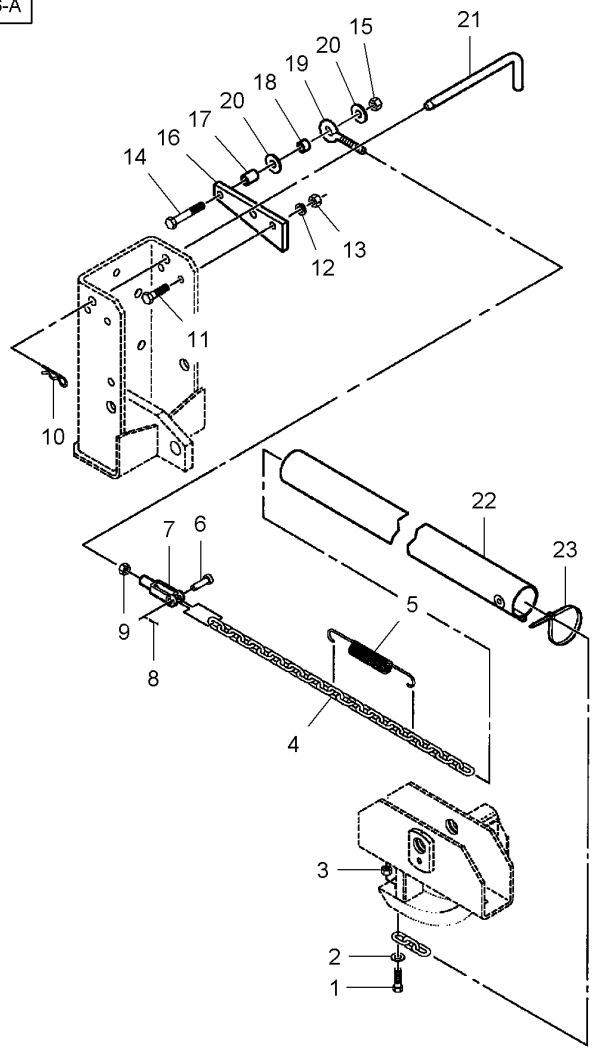


| | | | | | |
|---|---|---|---|---|---|
| 1* | 70920676 | 7/16"-14 X 1 | 2 | CAPSCREW | VIS BOUCHON<br>TAPPO A VITE<br>HUTSCHRAUBE<br>TORNILLO TAPON |
| 2* | K820 | | 2 | WASHER | RONDELLE<br>RONDELLA<br>SCHEIBE<br>ARANDELA |
| 3* | 10164 | 7/16"-14 | 2 | LOCKNUT | ECROU FREIN<br>AUTOBLOCCANTE<br>SICHERUNGSMUTTER<br>CONTRATUERCA |
| 4* | 853607 | | 2 | CHAIN | CHAINE<br>CATENA<br>KETTE<br>CADENA |
| 5* | **W245395B** | | 2 | SPRING | RESSORT<br>MOLLA<br>FEDER<br>MUELLE |
| 6* | 14968 | | 2 | RIVET | RIVET<br>RIVETTO<br>NIET<br>REMACHE |
| 7* | W500053E | | 2 | CLEVIS | CHAPE<br>GANCIO D'ATTACCO<br>GABELSTUECK<br>GANCHO SEGURI. |
| 8* | 70918452 | 1/8" X 1 | 2 | SPLIT PIN | GOUPILLE FENDUE<br>COPIGLIA<br>SPALTBOLZEN<br>PASADOR HENDIDO |
| 9* | 353426X1 | 7/16"-20 | 2 | NUT UNF | ECROU UNF<br>DADO UNF<br>MUTTER UNF<br>TUERCA UNF |
| 10* | 98-2107 | | 2 | HAIR PIN | EPINGLE<br>FORCINA<br>SICHERUNGSFEDER<br>RETENEDOR ELAST |
| 11* | 70919089 | 1/2"-13 X 1-3/4 | 4 | BOLT UNC | BOULON UNC<br>BULLONE UNC<br>MASCH.SCHRB.UNC<br>PERNO UNC |
| 12* | Y705046 | 1/2" | 4 | LOCK WASHER | RONDELLE FREIN<br>RONDELLA ARRESTO<br>SICHERUNGSRING<br>ARANDELA SEGURID |
| 13* | 704031 | 1/2"-13 | 4 | NUT UNC | ECROU UNC<br>DADO UNC<br>MUTTER UNC<br>TUERCA UNC |
| 14* | 70923320 | 1/2"-13 X 3 | 2 | BOLT UNC | BOULON UNC<br>BULLONE UNC<br>MASCH.SCHRB.UNC<br>PERNO UNC |
| 15* | W915793-4 | 1/2"-13 | 2 | LOCKNUT | ECROU FREIN<br>AUTOBLOCCANTE<br>SICHERUNGSMUTTER<br>CONTRATUERCA |
| 16* | 852297 | | 2 | BRACKET | SUPPORT FIXATION<br>STAFFETTA<br>HALTEARM<br>SOPORTE |
| 17* | WSP1344 | | 2 | SPACER | ENTRETOISE<br>DISTANZIALE<br>ABSTANDSTUECK<br>DISCO ESPACIADOR |
| 18* | WCF2686 | | 2 | TRUNNION | TOURILLON<br>CROCIERA<br>ZAPFEN<br>PERNO |
| 19* | W247512B | 7/16"-14 | 2 | EYE BOLT | BOULON A OEIL<br>BULLONE A OCCHIO<br>AUGENSCHRAUBE<br>ARMELLA |
| 20* | 70918431 | 1/2" | 4 | FLAT WASHER | RONDELLE PLATE<br>RONDELLE PIANA<br>UNTERLEGSCHEIBEN<br>ARANDELA PLANA |
| 21* | 851340 | | 2 | PIN | GOUPILLE<br>COPPIGLIA<br>STIFT<br>PASADOR |
| 22* | N853119 | | 2 | SLEEVE | MANCHON<br>MANICOTTO<br>HUELSE<br>MANGUITO |
| 23* | 17413 | | 2 | CABLE TIE | ATTACHE CABLE<br>FASCETTA CAVI<br>KABELBINDER<br>APRIETACABLES |

**Folding Row Marker**
**Traceur Rabattable**
**Klappspurreisser**
**Marcasolco Ribaltabile**
**Marcador Abatible**

**30-20**

**6 Wide Rows - 8 Rows**
**6 Rangs Larges - 8 Rangs**
**6 Breite Reihen - 8 Reihen**
**6 Lineas Larga - 8 Lineas**
**6 Lineas Ancha - 8 Lineas**

5-PL32-008-A

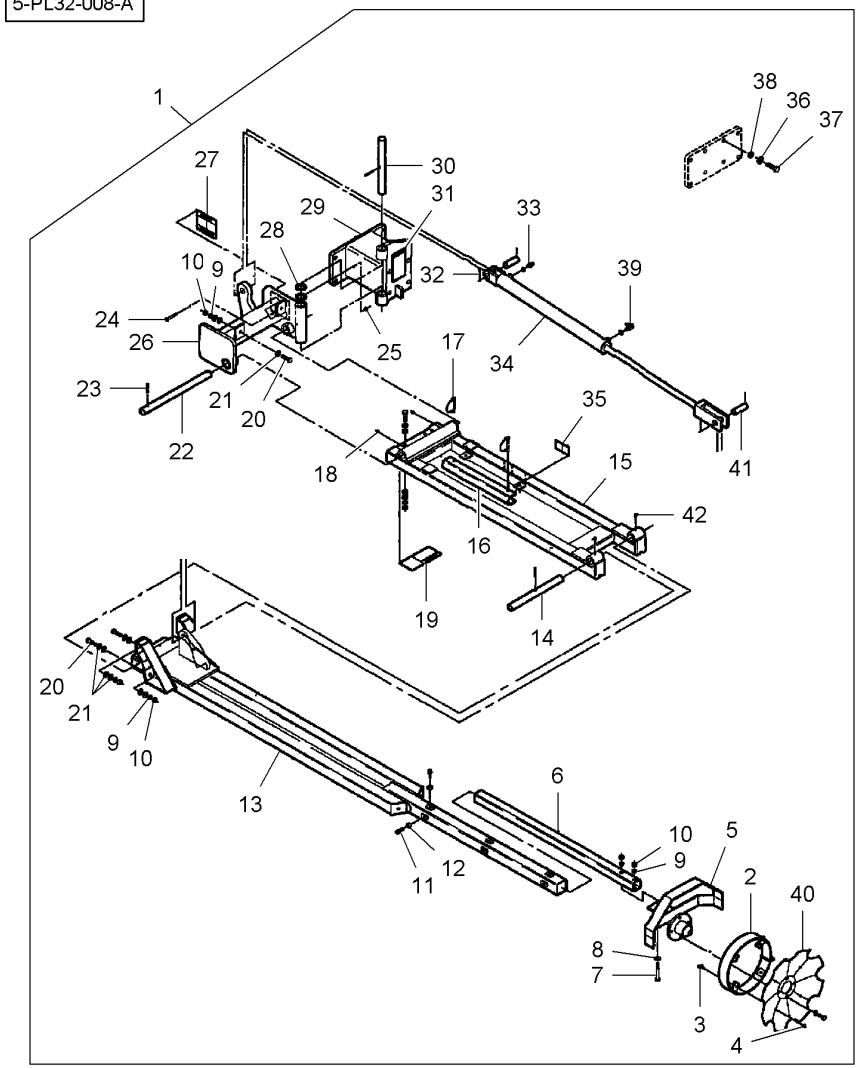


| | | | | | | |
|---|---|---|---|---|---|---|
| 1* | 6100376 | [A] | 1 | KIT, ATTACHMENT | JEU ACCESSOIRES<br>KIT ACCESSORI | SATZ ANBAUTEILE<br>JUEGO ACCESORIO |
| 1* | 6100375 | [B] | 1 | KIT, ATTACHMENT | JEU ACCESSOIRES<br>KIT ACCESSORI | SATZ ANBAUTEILE<br>JUEGO ACCESORIO |
| 2 | BA5182 | 1 | 2 | RING | ANNEAU<br>ANELLO | RING.<br>ANILLO |
| 3* | 703579 | 1 5/16"-18 X 1 | 8 | BOLT UNC | BOULON UNC<br>BULLONE UNC | MASCH.SCHRB.UNC<br>PERNO UNC |
| 4* | 704163 | 1 5/16"-18 | 8 | LOCKNUT | ECROU FREIN<br>AUTOBLOCCANTE | SICHERUNGSMUTTER<br>CONTRATUERCA |
| 5 | BA5946 | 1 ◀<br>30-30 No 14 | 1 | KIT, ATTACHMENT | JEU ACCESSOIRES<br>KIT ACCESSORI | SATZ ANBAUTEILE<br>JUEGO ACCESORIO |
| 5 | BA5945 | 1 ▶<br>30-30 No 14 | 1 | KIT, ATTACHMENT | JEU ACCESSOIRES<br>KIT ACCESSORI | SATZ ANBAUTEILE<br>JUEGO ACCESORIO |
| 6 | BD5879 | 1 | 2 | TUBE | TUBE<br>TUBO. | ROHR<br>TUBO. |
| 7* | 773374 | 1 1/2"-13 X 3-1/2 | 4 | BOLT UNC | BOULON UNC<br>BULLONE UNC | MASCH.SCHRB.UNC<br>PERNO UNC |
| 8* | Y705624 | 1 1/2" | 4 | WASHER | RONDELLE<br>RONDELLA | SCHEIBE<br>ARANDELA |
| 9* | 705046 | 1 1/2" | 20 | LOCK WASHER | RONDELLE FREIN<br>RONDELLA ARRESTO | SICHERUNGSRING<br>ARANDELA SEGURID |
| 10* | 704031 | 1 1/2"-13 | 20 | NUT UNC | ECROU UNC<br>DADO UNC | MUTTER UNC<br>TUERCA UNC |
| 11* | W909571-4 | 1 1/2"-13 X 1-1/4 | 4 | SETSCREW | VIS DE BLOCAGE<br>INSIEME VITI | STELLSCHRAUBE<br>SET SCREW |
| 12* | 704056 | 1 1/2"-13 | 4 | NUT UNC | ECROU UNC<br>DADO UNC | MUTTER UNC<br>TUERCA UNC |
| 13* | N858034 | 1 [A]<br>◀ | 1 | MARKER | MARQUEUR<br>TACCA | MARKIERGS.PFEIL<br>MARCADOR |
| 13* | N858085 | 1 [B]<br>◀ | 1 | MARKER | MARQUEUR<br>TACCA | MARKIERGS.PFEIL<br>MARCADOR |
| 13* | N858035 | 1 [A]<br>▶ | 1 | MARKER | MARQUEUR<br>TACCA | MARKIERGS.PFEIL<br>MARCADOR |
| 13* | N858086 | 1 [B]<br>▶ | 1 | MARKER | MARQUEUR<br>TACCA | MARKIERGS.PFEIL<br>MARCADOR |
| 14 | BD5882 | 1 | 2 | SHAFT | ARBRE<br>ALBERO | WELLE<br>ARBOL |
| 15 | N858036 | 1 | 2 | MARKER | MARQUEUR<br>TACCA | MARKIERGS.PFEIL<br>MARCADOR |
| 16 | BD7173 | 1 | 2 | RAM | VERIN<br>CILINDRO IDRAUL. | HYDR.ZYLINDER<br>ARIETE |
| 17 | W245430B | 1 | 4 | CLIP | PATTE D'ATTACHE<br>FERMAGLIO | SCHELLE<br>CLIP |
| 18* | 77032 | 1 | 4 | GREASE FITTING | GRAISSEUR<br>INGRASSATORE | DRUCKSCHMIERKOPF<br>ENGRASADOR |
| 19 | N858711 | 1 | 2 | DECAL | DECALCOMANIE<br>DECALCOMANIA | AUFKLEBER<br>CALCOMANIA |
| 20* | 703983 | 1 1/2"-13 X 1-3/4 | 16 | BOLT UNC | BOULON UNC<br>BULLONE UNC | MASCH.SCHRB.UNC<br>PERNO UNC |
| 21 | 700717693 | 1 | 60 | WASHER | RONDELLE<br>RONDELLA | SCHEIBE<br>ARANDELA |

**Folding Row Marker**
**Traceur Rabattable**
**Klappspurreisser**
**Marcasolco Ribaltabile**
**Marcador Abatible**

**30-20**

**6 Wide Rows - 8 Rows**
**6 Rangs Larges - 8 Rangs**
**6 Breite Reihen - 8 Reihen**
**6 Lineas Larga - 8 Lineas**
**6 Lineas Ancha - 8 Lineas**

5-PL32-008-A

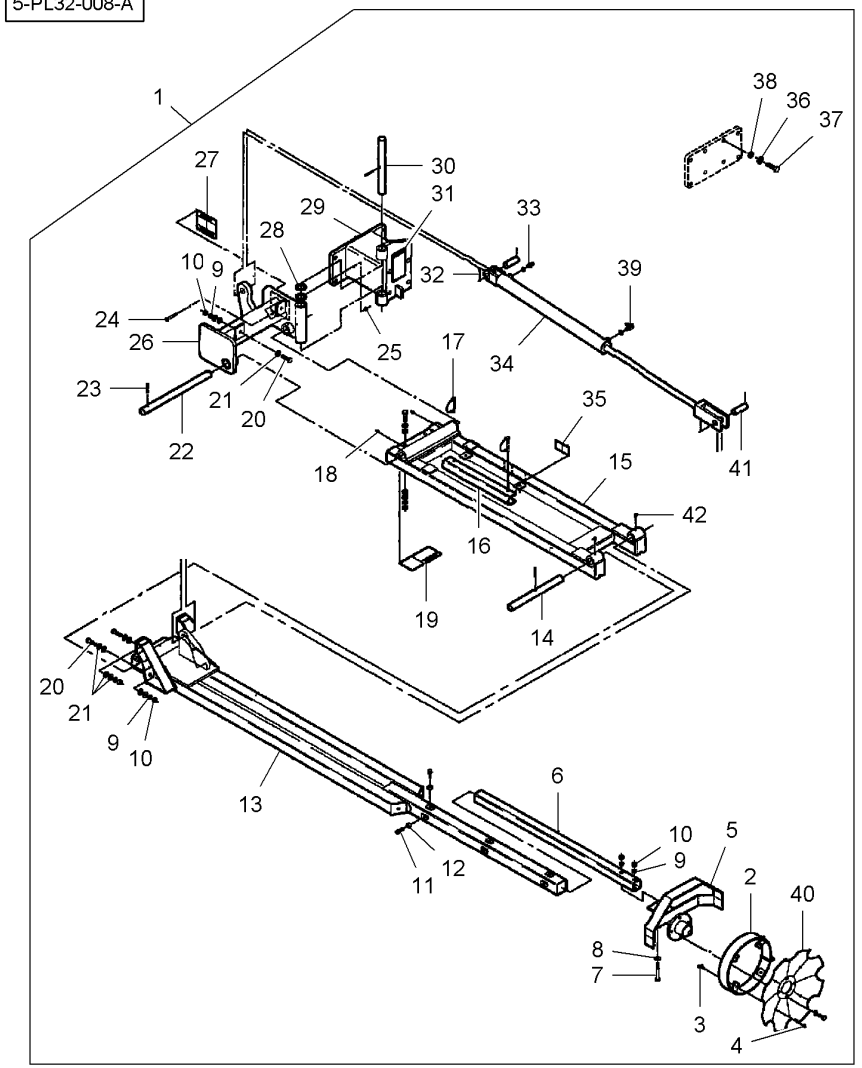


| | | | | | | |
|---|---|---|---|---|---|---|
| 22 | BD5881 | 1 | | 2 | SHAFT | ARBRE<br>ALBERO | WELLE<br>ARBOL |
| 23* | 63222 | 1 | 3/8" X 2 | 6 | PIN | GOUPILLE<br>COPPIGLIA | STIFT<br>PASADOR |
| 24* | 701888 | 1 | 3/8"-16 X 2-1/4 | 2 | BOLT UNC | BOULON UNC<br>BULLONE UNC | MASCH.SCHRB.UNC<br>PERNO UNC |
| 25 | 7704141 | 1 | 3/8"-16 | 2 | LOCKNUT | ECROU FREIN<br>AUTOBLOCCANTE | SICHERUNGSMUTTER<br>CONTRATUERCA |
| 26 | N858701 | 1 ◀ | | 1 | BASE | SEMELLE<br>BASE | FUSSPLATTE<br>BASE |
| 26 | N858702 | 1 ▶ | | 1 | BASE | SEMELLE<br>BASE | FUSSPLATTE<br>BASE |
| 27 | B7100-01 | 26 | | 1 | DECAL | DECALCOMANIE<br>DECALCOMANIA | AUFKLEBER<br>CALCOMANIA |
| 28 | K4795 | 1 | | 4 | WASHER | RONDELLE<br>RONDELLA | SCHEIBE<br>ARANDELA |
| 29 | N857260 | 1 ◀ | | 1 | BRACKET | SUPPORT FIXATION<br>STAFFETTA | HALTEARM<br>SOPORTE |
| 29 | N857261 | 1 ▶ | | 1 | BRACKET | SUPPORT FIXATION<br>STAFFETTA | HALTEARM<br>SOPORTE |
| 30 | BD5884 | 1 | | 2 | SHAFT | ARBRE<br>ALBERO | WELLE<br>ARBOL |
| 31 | N857033 | 1 | | 2 | DECAL | DECALCOMANIE<br>DECALCOMANIA | AUFKLEBER<br>CALCOMANIA |
| 32* | 62257 | 1 | 3/16" X 1-1/2 | 8 | SPLIT PIN | GOUPILLE FENDUE<br>COPIGLIA | SPALTBOLZEN<br>PASADOR HENDIDO |
| 33 | 846634 | 1 | 9/16"-18 | 4 | UNION | RACCORD<br>RACCORDO | VERSCHRAUBUNG<br>RACOR |
| 33* | **738468** | 33 | | 1 | O RING | JOINT TORIQUE<br>GIUNTO DI TENUTA | O-RING<br>JUNTA TOROIDAL |
| 34 | 855104 | 1 | 30-30 No 2 | 2 | RAM | VERIN<br>CILINDRO IDRAUL. | HYDR.ZYLINDER<br>ARIETE |
| 35 | N858727 | 1 | | 2 | DECAL | DECALCOMANIE<br>DECALCOMANIA | AUFKLEBER<br>CALCOMANIA |
| 36* | 705061 | 1 | 5/8" | 8 | LOCK WASHER | RONDELLE FREIN<br>RONDELLA ARRESTO | SICHERUNGSRING<br>ARANDELA SEGURID |
| 37* | 701771 | 1 | 5/8"-11 X 2-1/4 | 8 | BOLT UNC | BOULON UNC<br>BULLONE UNC | MASCH.SCHRB.UNC<br>PERNO UNC |
| 38* | 11538 | 1 | | 8 | WASHER | RONDELLE<br>RONDELLA | SCHEIBE<br>ARANDELA |
| 39* | 7746555 | 1 | 9/16"-18 X 90° | 2 | ELBOW NIPPLE | RACCORD COUDE<br>NIPPLO GOMITO | WINKELSTUTZEN<br>CODO DE UNION |
| 39* | **738468** | 39 | | 1 | O RING | JOINT TORIQUE<br>GIUNTO DI TENUTA | O-RING<br>JUNTA TOROIDAL |
| 40 | BD5867 | 1 | | 2 | DISC | DISQUE<br>DISCO | SCHEIBE<br>DISCO |
| 41* | 15148 | 1 | 1" X 3 | 4 | CLEVIS PIN | AXE<br>PERNO D'ATTACCO | SPLINTBOLZEN<br>BULON CILINDRICO |
| 42* | W939049 | 1 | 1/4"-28 X 90° | 4 | GREASE FITTING | GRAISSEUR<br>INGRASSATORE | DRUCKSCHMIERKOPF<br>ENGRASADOR |

| | | |
|---|---|---|
| **Folding Row Marker**<br>**Traceur Rabattable**<br>**Klappspurreisser**<br>**Marcasolco Ribaltabile**<br>**Marcador Abatible** | **30-20** | **6 Wide Rows - 8 Rows**<br>**6 Rangs Larges - 8 Rangs**<br>**6 Breite Reihen - 8 Reihen**<br>**6 Lineas Larga - 8 Lineas**<br>**6 Lineas Ancha - 8 Lineas** |

5-PL32-008-A

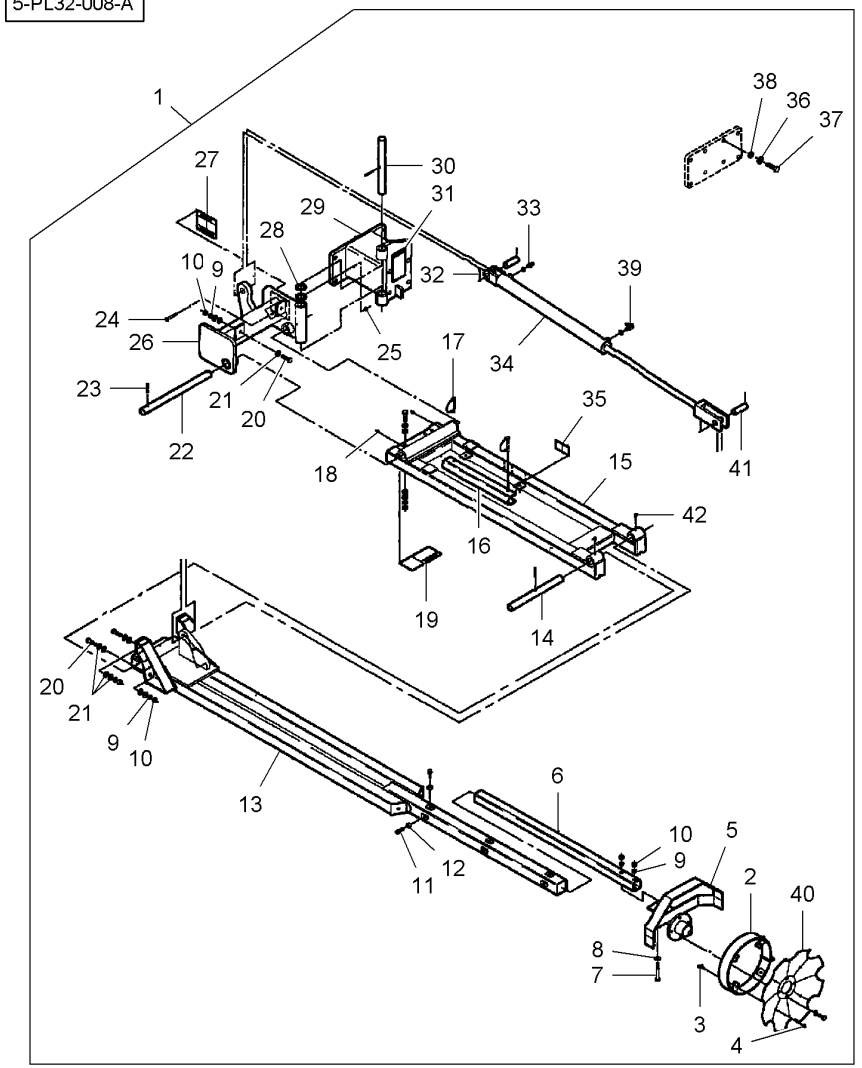


[A] 6 ROW WIDE - 8 ROW NARROW
6 RANGS LARGES - 8 RANGS ETROITS
6 BREITE REIHE - 8 SCHMAL REIHE
6 LINEAS LARGA - 8 LINEAS STRETTA
6 LINEAS ANCHA - 8 LINEAS ESTRECHO

[B] 8 ROW WIDE
8 RANGS LARGES
8 BREITE REIHE
8 LINEA LARGA
8 LINEA ANCHA

**Folding Row Marker**
**Traceur Rabattable**
**Klappspurreisser**
**Marcasolco Ribaltabile**
**Marcador Abatible**

# 30-25

**6 Wide Rows - 8 Rows**
**6 Rangs Larges - 8 Rangs**
**6 Breite Reihen - 8 Reihen**
**6 Lineas Larga - 8 Lineas**
**6 Lineas Ancha - 8 Lineas**

5-PL32-002-B

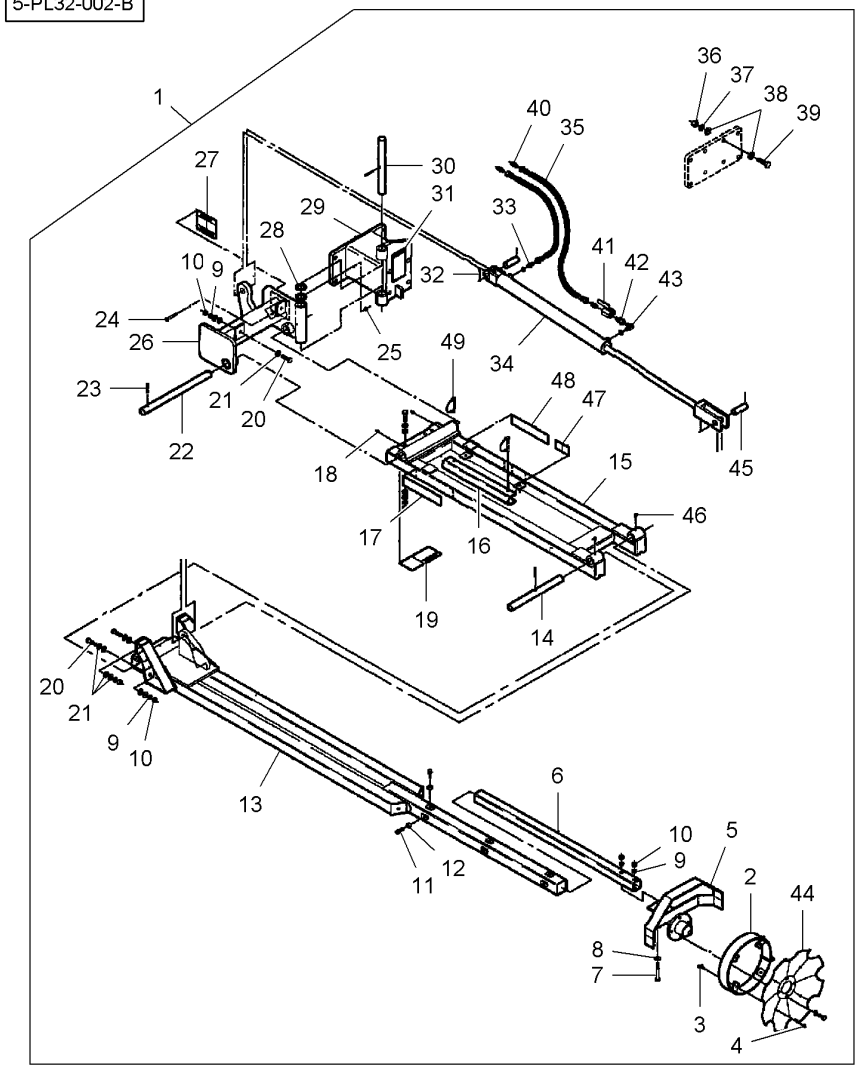


| | | | | | | |
|---|---|---|---|---|---|---|
| 1 | 6000492 | [C] 30-30 No 1 | 1 | KIT, ATTACHMENT | JEU ACCESSOIRES<br>KIT ACCESSORI | SATZ ANBAUTEILE<br>JUEGO ACCESORIO |
| 1 | 6000490 | [D] | 1 | KIT, ATTACHMENT | JEU ACCESSOIRES<br>KIT ACCESSORI | SATZ ANBAUTEILE<br>JUEGO ACCESORIO |
| 2 | BA5182 | 1 | 2 | RING | ANNEAU<br>ANELLO | RING.<br>ANILLO |
| 3 | 70921333 | 1 5/16"-18 X 1 | 8 | BOLT UNC | BOULON UNC<br>BULLONE UNC | MASCH.SCHRB.UNC<br>PERNO UNC |
| 4 | Y704163 | 1 5/16"-18 | 8 | LOCKNUT | ECROU FREIN<br>AUTOBLOCCANTE | SICHERUNGSMUTTER<br>CONTRATUERCA |
| 5 | BA5946 | 1 ◀ 30-30 No 14 | 1 | KIT, ATTACHMENT | JEU ACCESSOIRES<br>KIT ACCESSORI | SATZ ANBAUTEILE<br>JUEGO ACCESORIO |
| 5 | BA5945 | 1 ▶ 30-30 No 14 | 1 | KIT, ATTACHMENT | JEU ACCESSOIRES<br>KIT ACCESSORI | SATZ ANBAUTEILE<br>JUEGO ACCESORIO |
| 6 | BD5879 | 1 | 2 | TUBE | TUBE<br>TUBO. | ROHR<br>TUBO. |
| 7 | 70920990 | 1 1/2"-13 X 3-1/2 | 4 | BOLT UNC | BOULON UNC<br>BULLONE UNC | MASCH.SCHRB.UNC<br>PERNO UNC |
| 8 | Y705624 | 1 1/2" | 4 | WASHER | RONDELLE<br>RONDELLA | SCHEIBE<br>ARANDELA |
| 9* | Y705046 | 1 1/2" | 20 | LOCK WASHER | RONDELLE FREIN<br>RONDELLA ARRESTO | SICHERUNGSRING<br>ARANDELA SEGURID |
| 10 | 375098X1 | 1 1/2"-13 | 20 | NUT UNC | ECROU UNC<br>DADO UNC | MUTTER UNC<br>TUERCA UNC |
| 11 | 70922695 | 1 1/2"-13 X 1-1/4 | 4 | SETSCREW | VIS DE BLOCAGE<br>INSIEME VITI | STELLSCHRAUBE<br>SET SCREW |
| 12* | 70913744 | 1 1/2"-13 | 4 | NUT UNC | ECROU UNC<br>DADO UNC | MUTTER UNC<br>TUERCA UNC |
| 13 | N858034 | 1 [C] ◀ | 1 | MARKER | MARQUEUR<br>TACCA | MARKIERGS.PFEIL<br>MARCADOR |
| 13 | N858085 | 1 [D] ◀ | 1 | MARKER | MARQUEUR<br>TACCA | MARKIERGS.PFEIL<br>MARCADOR |
| 13 | N858035 | 1 [C] ▶ | 1 | MARKER | MARQUEUR<br>TACCA | MARKIERGS.PFEIL<br>MARCADOR |
| 13 | N858086 | 1 [D] ▶ | 1 | MARKER | MARQUEUR<br>TACCA | MARKIERGS.PFEIL<br>MARCADOR |
| 14 | BD5882 | 1 | 2 | SHAFT | ARBRE<br>ALBERO | WELLE<br>ARBOL |
| 15 | N858036 | 1 | 2 | MARKER | MARQUEUR<br>TACCA | MARKIERGS.PFEIL<br>MARCADOR |
| 16 | BD7173 | 1 | 2 | RAM | VERIN<br>CILINDRO IDRAUL. | HYDR.ZYLINDER<br>ARIETE |
| 17 | 700717402 | 1 [A] | 2 | REFLECTOR | CATADIOPTRE<br>CATADIOTTRO | RUECKSTRAHLER<br>LUZ REFRACTANTE |
| 18 | 70914687 | 1 | 4 | GREASE FITTING | GRAISSEUR<br>INGRASSATORE | DRUCKSCHMIERKOPF<br>ENGRASADOR |
| 19 | N858711 | 1 | 2 | DECAL | DECALCOMANIE<br>DECALCOMANIA | AUFKLEBER<br>CALCOMANIA |
| 20 | 70919089 | 1 1/2"-13 X 1-3/4 | 16 | BOLT UNC | BOULON UNC<br>BULLONE UNC | MASCH.SCHRB.UNC<br>PERNO UNC |
| 21 | 700717693 | 1 | 60 | WASHER | RONDELLE<br>RONDELLA | SCHEIBE<br>ARANDELA |

**Folding Row Marker**
**Traceur Rabattable**
**Klappspurreisser**
**Marcasolco Ribaltabile**
**Marcador Abatible**

**30-25**

**6 Wide Rows - 8 Rows**
**6 Rangs Larges - 8 Rangs**
**6 Breite Reihen - 8 Reihen**
**6 Lineas Larga - 8 Lineas**
**6 Lineas Ancha - 8 Lineas**

5-PL32-002-B

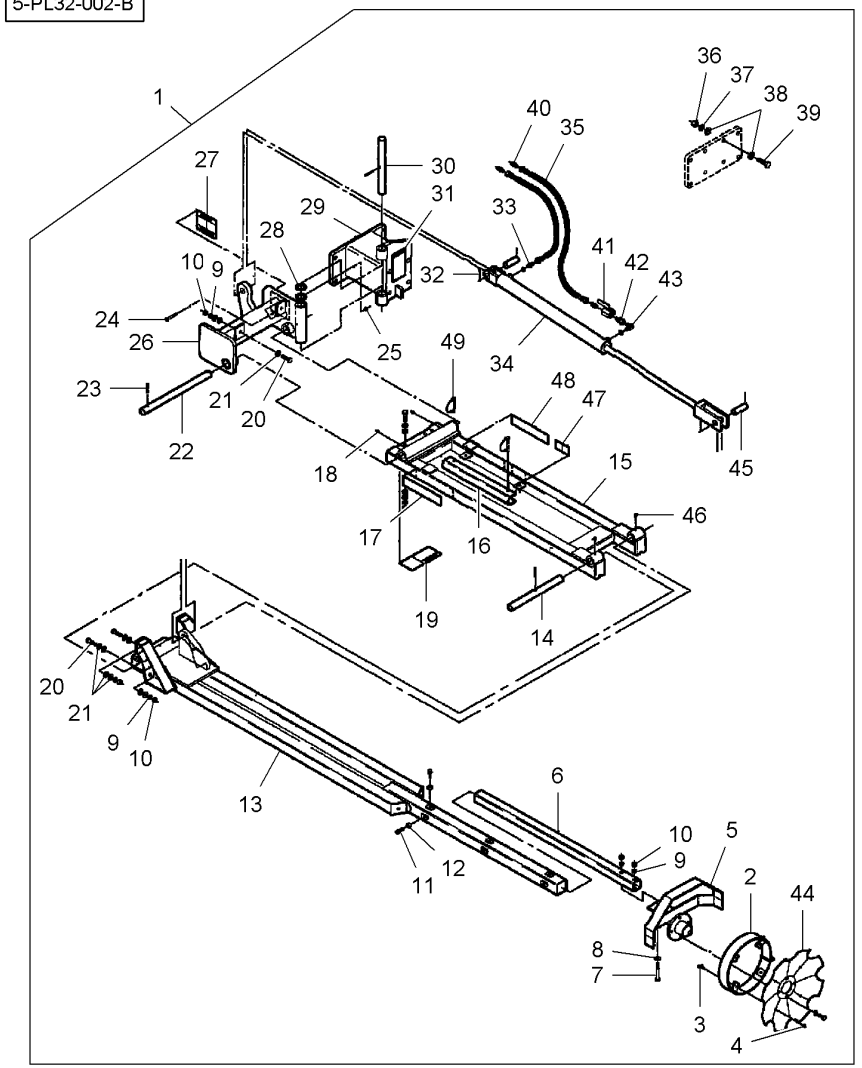


| | | | | | | |
|---|---|---|---|---|---|---|
| 22 | BD5881 | 1 | | **2** | SHAFT | ARBRE<br>ALBERO | WELLE<br>ARBOL |
| 23 | 70916767 | 1 | 3/8" X 2 | **6** | PIN | GOUPILLE<br>COPPIGLIA | STIFT<br>PASADOR |
| 24 | 354267X1 | 1 | 3/8"-16 X 2-1/4 | **2** | BOLT UNC | BOULON UNC<br>BULLONE UNC | MASCH.SCHRB.UNC<br>PERNO UNC |
| 25 | 7704141 | 1 | 3/8"-16 | **2** | LOCKNUT | ECROU FREIN<br>AUTOBLOCCANTE | SICHERUNGSMUTTER<br>CONTRATUERCA |
| 26 | N858701 | 1 ◀ | | **1** | BASE | SEMELLE<br>BASE | FUSSPLATTE<br>BASE |
| 26 | N858702 | 1 ▶ | | **1** | BASE | SEMELLE<br>BASE | FUSSPLATTE<br>BASE |
| 27 | B7100-01 | 26 | | **1** | DECAL | DECALCOMANIE<br>DECALCOMANIA | AUFKLEBER<br>CALCOMANIA |
| 28 | K4795 | 1 | | **4** | WASHER | RONDELLE<br>RONDELLA | SCHEIBE<br>ARANDELA |
| 29 | N857260 | 1 ◀ | | **1** | BRACKET | SUPPORT FIXATION<br>STAFFETTA | HALTEARM<br>SOPORTE |
| 29 | N857261 | 1 ▶ | | **1** | BRACKET | SUPPORT FIXATION<br>STAFFETTA | HALTEARM<br>SOPORTE |
| 30 | BD5884 | 1 | | **2** | SHAFT | ARBRE<br>ALBERO | WELLE<br>ARBOL |
| 31 | N857033 | 1 | | **2** | DECAL | DECALCOMANIE<br>DECALCOMANIA | AUFKLEBER<br>CALCOMANIA |
| 32 | 932036 | 1 | 3/16" X 1-1/2 | **8** | SPLIT PIN | GOUPILLE FENDUE<br>COPIGLIA | SPALTBOLZEN<br>PASADOR HENDIDO |
| 33* | 846634 | 1 | | **4** | UNION | RACCORD<br>RACCORDO | VERSCHRAUBUNG<br>RACOR |
| 33* | 831452M1 | 33 | | **1** | O RING | JOINT TORIQUE<br>GIUNTO DI TENUTA | O-RING<br>JUNTA TOROIDAL |
| 34 | 855104 | 1 | 30-30 No 2 | **2** | RAM | VERIN<br>CILINDRO IDRAUL. | HYDR.ZYLINDER<br>ARIETE |
| 35 | 854275 | 1 ◀▶ | 17"-1/2 | **4** | HOSE | DURITE<br>TUBO FLESSIBILE | SCHLAUCH<br>TUBO DE GOMA |
| 36 | 353433X1 | 1 | 5/8" | **16** | LOCK WASHER | RONDELLE FREIN<br>RONDELLA ARRESTO | SICHERUNGSRING<br>ARANDELA SEGURID |
| 37 | 70926937 | 1 | 5/8"-11 | **16** | LOCKNUT | ECROU FREIN<br>AUTOBLOCCANTE | SICHERUNGSMUTTER<br>CONTRATUERCA |
| 38 | 11538 | 1 | 5/8" | **16** | WASHER | RONDELLE<br>RONDELLA | SCHEIBE<br>ARANDELA |
| 39 | 70922664 | 1 | 5/8"-11 X 2 | **16** | BOLT UNC | BOULON UNC<br>BULLONE UNC | MASCH.SCHRB.UNC<br>PERNO UNC |
| 40 | 846477 | 1 | | **4** | UNION | RACCORD<br>RACCORDO | VERSCHRAUBUNG<br>RACOR |
| 41 | 854851 | 1 | | **2** | VALVE | SOUPAPE<br>VALVOLA | VENTIL<br>VALVULA |
| 42 | 700709216 | 1 | | **2** | ADAPTOR | ADAPTATEUR<br>ADATTATORE | REDUZIERNIPPEL<br>ADAPTADOR |
| 42* | 831452M1 | 42 | | **1** | O RING | JOINT TORIQUE<br>GIUNTO DI TENUTA | O-RING<br>JUNTA TOROIDAL |
| 43 | 357197X91 | 1 | | **2** | ELBOW NIPPLE | RACCORD COUDE<br>NIPPLO GOMITO | WINKELSTUTZEN<br>CODO DE UNION |

**Folding Row Marker**
**Traceur Rabattable**
**Klappspurreisser**
**Marcasolco Ribaltabile**
**Marcador Abatible**

**30-25**

**6 Wide Rows - 8 Rows**
**6 Rangs Larges - 8 Rangs**
**6 Breite Reihen - 8 Reihen**
**6 Lineas Larga - 8 Lineas**
**6 Lineas Ancha - 8 Lineas**

5-PL32-002-B

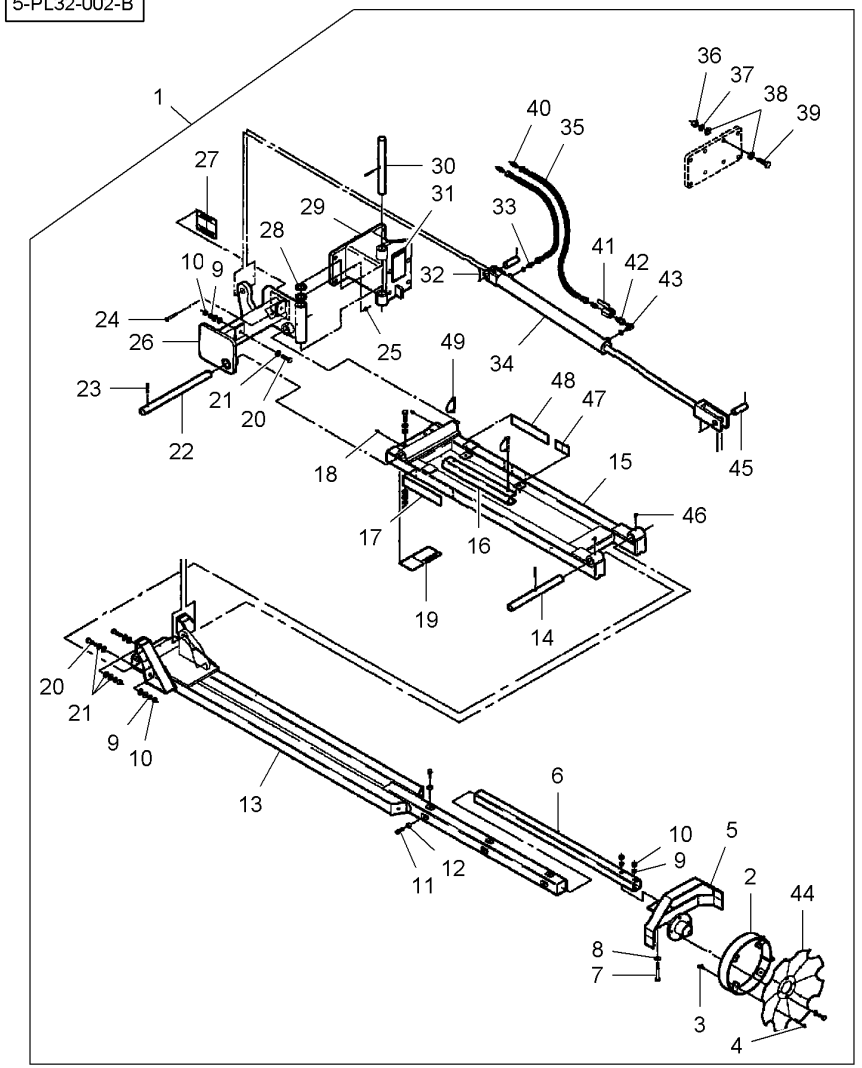


| | | | | | | |
|---|---|---|---|---|---|---|
| 43* | 831452M1 | 50 | | **1** | O RING | JOINT TORIQUE<br>GIUNTO DI TENUTA<br>JUNTA TOROIDAL |
| 44 | BD5867 | 1 | | **2** | DISC | DISQUE<br>DISCO<br>SCHEIBE<br>DISCO |
| 45 | N15148 | 1 | 1" X 3 | **4** | CLEVIS PIN | AXE<br>PERNO D'ATTACCO<br>SPLINTBOLZEN<br>BULON CILINDRICO |
| 46 | 70915019 | 1 | | **4** | GREASE FITTING | GRAISSEUR<br>INGRASSATORE<br>DRUCKSCHMIERKOPF<br>ENGRASADOR |
| 47 | N858727 | 1 | | **2** | DECAL | DECALCOMANIE<br>DECALCOMANIA<br>AUFKLEBER<br>CALCOMANIA |
| 48 | 700717403 | 1 | [B] | **2** | REFLECTOR | CATADIOPTRE<br>CATADIOTTRO<br>RUECKSTRAHLER<br>LUZ REFRACTANTE |
| 49 | W245430B | 1 | | **4** | CLIP | PATTE D'ATTACHE<br>FERMAGLIO<br>SCHELLE<br>CLIP |

[A] RED
ROUGE
ROT
ROSSO
ROJO

[B] YELLOW
JAUNE
GELB
GIALLO
AMARILLO

[C] 6 ROW WIDE - 8 ROW NARROW
6 RANGS LARGES - 8 RANGS ETROITS
6 BREITE REIHE - 8 SCHMAL REIHE
6 LINEAS LARGA - 8 LINEAS STRETTA
6 LINEAS ANCHA - 8 LINEAS ESTRECHO

[D] 8 ROW WIDE
8 RANGS LARGES
8 BREITE REIHE
8 LINEA LARGA
8 LINEA ANCHA

**Folding Row Marker**
**Traceur Rabattable**
**Klappspurreisser**
**Marcasolco Ribaltabile**
**Marcador Abatible**

**30-30**

**6 Wide Rows - 8 Narrow Rows**
**6 Rangs Larges - 8 Rangs Etroits**
**6 Breite Reihen - 8 Schmal Reihen**
**6 Lineas Larga - 8 Lineas Stretti**
**6 Lineas Ancha - 8 Lineas Estrechos**

5-PL32-003-B

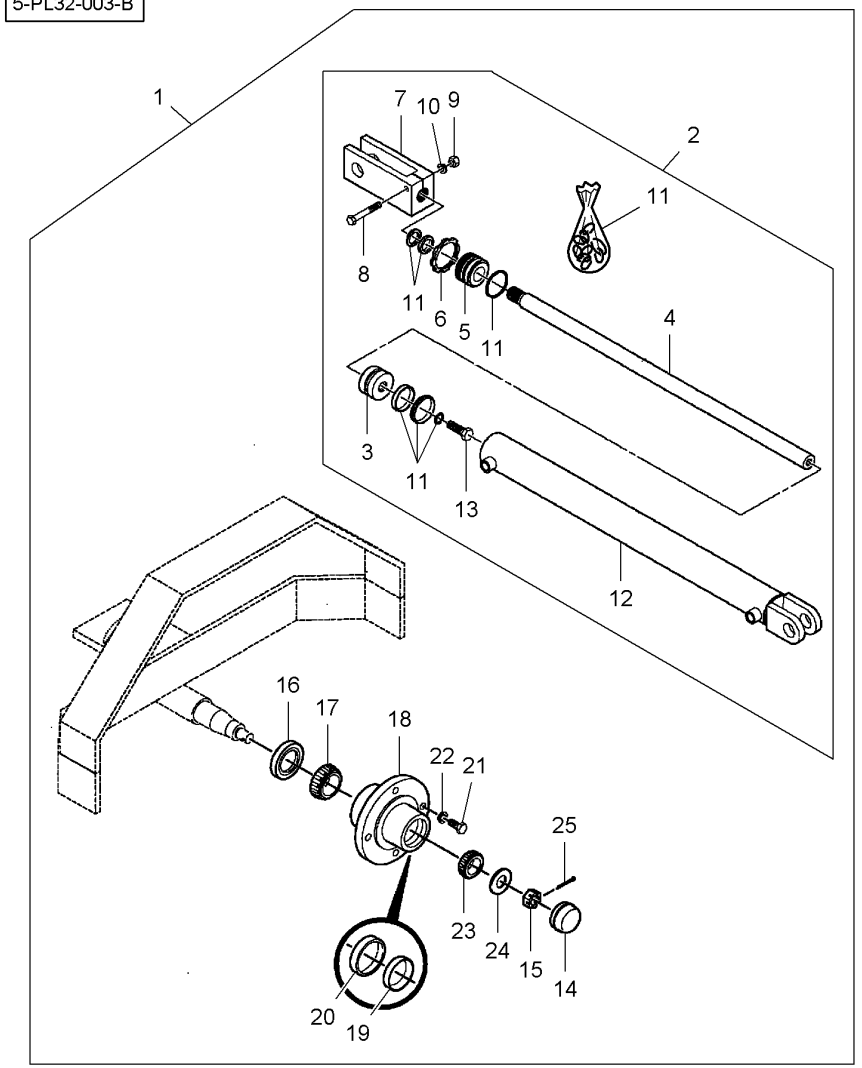


| | | | | | | |
|---|---|---|---|---|---|---|
| 1 | 6000492 | | 30-25 No 1 | **1** | KIT, ATTACHMENT | JEU ACCESSOIRES<br>KIT ACCESSORI | SATZ ANBAUTEILE<br>JUEGO ACCESORIO |
| 2 | 855104 | 1 | | **2** | RAM | VERIN<br>CILINDRO IDRAUL. | HYDR.ZYLINDER<br>ARIETE |
| 3 | N855829 | 2 | | **1** | PISTON | PISTON<br>PISTONE | KOLBEN<br>PISTON |
| 4 | N855834 | 2 | | **1** | ROD | TRINGLE<br>ASTA | STANGE<br>VARILLA |
| 5 | N855828 | 2 | | **1** | HEAD | TETE<br>TESTA | KOPF<br>CULATA |
| 6 | N855832 | 2 | | **1** | LOCKNUT | ECROU FREIN<br>AUTOBLOCCANTE | SICHERUNGSMUTTER<br>CONTRATUERCA |
| 7 | N857679 | 2 | | **1** | CLEVIS | CHAPE<br>GANCIO D'ATTACCO | GABELSTUECK<br>GANCHO SEGURI. |
| 8 | **354269X1** | 2 | 3/8"-16 X 2-1/2 | **1** | BOLT UNC | BOULON UNC<br>BULLONE UNC | MASCH.SCHRB.UNC<br>PERNO UNC |
| 9 | 355566X1 | 2 | 3/8"-16 | **1** | NUT UNC | ECROU UNC<br>DADO UNC | MUTTER UNC<br>TUERCA UNC |
| 10 | 353434X1 | 2 | 3/8" | **1** | LOCK WASHER | RONDELLE FREIN<br>RONDELLA ARRESTO | SICHERUNGSRING<br>ARANDELA SEGURID |
| 11* | **700723488** | 2 | | **1** | KIT, SEAL | JEU ETANCHEITE<br>KIT TENUTA | DICHTRINGSATZ<br>RETENES JUEGO |
| 12 | N855833 | 2 | | **1** | CYLINDER CASING | CORPS CYLINDRE<br>CORPO CILINDRO | ZYLINDERMANTEL<br>CUERPO CILINDRO |
| 13 | N855830 | 2 | | **1** | BOLT | BOULON<br>BULLONE | BOLZEN<br>BULON |
| 14* | **700721844** | 1 | | **2** | CAP | CHAPEAU<br>CAPUCHON | KAPPE<br>TAPA |
| 15* | 70917423 | 1 | 5/8"-18 | **2** | BOLT UNF | BOULON UNF<br>BULLONE UNF | MASCH.SCHRB.UNF<br>PERNO UNF |
| 16 | **744888** | 1 | | **2** | SEAL | JOINT ETANCHEITE<br>GIUNTO ROTONDO | DICHTRING<br>JUNTA REDONDA |
| 17 | **70341230** | 1 | | **2** | ANGUL.BALL BEAR. | ROULEMENT CONIQU<br>ANGUL.BALL BEAR. | SCHRAEGKUGELLAG.<br>ANGUL.BALL BEAR. |
| 18 | BR0229 | 1 | | **2** | HUB | MOYEU<br>MOZZO | NABE<br>CUBO |
| 19 | **70336914** | 18 | | **1** | BEARING CUP | CUVETTE ROULEMNT<br>COPPA CUSCINETTO | LAGERAUSSENRING<br>ANILLO COJINETE |
| 20 | **832190M1** | 18 | | **1** | BEARING CUP | CUVETTE ROULEMNT<br>COPPA CUSCINETTO | LAGERAUSSENRING<br>ANILLO COJINETE |
| 21 | 354393X1 | 1 | 1/2"-20 X 1 | **8** | BOLT UNF | BOULON UNF<br>BULLONE UNF | MASCH.SCHRB.UNF<br>PERNO UNF |
| 22* | Y705046 | 1 | 1/2" | **8** | LOCK WASHER | RONDELLE FREIN<br>RONDELLA ARRESTO | SICHERUNGSRING<br>ARANDELA SEGURID |
| 23 | **70336915** | 1 | | **2** | ANGUL.BALL BEAR. | ROULEMENT CONIQU<br>ANGUL.BALL BEAR. | SCHRAEGKUGELLAG.<br>ANGUL.BALL BEAR. |
| 24 | **BR0233** | 1 | | **2** | WASHER | RONDELLE<br>RONDELLA | SCHEIBE<br>ARANDELA |
| 25 | 62190 | 1 | 5/32" X 1-1/2 | **2** | PIN | GOUPILLE<br>COPPIGLIA | STIFT<br>PASADOR |

**Folding Row Marker**
**Traceur Rabattable**
**Klappspurreisser**
**Marcasolco Ribaltabile**
**Marcador Abatible**

# 30-35

**12 Row Narrow**
**12 Rangs Etroits**
**12 Schmal Reihes**
**12 Lineas Stretta**
**12 Lineas Estrecho**

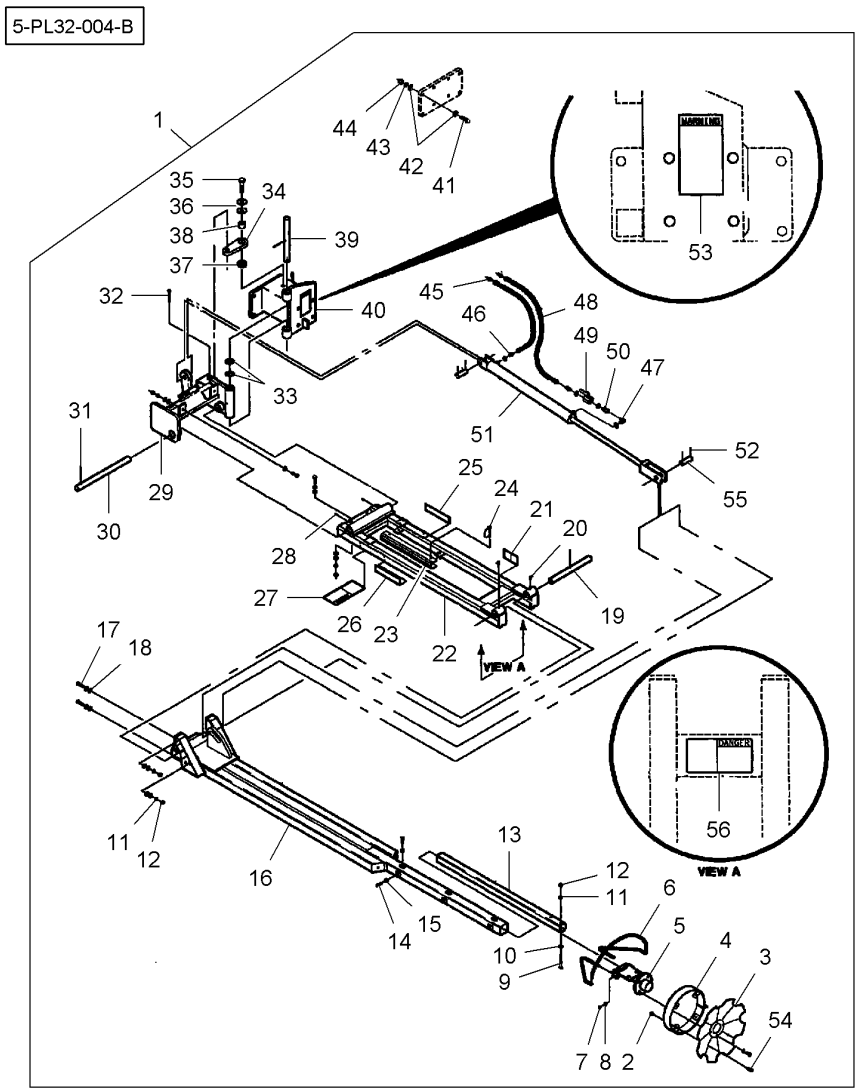


| | | | | | | |
|---|---|---|---|---|---|---|
| 1 | 6000611 | 30-40 No 1 | **1** | KIT, ATTACHMENT | JEU ACCESSOIRES<br>KIT ACCESSORI | SATZ ANBAUTEILE<br>JUEGO ACCESORIO |
| 2 | Y704163 | 1 5/16"-18 | **10** | LOCKNUT | ECROU FREIN<br>AUTOBLOCCANTE | SICHERUNGSMUTTER<br>CONTRATUERCA |
| 3 | BD5867 | 1 | **2** | DISC | DISQUE<br>DISCO | SCHEIBE<br>DISCO |
| 4 | BA5182 | 1 | **2** | RING | ANNEAU<br>ANELLO | RING.<br>ANILLO |
| 5 | 700157278 | 1 | **2** | SHIELD | TOLE<br>RIPARO | SCHILD<br>BLINDAJE |
| 6 | 700157281 | 1 | **2** | ROD | TRINGLE<br>ASTA | STANGE<br>VARILLA |
| 7 | 70923242 | 1 5/16"-18 X 5/8 | **4** | SCREW UNC | VIS UNC<br>VITE UNC | SCHRAUBE UNC<br>TORNILLO UNC |
| 8 | 70920161 | 1 5/16"-18 | **4** | NUT | ECROU<br>DADO | MUTTER<br>TUERCA |
| 9 | 70920990 | 1 1/2"-13 X 3-1/2 | **4** | BOLT UNC | BOULON UNC<br>BULLONE UNC | MASCH.SCHRB.UNC<br>PERNO UNC |
| 10 | Y705624 | 1 1/2" | **4** | WASHER | RONDELLE<br>RONDELLA | SCHEIBE<br>ARANDELA |
| 11* | Y705046 | 1 1/2" | **20** | LOCK WASHER | RONDELLE FREIN<br>RONDELLA ARRESTO | SICHERUNGSRING<br>ARANDELA SEGURID |
| 12* | 375098X1 | 1 1/2"-13 | **20** | NUT UNC | ECROU UNC<br>DADO UNC | MUTTER UNC<br>TUERCA UNC |
| 13 | BD5879 | 1 | **2** | TUBE | TUBE<br>TUBO. | ROHR<br>TUBO. |
| 14 | 70922695 | 1 1/2"-13 X 1-1/4 | **4** | SETSCREW | VIS DE BLOCAGE<br>INSIEME VITI | STELLSCHRAUBE<br>SET SCREW |
| 15* | 70913744 | 1 1/2"-13 | **4** | NUT UNC | ECROU UNC<br>DADO UNC | MUTTER UNC<br>TUERCA UNC |
| 16* | N858051 | 1 ◀ | **1** | MARKER | MARQUEUR<br>TACCA | MARKIERGS.PFEIL<br>MARCADOR |
| 16 | N858052 | 1 ▶ | **1** | MARKER | MARQUEUR<br>TACCA | MARKIERGS.PFEIL<br>MARCADOR |
| 17 | 70919089 | 1 1/2"-13 X 1-3/4 | **16** | BOLT UNC | BOULON UNC<br>BULLONE UNC | MASCH.SCHRB.UNC<br>PERNO UNC |
| 18 | 700717693 | 1 | **60** | WASHER | RONDELLE<br>RONDELLA | SCHEIBE<br>ARANDELA |
| 19 | BD5882 | 1 | **2** | SHAFT | ARBRE<br>ALBERO | WELLE<br>ARBOL |
| 20 | 70915019 | 1 | **4** | GREASE FITTING | GRAISSEUR<br>INGRASSATORE | DRUCKSCHMIERKOPF<br>ENGRASADOR |
| 21 | N858727 | 1 | **2** | DECAL | DECALCOMANIE<br>DECALCOMANIA | AUFKLEBER<br>CALCOMANIA |
| 22 | N858036 | 1 | **2** | MARKER | MARQUEUR<br>TACCA | MARKIERGS.PFEIL<br>MARCADOR |
| 23 | BD7173 | 1 | **2** | RAM | VERIN<br>CILINDRO IDRAUL. | HYDR.ZYLINDER<br>ARIETE |
| 24 | W245430B | 1 | **4** | CLIP | PATTE D'ATTACHE<br>FERMAGLIO | SCHELLE<br>CLIP |
| 25 | 700717402 | 1 [A] | **2** | REFLECTOR | CATADIOPTRE<br>CATADIOTTRO | RUECKSTRAHLER<br>LUZ REFRACTANTE |

**Folding Row Marker**
**Traceur Rabattable**
**Klappspurreisser**
**Marcasolco Ribaltabile**
**Marcador Abatible**

**30-35**

**12 Row Narrow**
**12 Rangs Etroits**
**12 Schmal Reihes**
**12 Lineas Stretta**
**12 Lineas Estrecho**

5-PL32-004-B

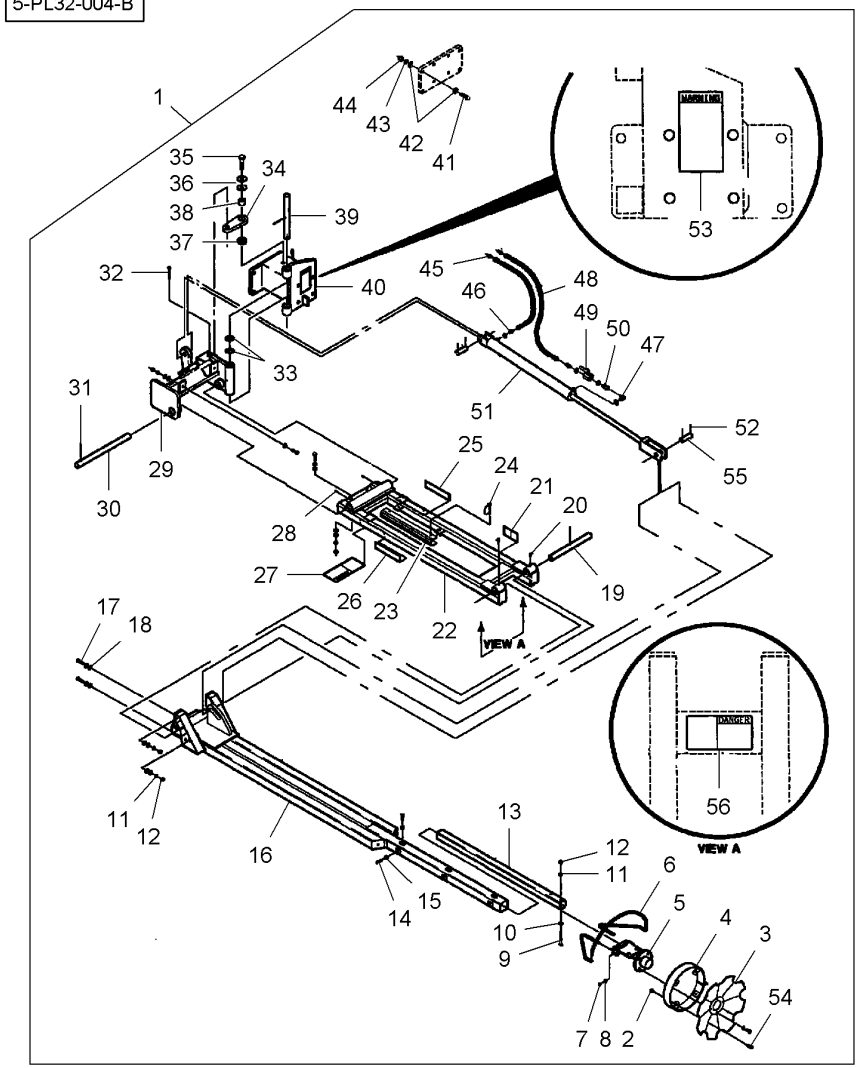


| | | | | | | |
|---|---|---|---|---|---|---|
| 26 | 700717403 | 1 [B] | **2** | REFLECTOR | CATADIOPTRE<br>CATADIOTTRO | RUECKSTRAHLER<br>LUZ REFRACTANTE |
| 27 | N858711 | 1 | **2** | DECAL | DECALCOMANIE<br>DECALCOMANIA | AUFKLEBER<br>CALCOMANIA |
| 28 | 70914687 | 1 | **4** | GREASE FITTING | GRAISSEUR<br>INGRASSATORE | DRUCKSCHMIERKOPF<br>ENGRASADOR |
| 29 | 700160091 | 1 ◀ | **1** | BASE | SEMELLE<br>BASE | FUSSPLATTE<br>BASE |
| 29 | 700160090 | 1 ▶ | **1** | BASE | SEMELLE<br>BASE | FUSSPLATTE<br>BASE |
| 30 | BD5881 | 1 | **2** | SHAFT | ARBRE<br>ALBERO | WELLE<br>ARBOL |
| 31 | 70916767 | 1 3/8" X 2 | **6** | PIN | GOUPILLE<br>COPPIGLIA | STIFT<br>PASADOR |
| 32 | 70923141 | 1 5/16"-18 X2-3/4 | **2** | CAPSCREW | VIS BOUCHON<br>TAPPO A VITE | HUTSCHRAUBE<br>TORNILLO TAPON |
| 33 | K4795 | 1 | **4** | WASHER | RONDELLE<br>RONDELLA | SCHEIBE<br>ARANDELA |
| 34 | 700158310 | 1 | **2** | LINK | MAILLON<br>MAGLIA | GLIED<br>ESLABON |
| 35 | 354718X1 | 1 3/4"-10 X 2-3/4 | **2** | BOLT UNC | BOULON UNC<br>BULLONE UNC | MASCH.SCHRB.UNC<br>PERNO UNC |
| 36 | 700711166 | 1 3/4" | **4** | WASHER | RONDELLE<br>RONDELLA | SCHEIBE<br>ARANDELA |
| 37 | 700703923 | 1 3/4"-10 | **2** | LOCKNUT | ECROU FREIN<br>AUTOBLOCCANTE | SICHERUNGSMUTTER<br>CONTRATUERCA |
| 38 | 700158309 | 1 | **2** | BUSH | BAGUE<br>BOCCOLA | RING<br>CASQUILLO |
| 39 | BD5884 | 1 | **2** | SHAFT | ARBRE<br>ALBERO | WELLE<br>ARBOL |
| 40 | 700158315 | 1 ◀ | **1** | BRACKET | SUPPORT FIXATION<br>STAFFETTA | HALTEARM<br>SOPORTE |
| 40 | 700158316 | 1 ▶ | **1** | BRACKET | SUPPORT FIXATION<br>STAFFETTA | HALTEARM<br>SOPORTE |
| 41 | 70922664 | 1 5/8"-11 X 2 | **8** | BOLT UNC | BOULON UNC<br>BULLONE UNC | MASCH.SCHRB.UNC<br>PERNO UNC |
| 42 | 11538 | 1 5/8" | **16** | WASHER | RONDELLE<br>RONDELLA | SCHEIBE<br>ARANDELA |
| 43 | 353433X1 | 1 5/8" | **8** | LOCK WASHER | RONDELLE FREIN<br>RONDELLA ARRESTO | SICHERUNGSRING<br>ARANDELA SEGURID |
| 44 | 70926937 | 1 5/8"-11 | **8** | LOCKNUT | ECROU FREIN<br>AUTOBLOCCANTE | SICHERUNGSMUTTER<br>CONTRATUERCA |
| 45 | 846477 | 1 | **4** | UNION | RACCORD<br>RACCORDO | VERSCHRAUBUNG<br>RACOR |
| 46* | 846634 | 1 | **4** | UNION | RACCORD<br>RACCORDO | VERSCHRAUBUNG<br>RACOR |
| 46* | 831452M1 | 46 | **1** | O RING | JOINT TORIQUE<br>GIUNTO DI TENUTA | O-RING<br>JUNTA TOROIDAL |
| 47 | 357197X91 | 1 | **2** | ELBOW NIPPLE | RACCORD COUDE<br>NIPPLO GOMITO | WINKELSTUTZEN<br>CODO DE UNION |
| 47* | 831452M1 | 58 | **1** | O RING | JOINT TORIQUE<br>GIUNTO DI TENUTA | O-RING<br>JUNTA TOROIDAL |

**Folding Row Marker**
**Traceur Rabattable**
**Klappspurreisser**
**Marcasolco Ribaltabile**
**Marcador Abatible**

**30-35**

**12 Row Narrow**
**12 Rangs Etroits**
**12 Schmal Reihes**
**12 Lineas Stretta**
**12 Lineas Estrecho**

5-PL32-004-B

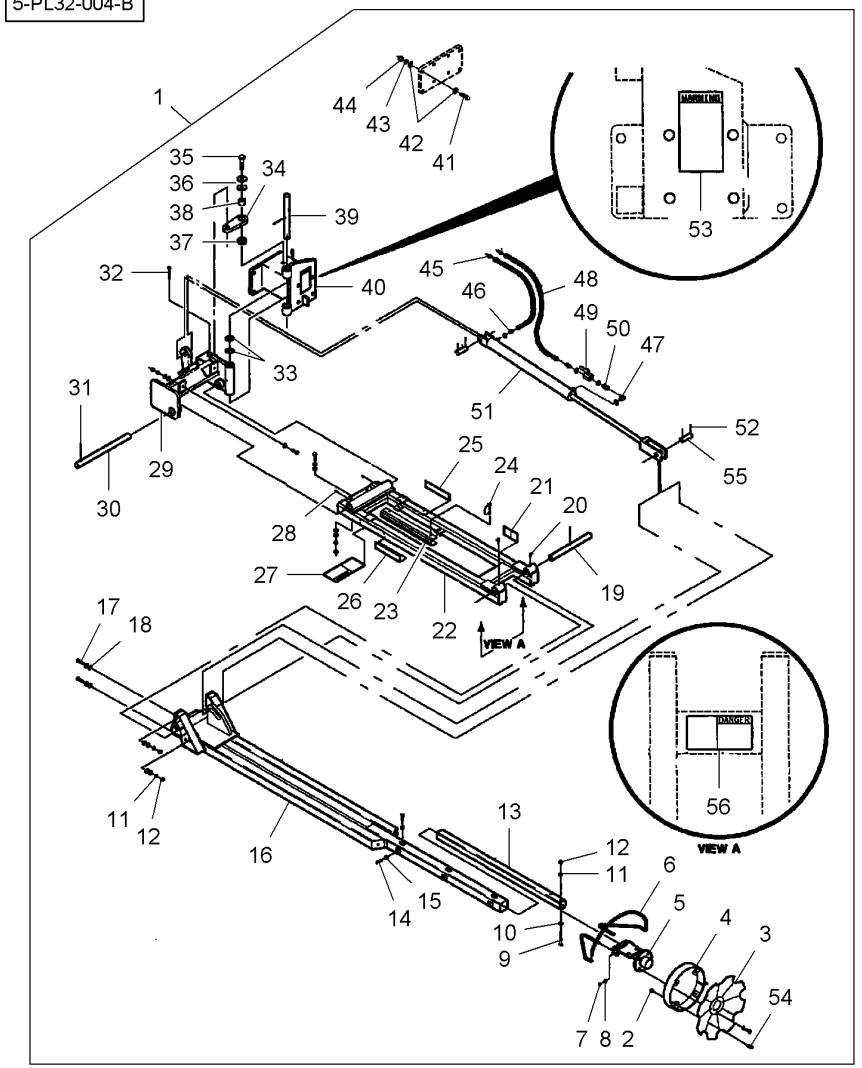


| | | | | | | |
|---|---|---|---|---|---|---|
| 48 | 854275 | 1 ◀▶ 17"-1/2 | **2** | HOSE | DURITE<br>TUBO FLESSIBILE | SCHLAUCH<br>TUBO DE GOMA |
| 49 | 854851 | 1 | **2** | VALVE | SOUPAPE<br>VALVOLA | VENTIL<br>VALVULA |
| 50 | 700709216 | 1 | **2** | ADAPTOR | ADAPTATEUR<br>ADATTATORE | REDUZIERNIPPEL<br>ADAPTADOR |
| 50* | 831452M1 | 50 | **1** | O RING | JOINT TORIQUE<br>GIUNTO DI TENUTA | O-RING<br>JUNTA TOROIDAL |
| 51 | 855104 | 1 👁 30-30 No 2 | **2** | RAM | VERIN<br>CILINDRO IDRAUL. | HYDR.ZYLINDER<br>ARIETE |
| 52 | 932036 | 1 3/16" X 1-1/2 | **8** | SPLIT PIN | GOUPILLE FENDUE<br>COPIGLIA | SPALTBOLZEN<br>PASADOR HENDIDO |
| 53 | N857033 | 1 | **2** | DECAL | DECALCOMANIE<br>DECALCOMANIA | AUFKLEBER<br>CALCOMANIA |
| 54* | 70921333 | 1 5/16"-18 X 1 | **8** | BOLT UNC | BOULON UNC<br>BULLONE UNC | MASCH.SCHRB.UNC<br>PERNO UNC |
| 55 | N15148 | 1 1" X 3 | **2** | CLEVIS PIN | AXE<br>PERNO D'ATTACCO | SPLINTBOLZEN<br>BULON CILINDRICO |
| 56 | N857031 | 1 | **2** | DECAL | DECALCOMANIE<br>DECALCOMANIA | AUFKLEBER<br>CALCOMANIA |

[A] RED
ROUGE
ROT
ROSSO
ROJO

[B] YELLOW
JAUNE
GELB
GIALLO
AMARILLO

**Folding Row Marker**
**Traceur Rabattable**
**Klappspurreisser**
**Marcasolco Ribaltabile**
**Marcador Abatible**

**30-40**

**12 Row Narrow**
**12 Rangs Etroits**
**12 Schmal Reihes**
**12 Lineas Stretta**
**12 Lineas Estrecho**

5-PL32-005-B

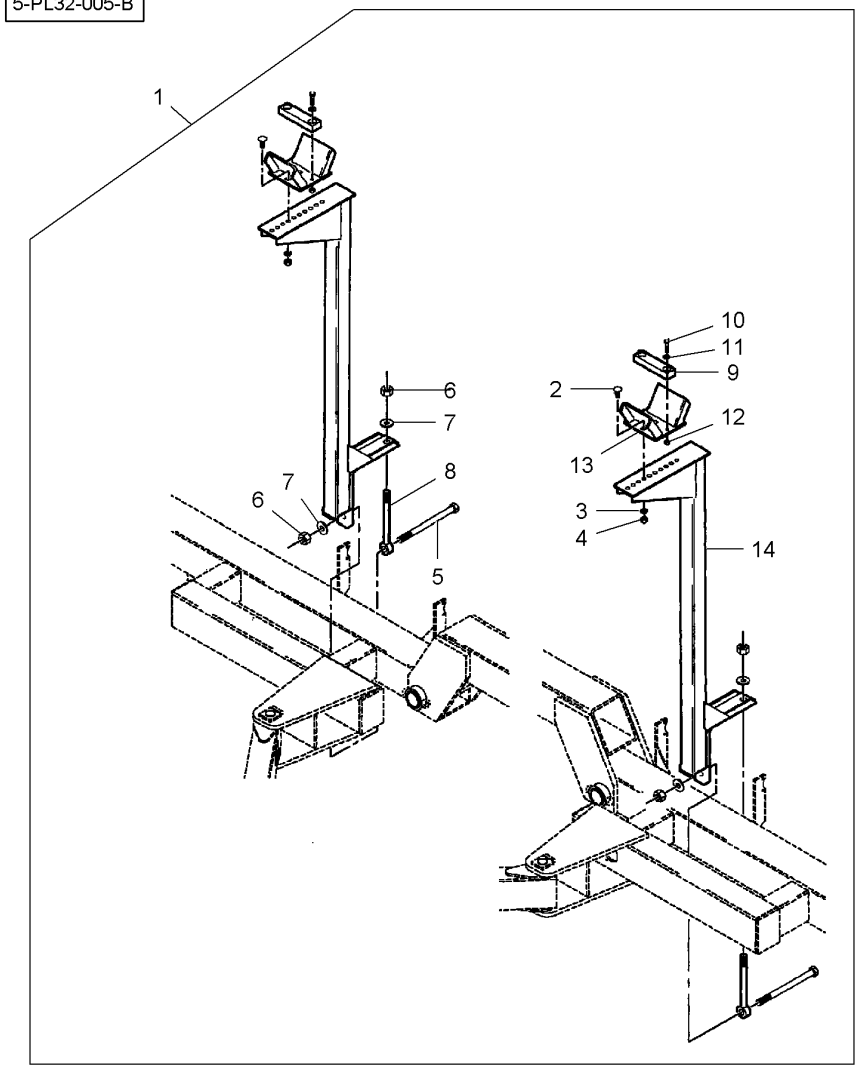


| | | | | | | |
|---|---|---|---|---|---|---|
| 1 | 6000611 | 30-35 No 1 | **1** | KIT, ATTACHMENT | JEU ACCESSOIRES<br>KIT ACCESSORI | SATZ ANBAUTEILE<br>JUEGO ACCESORIO |
| 2* | 68619 | 1 1/2"-13 X 1-1/4 | **4** | BOLT UNC | BOULON UNC<br>BULLONE UNC | MASCH.SCHRB.UNC<br>PERNO UNC |
| 3* | Y705046 | 1 1/2" | **4** | LOCK WASHER | RONDELLE FREIN<br>RONDELLA ARRESTO | SICHERUNGSRING<br>ARANDELA SEGURID |
| 4 | 375098X1 | 1 1/2"-13 | **4** | NUT UNC | ECROU UNC<br>DADO UNC | MUTTER UNC<br>TUERCA UNC |
| 5 | W908188-4 | 1 3/4"-10 X 9-1/2 | **2** | SCREW | VIS<br>VITE | SCHRAUBE<br>TORNILLO |
| 6 | Y704718 | 1 3/4"-10 | **4** | LOCKNUT | ECROU FREIN<br>AUTOBLOCCANTE | SICHERUNGSMUTTER<br>CONTRATUERCA |
| 7 | 700718035 | 1 | **4** | WASHER | RONDELLE<br>RONDELLA | SCHEIBE<br>ARANDELA |
| 8 | BD0830 | 1 3/4"-10 X 9 | **2** | EYE BOLT | BOULON A OEIL<br>BULLONE A OCCHIO | AUGENSCHRAUBE<br>ARMELLA |
| 9 | BD5878 | 1 | **2** | STOP | BUTEE<br>STOP | ANSCHLAG<br>PARO |
| 10 | 70921969 | 1 3/8"-16 X 1-1/2 | **4** | BOLT UNC | BOULON UNC<br>BULLONE UNC | MASCH.SCHRB.UNC<br>PERNO UNC |
| 11 | 70913544 | 1 3/8" | **4** | WASHER | RONDELLE<br>RONDELLA | SCHEIBE<br>ARANDELA |
| 12 | 7704141 | 1 3/8"-16 | **4** | LOCKNUT | ECROU FREIN<br>AUTOBLOCCANTE | SICHERUNGSMUTTER<br>CONTRATUERCA |
| 13 | N858075 | 1 | **2** | REST | APPUI<br>APPOGGIO* | LEHNE<br>APOYO |
| 14 | N858069 | 1 | **2** | REST | APPUI<br>APPOGGIO* | LEHNE<br>APOYO |

**Folding Row Marker**
**Traceur Rabattable**
**Klappspurreisser**
**Marcasolco Ribaltabile**
**Marcador Abatible**

**30-45** ◀

5-PL32-007-A

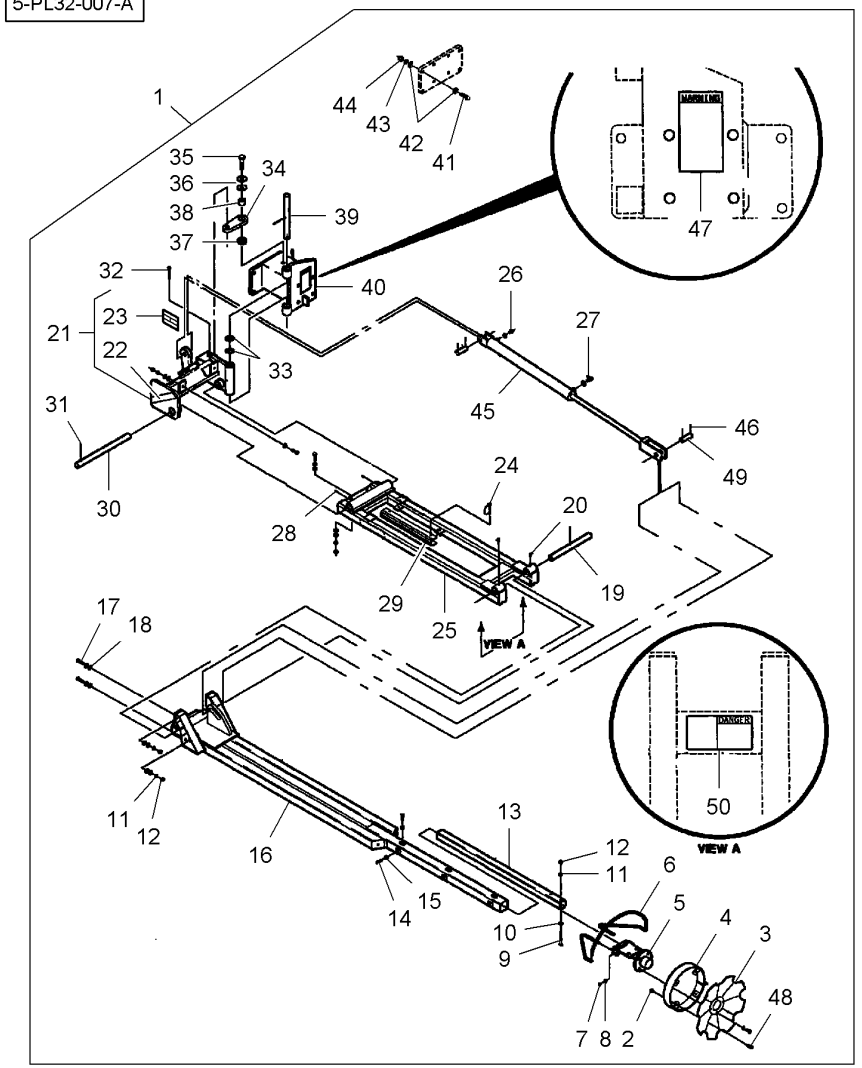


| | | | | | |
|---|---|---|---|---|---|
| 1* | 6000610 | ◀ | 1 | KIT, ATTACHMENT | JEU ACCESSOIRES<br>KIT ACCESSORI |
| 2* | Y704163 | 1 5/16"-18 | 5 | LOCKNUT | ECROU FREIN<br>AUTOBLOCCANTE |
| 3* | BD5867 | 1 | 1 | DISC | DISQUE<br>DISCO |
| 4* | BA5182 | 1 | 1 | RING | ANNEAU<br>ANELLO |
| 5* | 700157278 | 1 | 1 | SHIELD | TOLE<br>RIPARO |
| 6* | 700157281 | 1 | 1 | ROD | TRINGLE<br>ASTA |
| 7* | 70923242 | 1 5/16"-18 X 5/8 | 2 | SCREW UNC | VIS UNC<br>VITE UNC |
| 8* | 70920161 | 1 5/16"-18 | 2 | NUT | ECROU<br>DADO |
| 9* | 70920990 | 1 1/2"-13 X 3-1/2 | 2 | BOLT UNC | BOULON UNC<br>BULLONE UNC |
| 10* | Y705624 | 1 1/2" | 2 | WASHER | RONDELLE<br>RONDELLA |
| 11* | Y705046 | 1 1/2" | 10 | LOCK WASHER | RONDELLE FREIN<br>RONDELLA ARRESTO |
| 12* | 704031 | 1 1/2"-13 | 10 | NUT UNC | ECROU UNC<br>DADO UNC |
| 13* | BD5879 | 1 | 1 | TUBE | TUBE<br>TUBO. |
| 14* | 70922695 | 1 1/2"-13 X 1-1/4 | 2 | SETSCREW | VIS DE BLOCAGE<br>INSIEME VITI |
| 15* | 70913744 | 1 1/2"-13 | 2 | NUT UNC | ECROU UNC<br>DADO UNC |
| 16* | N858051 | 1 ◀ | 1 | MARKER | MARQUEUR<br>TACCA |
| 17* | 70919089 | 1 1/2"-13 X 1-3/4 | 8 | BOLT UNC | BOULON UNC<br>BULLONE UNC |
| 18* | 700717693 | 1 | 30 | WASHER | RONDELLE<br>RONDELLA |
| 19* | BD5882 | 1 | 1 | SHAFT | ARBRE<br>ALBERO |
| 20* | 70915019 | 1 | 2 | GREASE FITTING | GRAISSEUR<br>INGRASSATORE |
| 21 | 700160091 | 1 ◀ | 1 | BASE | SEMELLE<br>BASE |
| 22* | 700717403 | 21 [B] | 1 | REFLECTOR | CATADIOPTRE<br>CATADIOTTRO |
| 23* | B7100-01 | 21 | 1 | DECAL | DECALCOMANIE<br>DECALCOMANIA |
| 24* | W245430B | 1 | 2 | CLIP | PATTE D'ATTACHE<br>FERMAGLIO |
| 25* | N858036 | 1 | 1 | MARKER | MARQUEUR<br>TACCA |
| 26* | 846634 | 1 | 1 | UNION | RACCORD<br>RACCORDO |

| | | | | | |
|---|---|---|---|---|---|
| 1* | 6000610 | ◀ | 1 | KIT, ATTACHMENT | SATZ ANBAUTEILE<br>JUEGO ACCESORIO |
| 2* | Y704163 | 1 5/16"-18 | 5 | LOCKNUT | SICHERUNGSMUTTER<br>CONTRATUERCA |
| 3* | BD5867 | 1 | 1 | DISC | SCHEIBE<br>DISCO |
| 4* | BA5182 | 1 | 1 | RING | RING.<br>ANILLO |
| 5* | 700157278 | 1 | 1 | SHIELD | SCHILD<br>BLINDAJE |
| 6* | 700157281 | 1 | 1 | ROD | STANGE<br>VARILLA |
| 7* | 70923242 | 1 5/16"-18 X 5/8 | 2 | SCREW UNC | SCHRAUBE UNC<br>TORNILLO UNC |
| 8* | 70920161 | 1 5/16"-18 | 2 | NUT | MUTTER<br>TUERCA |
| 9* | 70920990 | 1 1/2"-13 X 3-1/2 | 2 | BOLT UNC | MASCH.SCHRB.UNC<br>PERNO UNC |
| 10* | Y705624 | 1 1/2" | 2 | WASHER | SCHEIBE<br>ARANDELA |
| 11* | Y705046 | 1 1/2" | 10 | LOCK WASHER | SICHERUNGSRING<br>ARANDELA SEGURID |
| 12* | 704031 | 1 1/2"-13 | 10 | NUT UNC | MUTTER UNC<br>TUERCA UNC |
| 13* | BD5879 | 1 | 1 | TUBE | ROHR<br>TUBO. |
| 14* | 70922695 | 1 1/2"-13 X 1-1/4 | 2 | SETSCREW | STELLSCHRAUBE<br>SET SCREW |
| 15* | 70913744 | 1 1/2"-13 | 2 | NUT UNC | MUTTER UNC<br>TUERCA UNC |
| 16* | N858051 | 1 ◀ | 1 | MARKER | MARKIERGS.PFEIL<br>MARCADOR |
| 17* | 70919089 | 1 1/2"-13 X 1-3/4 | 8 | BOLT UNC | MASCH.SCHRB.UNC<br>PERNO UNC |
| 18* | 700717693 | 1 | 30 | WASHER | SCHEIBE<br>ARANDELA |
| 19* | BD5882 | 1 | 1 | SHAFT | WELLE<br>ARBOL |
| 20* | 70915019 | 1 | 2 | GREASE FITTING | DRUCKSCHMIERKOPF<br>ENGRASADOR |
| 21 | 700160091 | 1 ◀ | 1 | BASE | FUSSPLATTE<br>BASE |
| 22* | 700717403 | 21 [B] | 1 | REFLECTOR | RUECKSTRAHLER<br>LUZ REFRACTANTE |
| 23* | B7100-01 | 21 | 1 | DECAL | AUFKLEBER<br>CALCOMANIA |
| 24* | W245430B | 1 | 2 | CLIP | SCHELLE<br>CLIP |
| 25* | N858036 | 1 | 1 | MARKER | MARKIERGS.PFEIL<br>MARCADOR |
| 26* | 846634 | 1 | 1 | UNION | VERSCHRAUBUNG<br>RACOR |

**Folding Row Marker**
**Traceur Rabattable**
**Klappspurreisser**
**Marcasolco Ribaltabile**
**Marcador Abatible**

**30-45** ◀

5-PL32-007-A

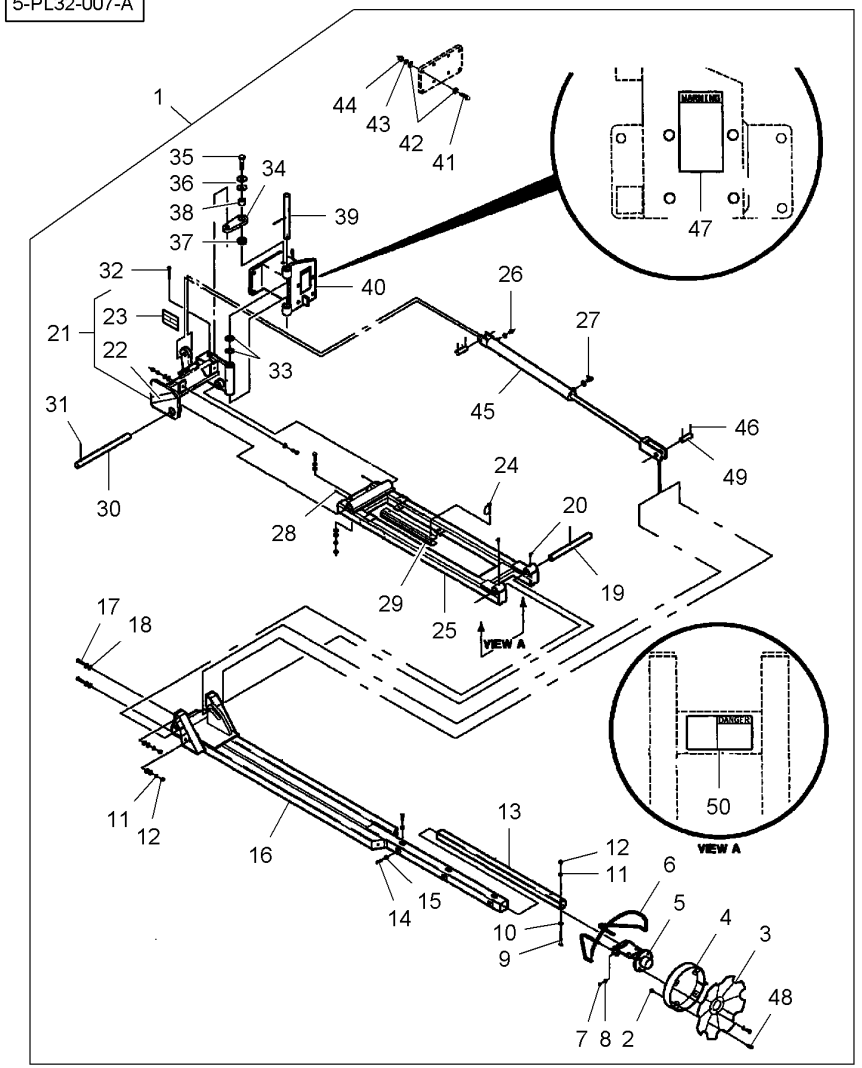


| | | | | | | |
|---|---|---|---|---|---|---|
| 26* | **738468** | 26 | | **1** | O RING | JOINT TORIQUE<br>GIUNTO DI TENUTA<br>O-RING<br>JUNTA TOROIDAL |
| 27* | 70922523 | 1 | | **1** | ELBOW NIPPLE | RACCORD COUDE<br>NIPPLO GOMITO<br>WINKELSTUTZEN<br>CODO DE UNION |
| 27* | **738468** | 27 | | **1** | O RING | JOINT TORIQUE<br>GIUNTO DI TENUTA<br>O-RING<br>JUNTA TOROIDAL |
| 28* | 70914687 | 1 | | **2** | GREASE FITTING | GRAISSEUR<br>INGRASSATORE<br>DRUCKSCHMIERKOPF<br>ENGRASADOR |
| 29* | BD7173 | 1 | | **1** | RAM | VERIN<br>CILINDRO IDRAUL.<br>HYDR.ZYLINDER<br>ARIETE |
| 30* | BD5881 | 1 | | **1** | SHAFT | ARBRE<br>ALBERO<br>WELLE<br>ARBOL |
| 31* | 70916767 | 1 | 3/8" X 2 | **3** | PIN | GOUPILLE<br>COPPIGLIA<br>STIFT<br>PASADOR |
| 32* | 70923141 | 1 | 5/16"-18 X2-3/4 | **1** | CAPSCREW | VIS BOUCHON<br>TAPPO A VITE<br>HUTSCHRAUBE<br>TORNILLO TAPON |
| 33* | K4795 | 1 | | **2** | WASHER | RONDELLE<br>RONDELLA<br>SCHEIBE<br>ARANDELA |
| 34* | 700158310 | 1 | | **1** | LINK | MAILLON<br>MAGLIA<br>GLIED<br>ESLABON |
| 35* | 70924739 | 1 | 3/4"-10 X 2-3/4 | **1** | BOLT | BOULON<br>BULLONE<br>BOLZEN<br>BULON |
| 36* | 700711166 | 1 | 3/4" | **2** | WASHER | RONDELLE<br>RONDELLA<br>SCHEIBE<br>ARANDELA |
| 37* | 700703923 | 1 | 3/4"-10 | **1** | LOCKNUT | ECROU FREIN<br>AUTOBLOCCANTE<br>SICHERUNGSMUTTER<br>CONTRATUERCA |
| 38* | 700158309 | 1 | | **1** | BUSH | BAGUE<br>BOCCOLA<br>RING<br>CASQUILLO |
| 39* | BD5884 | 1 | | **1** | SHAFT | ARBRE<br>ALBERO<br>WELLE<br>ARBOL |
| 40 | 700158315 | 1 | ◀ | **1** | BRACKET | SUPPORT FIXATION<br>STAFFETTA<br>HALTEARM<br>SOPORTE |
| 41* | 70922664 | 1 | 5/8"-11 X 2 | **4** | BOLT UNC | BOULON UNC<br>BULLONE UNC<br>MASCH.SCHRB.UNC<br>PERNO UNC |
| 42* | 11538 | 1 | 5/8" | **8** | WASHER | RONDELLE<br>RONDELLA<br>SCHEIBE<br>ARANDELA |
| 43* | 70917373 | 1 | 5/8" | **4** | LOCK WASHER | RONDELLE FREIN<br>RONDELLA ARRESTO<br>SICHERUNGSRING<br>ARANDELA SEGURID |
| 44* | 70926937 | 1 | 5/8"-11 | **4** | LOCKNUT | ECROU FREIN<br>AUTOBLOCCANTE<br>SICHERUNGSMUTTER<br>CONTRATUERCA |
| 45* | 855104 | 1 | 👁 30-30 No 2 | **1** | RAM | VERIN<br>CILINDRO IDRAUL.<br>HYDR.ZYLINDER<br>ARIETE |
| 46* | 932036 | 1 | 3/16" X 1-1/2 | **4** | SPLIT PIN | GOUPILLE FENDUE<br>COPIGLIA<br>SPALTBOLZEN<br>PASADOR HENDIDO |
| 47* | N857033 | 1 | | **1** | DECAL | DECALCOMANIE<br>DECALCOMANIA<br>AUFKLEBER<br>CALCOMANIA |
| 48* | 70921333 | 1 | 5/16"-18 X 1 | **4** | BOLT UNC | BOULON UNC<br>BULLONE UNC<br>MASCH.SCHRB.UNC<br>PERNO UNC |
| 49* | N15148 | 1 | 1" X 3 | **1** | CLEVIS PIN | AXE<br>PERNO D'ATTACCO<br>SPLINTBOLZEN<br>BULON CILINDRICO |
| 50* | N857031 | 1 | | **1** | DECAL | DECALCOMANIE<br>DECALCOMANIA<br>AUFKLEBER<br>CALCOMANIA |

**Folding Row Marker**
**Traceur Rabattable**
**Klappspurreisser**
**Marcasolco Ribaltabile**
**Marcador Abatible**

**30-45**

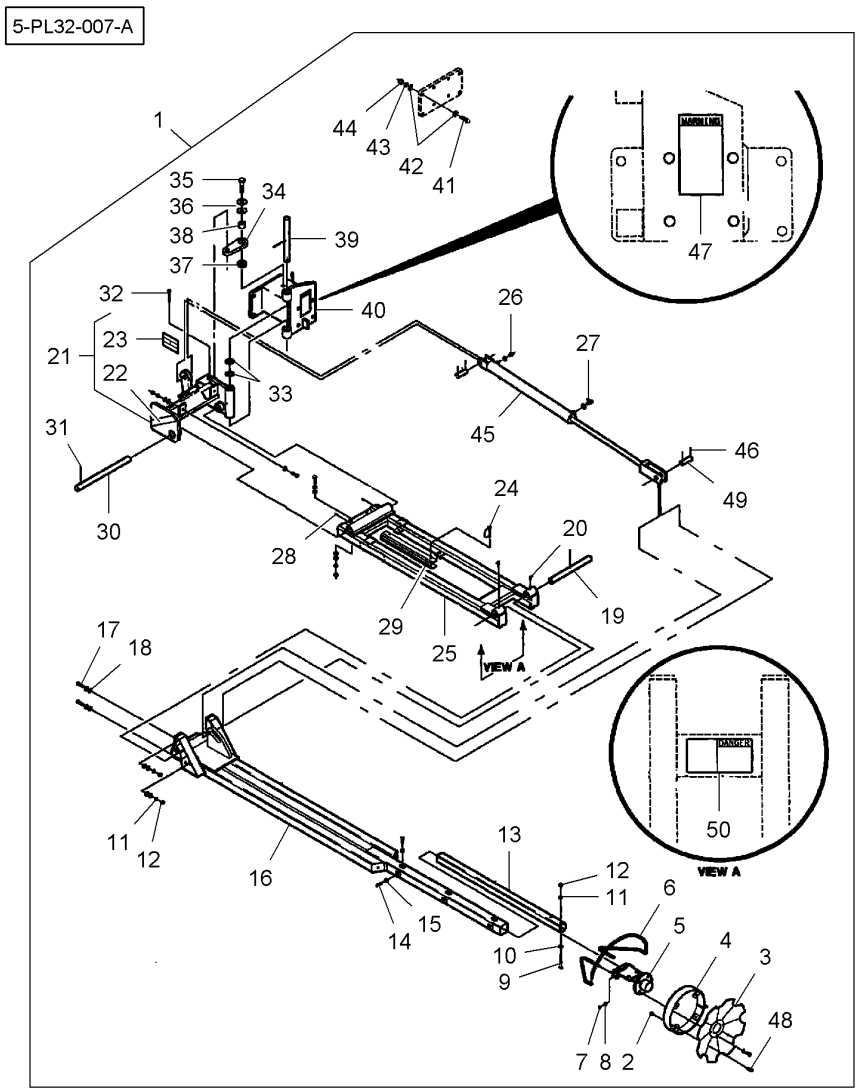


[B] YELLOW
JAUNE
GELB
GIALLO
AMARILLO

| Row Marker | Notched Disc | 30-50 |
|---|---|---|
| Traceur | Disque Crénelé | |
| Spurreisser | Gezackte Scheibe | |
| Marcasolco | Disco Dentellato | |
| Marcador | Disco Escotado | |

5-PM06-001-A

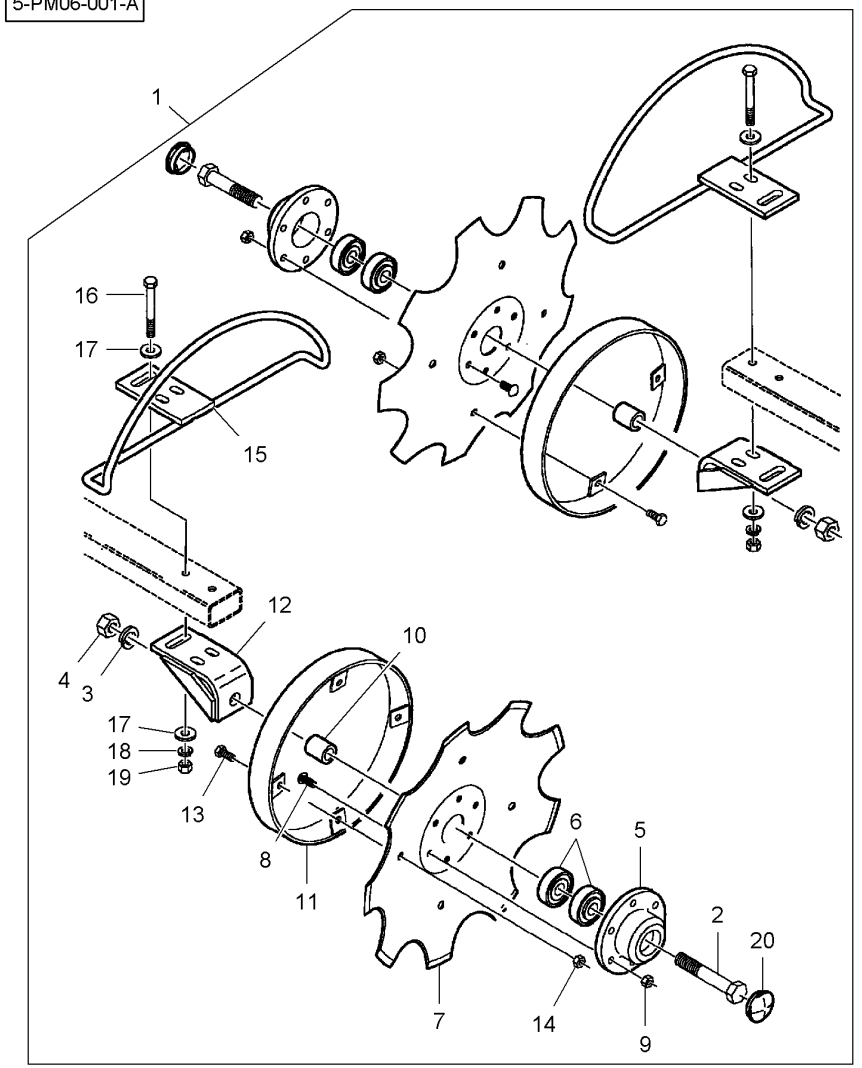


| | | | | | | |
|---|---|---|---|---|---|---|
| 1* | 6100094 | | 1 | KIT, ATTACHMENT | JEU ACCESSOIRES<br>KIT ACCESSORI | SATZ ANBAUTEILE<br>JUEGO ACCESORIO |
| 2* | 703355 | 1 5/8"-11 X 3-3/4 | 2 | BOLT UNC | BOULON UNC<br>BULLONE UNC | MASCH.SCHRB.UNC<br>PERNO UNC |
| 3* | 705061 | 1 5/8" | 2 | LOCK WASHER | RONDELLE FREIN<br>RONDELLA ARRESTO | SICHERUNGSRING<br>ARANDELA SEGURID |
| 4* | 704130 | 1 5/8"-11 | 2 | NUT UNC | ECROU UNC<br>DADO UNC | MUTTER UNC<br>TUERCA UNC |
| 5* | **W248424B** | 1 | 2 | HUB | MOYEU<br>MOZZO | NABE<br>CUBO |
| 6* | **W247167B** | 1 | 4 | BEARING ASSY | ROULEMENT<br>CUSCINETTO COMPL | RADIALLAGER<br>RODAMIENTO RAD |
| 7* | 853999 | 1 | 2 | BLADE | LAME<br>LAMA | KLINGE<br>HOJA CORTANTE |
| 8* | 70936460 | 1 5/16"-18 X 3/4 | 12 | SCREW | VIS<br>VITE | SCHRAUBE<br>TORNILLO |
| 9* | Y704015 | 1 5/16"-18 | 12 | NUT UNC | ECROU UNC<br>DADO UNC | MUTTER UNC<br>TUERCA UNC |
| 10* | 01680PM | 1 | 2 | SPACER | ENTRETOISE<br>DISTANZIALE | ABSTANDSTUECK<br>DISCO ESPACIADOR |
| 11* | 854145 | 1 | 2 | RING | ANNEAU<br>ANELLO | RING.<br>ANILLO |
| 12* | 851610 | 1 | 2 | BRACKET | SUPPORT FIXATION<br>STAFFETTA | HALTEARM<br>SOPORTE |
| 13* | 7703499 | 1 5/16"-18 X 3/4 | 8 | BOLT UNC | BOULON UNC<br>BULLONE UNC | MASCH.SCHRB.UNC<br>PERNO UNC |
| 14* | 704163 | 1 5/16"-18 | 8 | LOCKNUT | ECROU FREIN<br>AUTOBLOCCANTE | SICHERUNGSMUTTER<br>CONTRATUERCA |
| 15* | 851271 | 1 | 2 | GUARD | GARDE<br>PROTEZIONE | SCHUTZVORR<br>DEFENSA |
| 16* | 7703515 | 1 3/8"-16 X 3 | 4 | BOLT UNC | BOULON UNC<br>BULLONE UNC | MASCH.SCHRB.UNC<br>PERNO UNC |
| 17* | 700717523 | 1 | 8 | WASHER | RONDELLE<br>RONDELLA | SCHEIBE<br>ARANDELA |
| 18* | 705038 | 1 3/8" | 4 | LOCK WASHER | RONDELLE FREIN<br>RONDELLA ARRESTO | SICHERUNGSRING<br>ARANDELA SEGURID |
| 19* | 704023 | 1 3/8"-16 | 4 | NUT UNC | ECROU UNC<br>DADO UNC | MUTTER UNC<br>TUERCA UNC |
| 20* | **W247165B** | 1 | 2 | CAP | CHAPEAU<br>CAPUCHON | KAPPE<br>TAPA |

| Rigid Row Marker | Disc | 30-55 |
|---|---|---|
| Traceur Rigide | Disque | |
| Starrer Spurreisser | Scheibe | |
| Marcasolco Rigido | Disco | |
| Marcador Rígido | Disco | |

5-PM04-001-A

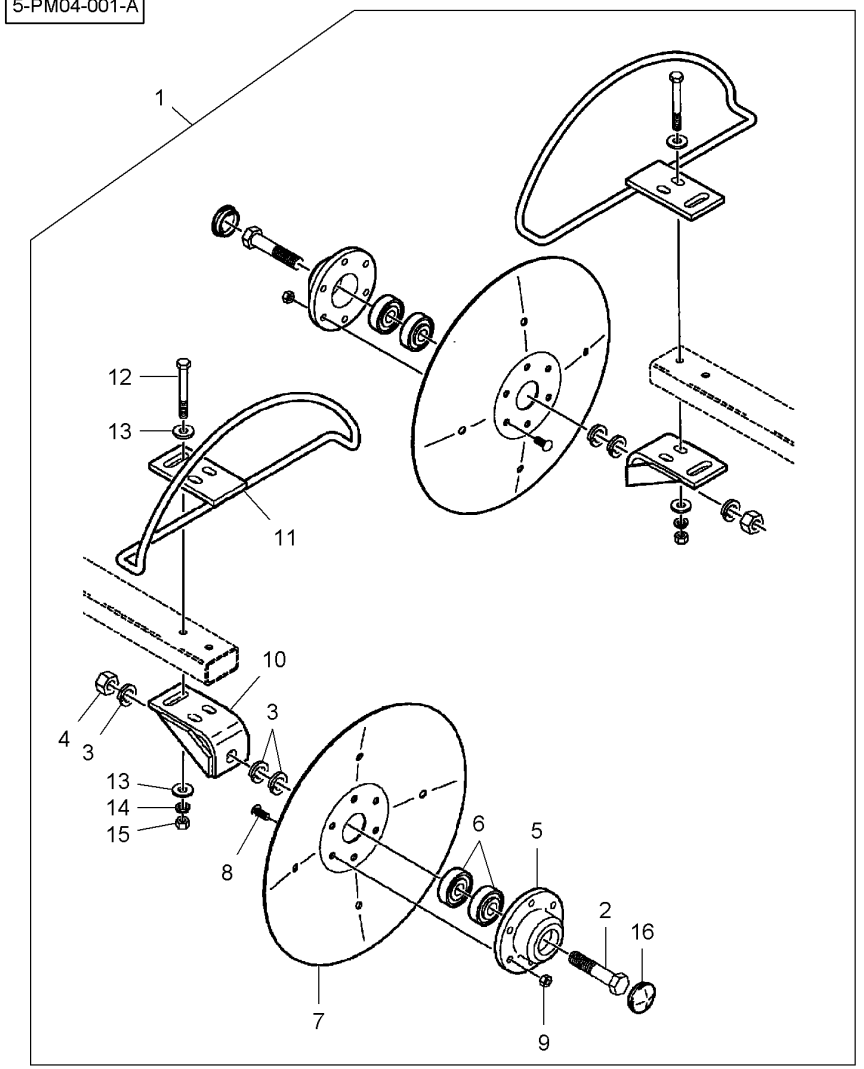


| | | | | | | |
|---|---|---|---|---|---|---|
| 1* | 9010063 | | 1 | KIT, ATTACHMENT | JEU ACCESSOIRES<br>KIT ACCESSORI | SATZ ANBAUTEILE<br>JUEGO ACCESORIO |
| 2* | 7701683 | 1 5/8"-11 X 3 | 2 | BOLT UNC | BOULON UNC<br>BULLONE UNC | MASCH.SCHRB.UNC<br>PERNO UNC |
| 3* | 705061 | 1 5/8" | 6 | LOCK WASHER | RONDELLE FREIN<br>RONDELLA ARRESTO | SICHERUNGSRING<br>ARANDELA SEGURID |
| 4* | 704130 | 1 5/8"-11 | 2 | NUT UNC | ECROU UNC<br>DADO UNC | MUTTER UNC<br>TUERCA UNC |
| 5* | **W248424B** | 1 | 2 | HUB | MOYEU<br>MOZZO | NABE<br>CUBO |
| 6* | **W247167B** | 1 | 4 | BEARING ASSY | ROULEMENT<br>CUSCINETTO COMPL | RADIALLAGER<br>RODAMIENTO RAD |
| 7* | **W248425B** | 1 | 2 | BLADE | LAME<br>LAMA | KLINGE<br>HOJA CORTANTE |
| 8* | 70936460 | 1 5/16"-18 X 3/4 | 12 | SCREW | VIS<br>VITE | SCHRAUBE<br>TORNILLO |
| 9* | Y704015 | 1 5/16"-18 | 12 | NUT UNC | ECROU UNC<br>DADO UNC | MUTTER UNC<br>TUERCA UNC |
| 10* | 851610 | 1 | 2 | BRACKET | SUPPORT FIXATION<br>STAFFETTA | HALTEARM<br>SOPORTE |
| 11* | 851271 | 1 | 2 | GUARD | GARDE<br>PROTEZIONE | SCHUTZVORR<br>DEFENSA |
| 12* | 7703515 | 1 3/8"-16 X 3 | 4 | BOLT UNC | BOULON UNC<br>BULLONE UNC | MASCH.SCHRB.UNC<br>PERNO UNC |
| 13* | 700717523 | 1 | 8 | WASHER | RONDELLE<br>RONDELLA | SCHEIBE<br>ARANDELA |
| 14* | 705038 | 1 3/8" | 4 | LOCK WASHER | RONDELLE FREIN<br>RONDELLA ARRESTO | SICHERUNGSRING<br>ARANDELA SEGURID |
| 15* | 704023 | 1 3/8"-16 | 4 | NUT UNC | ECROU UNC<br>DADO UNC | MUTTER UNC<br>TUERCA UNC |
| 16* | **W247165B** | 1 | 2 | CAP | CHAPEAU<br>CAPUCHON | KAPPE<br>TAPA |

| | | |
|---|---|---|
| **Folding Row Marker** | **Disc** | **30-60** |
| **Traceur Rabattable** | **Disque** | |
| **Klappspurreisser** | **Scheibe** | |
| **Marcasolco Ribaltabile** | **Disco** | |
| **Marcador Abatible** | **Disco** | |

5-PM05-001-A

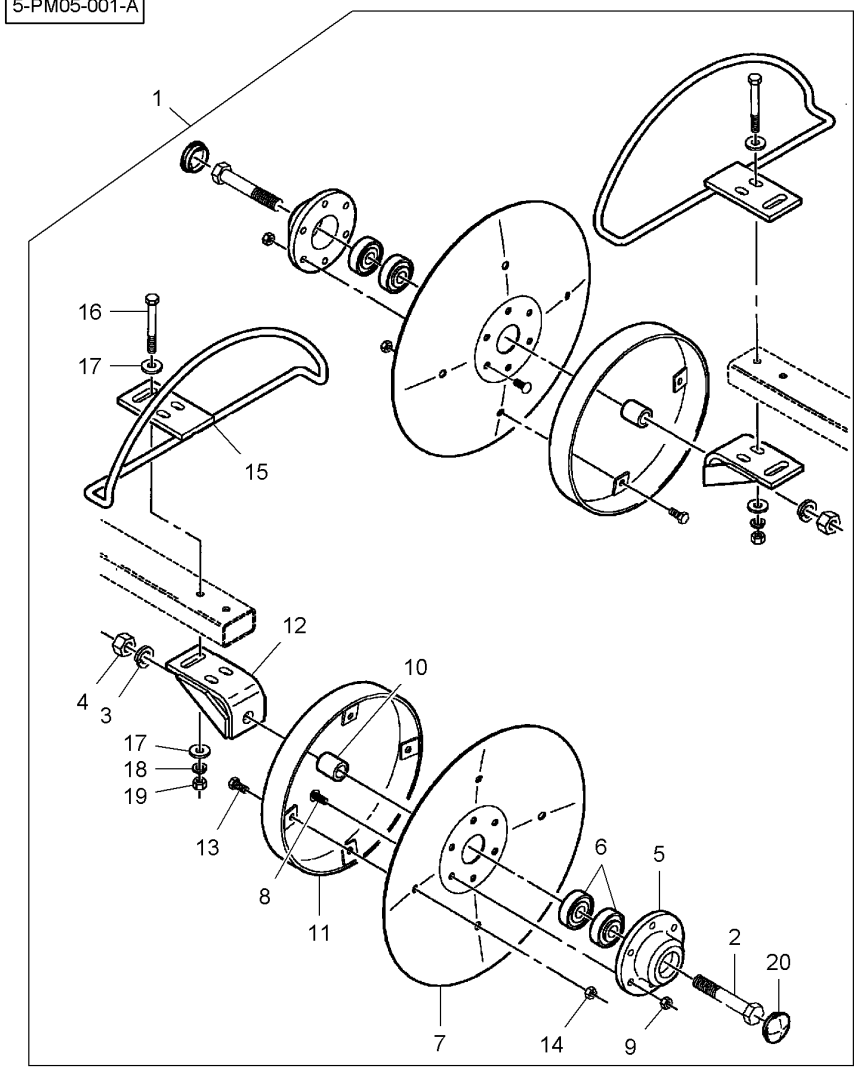


| | | | | | | |
|---|---|---|---|---|---|---|
| 1* | 6000286 | | **1** | KIT, ATTACHMENT | JEU ACCESSOIRES<br>KIT ACCESSORI | SATZ ANBAUTEILE<br>JUEGO ACCESORIO |
| 2* | 70923501 | 1 5/8"-11 X 3-3/4 | **2** | BOLT UNC | BOULON UNC<br>BULLONE UNC | MASCH.SCHRB.UNC<br>PERNO UNC |
| 3* | 70917373 | 1 5/8" | **2** | LOCK WASHER | RONDELLE FREIN<br>RONDELLA ARRESTO | SICHERUNGSRING<br>ARANDELA SEGURID |
| 4* | 70932665 | 1 5/8"-11 | **2** | NUT UNC | ECROU UNC<br>DADO UNC | MUTTER UNC<br>TUERCA UNC |
| 5* | **W248424B** | 1 | **2** | HUB | MOYEU<br>MOZZO | NABE<br>CUBO |
| 6* | **W247167B** | 1 | **4** | BEARING ASSY | ROULEMENT<br>CUSCINETTO COMPL | RADIALLAGER<br>RODAMIENTO RAD |
| 7* | **W248425B** | 1 | **2** | BLADE | LAME<br>LAMA | KLINGE<br>HOJA CORTANTE |
| 8* | 70918249 | 1 5/16"-18 X 3/4 | **12** | SCREW | VIS<br>VITE | SCHRAUBE<br>TORNILLO |
| 9* | Y704015 | 1 5/16"-18 | **12** | NUT UNC | ECROU UNC<br>DADO UNC | MUTTER UNC<br>TUERCA UNC |
| 10* | 01680PM | 1 | **2** | SPACER | ENTRETOISE<br>DISTANZIALE | ABSTANDSTUECK<br>DISCO ESPACIADOR |
| 11* | 854145 | 1 | **2** | RING | ANNEAU<br>ANELLO | RING.<br>ANILLO |
| 12* | 851610 | 1 | **2** | BRACKET | SUPPORT FIXATION<br>STAFFETTA | HALTEARM<br>SOPORTE |
| 13* | 70921332 | 1 5/16"-18 X 3/4 | **8** | BOLT UNC | BOULON UNC<br>BULLONE UNC | MASCH.SCHRB.UNC<br>PERNO UNC |
| 14* | Y704163 | 1 5/16"-18 | **8** | LOCKNUT | ECROU FREIN<br>AUTOBLOCCANTE | SICHERUNGSMUTTER<br>CONTRATUERCA |
| 15* | 851271 | 1 | **2** | GUARD | GARDE<br>PROTEZIONE | SCHUTZVORR<br>DEFENSA |
| 16* | 354273X1 | 1 3/8"-16 X 3 | **4** | BOLT UNC | BOULON UNC<br>BULLONE UNC | MASCH.SCHRB.UNC<br>PERNO UNC |
| 17* | 700717523 | 1 | **8** | WASHER | RONDELLE<br>RONDELLA | SCHEIBE<br>ARANDELA |
| 18* | 70916965 | 1 3/8" | **4** | LOCK WASHER | RONDELLE FREIN<br>RONDELLA ARRESTO | SICHERUNGSRING<br>ARANDELA SEGURID |
| 19* | **70916950** | 1 3/8"-16 | **4** | NUT UNC | ECROU UNC<br>DADO UNC | MUTTER UNC<br>TUERCA UNC |
| 20* | **W247165B** | 1 | **2** | CAP | CHAPEAU<br>CAPUCHON | KAPPE<br>TAPA |

**Row Marker**
**Traceur**
**Spurreisser**
**Marcasolco**
**Marcador**

# 30-65

5-PL03-002-B

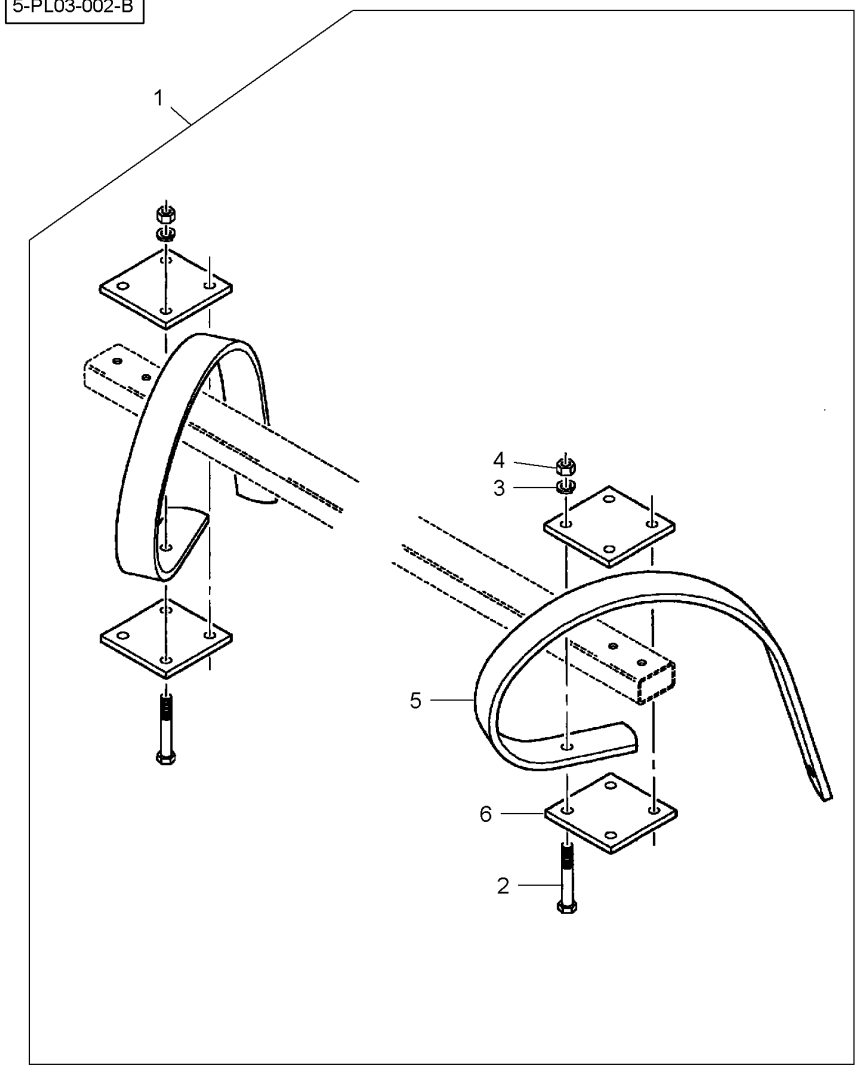


| | | | | | | |
|---|---|---|---|---|---|---|
| 1 | 9010065 | | **1** | KIT, ATTACHMENT | JEU ACCESSOIRES<br>KIT ACCESSORI | SATZ ANBAUTEILE<br>JUEGO ACCESORIO |
| 2 | 70920990 | 1 1/2"-13 X 3-1/2 | **8** | BOLT UNC | BOULON UNC<br>BULLONE UNC | MASCH.SCHRB.UNC<br>PERNO UNC |
| 3* | Y705046 | 1 1/2" | **8** | LOCK WASHER | RONDELLE FREIN<br>RONDELLA ARRESTO | SICHERUNGSRING<br>ARANDELA SEGURID |
| 4 | 375098X1 | 1 1/2"-13 | **8** | NUT UNC | ECROU UNC<br>DADO UNC | MUTTER UNC<br>TUERCA UNC |
| 5 | W248427B | 1 | **2** | SPRING | RESSORT<br>MOLLA | FEDER<br>MUELLE |
| 6 | W248428B | 1 | **4** | PLATE | PLAQUE<br>PIASTRA | PLATTE<br>PLATO |

**Row Marker**
**Traceur**
**Spurreisser**
**Marcasolco**
**Marcador**

**30-70**

5-PL03-003-A

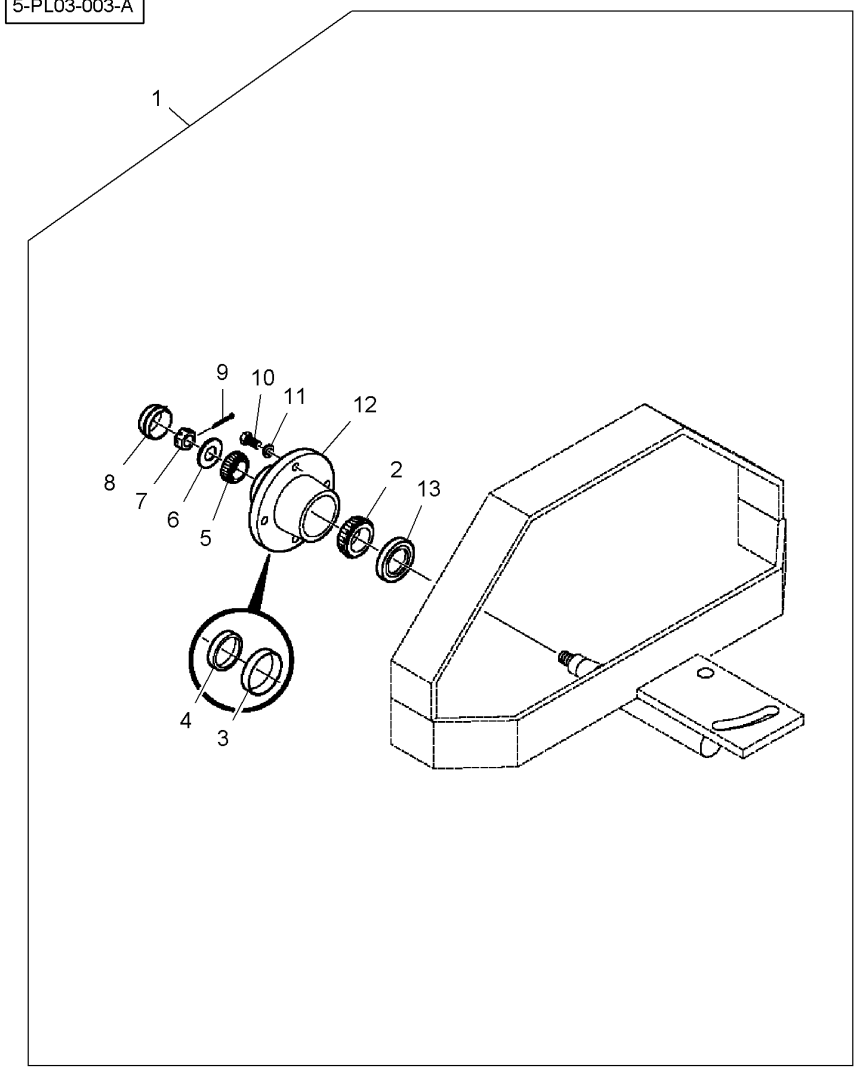


| | | | | | | |
|---|---|---|---|---|---|---|
| 1* | BA5945 | | | **1** | KIT, ATTACHMENT | JEU ACCESSOIRES<br>KIT ACCESSORI | SATZ ANBAUTEILE<br>JUEGO ACCESORIO |
| 2* | 710236 | 1 | | **1** | ANGUL.BALL BEAR. | ROULEMENT CONIQU<br>ANGUL.BALL BEAR. | SCHRAEGKUGELLAG.<br>ANGUL.BALL BEAR. |
| 3* | 710228 | 12 | | **1** | BEARING CUP | CUVETTE ROULEMNT<br>COPPA CUSCINETTO | LAGERAUSSENRING<br>ANILLO COJINETE |
| 4* | 51706 | 12 | | **1** | BEARING CUP | CUVETTE ROULEMNT<br>COPPA CUSCINETTO | LAGERAUSSENRING<br>ANILLO COJINETE |
| 5* | 51714 | 1 | | **1** | ANGUL.BALL BEAR. | ROULEMENT CONIQU<br>ANGUL.BALL BEAR. | SCHRAEGKUGELLAG.<br>ANGUL.BALL BEAR. |
| 6* | **BR0233** | 1 | 5/8" | **1** | WASHER | RONDELLE<br>RONDELLA | SCHEIBE<br>ARANDELA |
| 7* | 7774185 | 1 | 5/8"-18 | **1** | NUT UNF | ECROU UNF<br>DADO UNF | MUTTER UNF<br>TUERCA UNF |
| 8* | **700721844** | 1 | | **1** | CAP | CHAPEAU<br>CAPUCHON | KAPPE<br>TAPA |
| 9* | 62190 | 1 | 5/32" X 1-1/2 | **1** | PIN | GOUPILLE<br>COPPIGLIA | STIFT<br>PASADOR |
| 10* | 703181 | 1 | 1/2"-20 X 1 | **4** | BOLT | BOULON<br>BULLONE | BOLZEN<br>BULON |
| 11* | 705046 | 1 | 1/2" | **4** | LOCK WASHER | RONDELLE FREIN<br>RONDELLA ARRESTO | SICHERUNGSRING<br>ARANDELA SEGURID |
| 12* | 700721846 | 1 | | **1** | HUB | MOYEU<br>MOZZO | NABE<br>CUBO |
| 13* | **744888** | 1 | | **1** | SEAL | JOINT ETANCHEITE<br>GIUNTO ROTONDO | DICHTRING<br>JUNTA REDONDA |

**Row Marker**
**Traceur**
**Spurreisser**
**Marcasolco**
**Marcador**

**30-75**

5-PL03-004-A

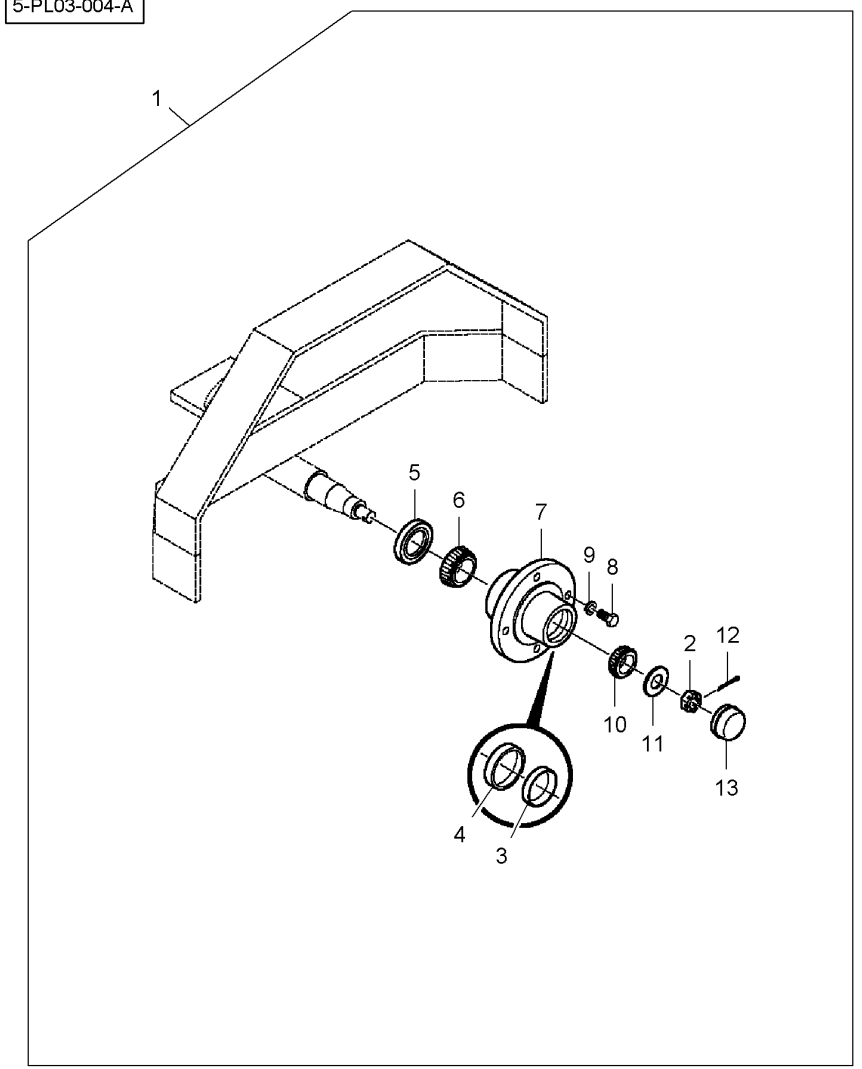


| | | | | | | |
|---|---|---|---|---|---|---|
| 1* | BA5946 | | | **1** | KIT, ATTACHMENT | JEU ACCESSOIRES<br>KIT ACCESSORI<br>SATZ ANBAUTEILE<br>JUEGO ACCESORIO |
| 2* | 7774185 | 1 | 5/8"-18 | **1** | NUT UNF | ECROU UNF<br>DADO UNF<br>MUTTER UNF<br>TUERCA UNF |
| 3* | 51706 | 7 | | **1** | BEARING CUP | CUVETTE ROULEMNT<br>COPPA CUSCINETTO<br>LAGERAUSSENRING<br>ANILLO COJINETE |
| 4* | 710228 | 7 | | **1** | BEARING CUP | CUVETTE ROULEMNT<br>COPPA CUSCINETTO<br>LAGERAUSSENRING<br>ANILLO COJINETE |
| 5* | **744888** | 1 | | **1** | SEAL | JOINT ETANCHEITE<br>GIUNTO ROTONDO<br>DICHTRING<br>JUNTA REDONDA |
| 6* | 710236 | 1 | | **1** | ANGUL.BALL BEAR. | ROULEMENT CONIQU<br>ANGUL.BALL BEAR.<br>SCHRAEGKUGELLAG.<br>ANGUL.BALL BEAR. |
| 7* | 700721846 | 1 | | **1** | HUB | MOYEU<br>MOZZO<br>NABE<br>CUBO |
| 8* | 703181 | 1 | 1/2"-20 X 1 | **4** | BOLT | BOULON<br>BULLONE<br>BOLZEN<br>BULON |
| 9* | 705046 | 1 | 1/2" | **4** | LOCK WASHER | RONDELLE FREIN<br>RONDELLA ARRESTO<br>SICHERUNGSRING<br>ARANDELA SEGURID |
| 10* | 51714 | 1 | | **1** | ANGUL.BALL BEAR. | ROULEMENT CONIQU<br>ANGUL.BALL BEAR.<br>SCHRAEGKUGELLAG.<br>ANGUL.BALL BEAR. |
| 11* | **BR0233** | 1 | 5/8" | **1** | WASHER | RONDELLE<br>RONDELLA<br>SCHEIBE<br>ARANDELA |
| 12* | 62190 | 1 | 5/32" X 1-1/2 | **1** | PIN | GOUPILLE<br>COPPIGLIA<br>STIFT<br>PASADOR |
| 13* | **700721844** | 1 | | **1** | CAP | CHAPEAU<br>CAPUCHON<br>KAPPE<br>TAPA |

40

| Wheel Lift Hydraulic<br>Relevage Hydraulique De Roue<br>Räder Hydraulischer<br>Sollevatore Idraulico Di Ruota<br>Elevador Hidráulico De Rueda | 40-5 | 3 & 4 Rows<br>3 & 4 Rangs<br>3 & 4 Reihes<br>3 & 4 Lineas<br>3 & 4 Lineas |
|---|---|---|

5-PM07-001-A

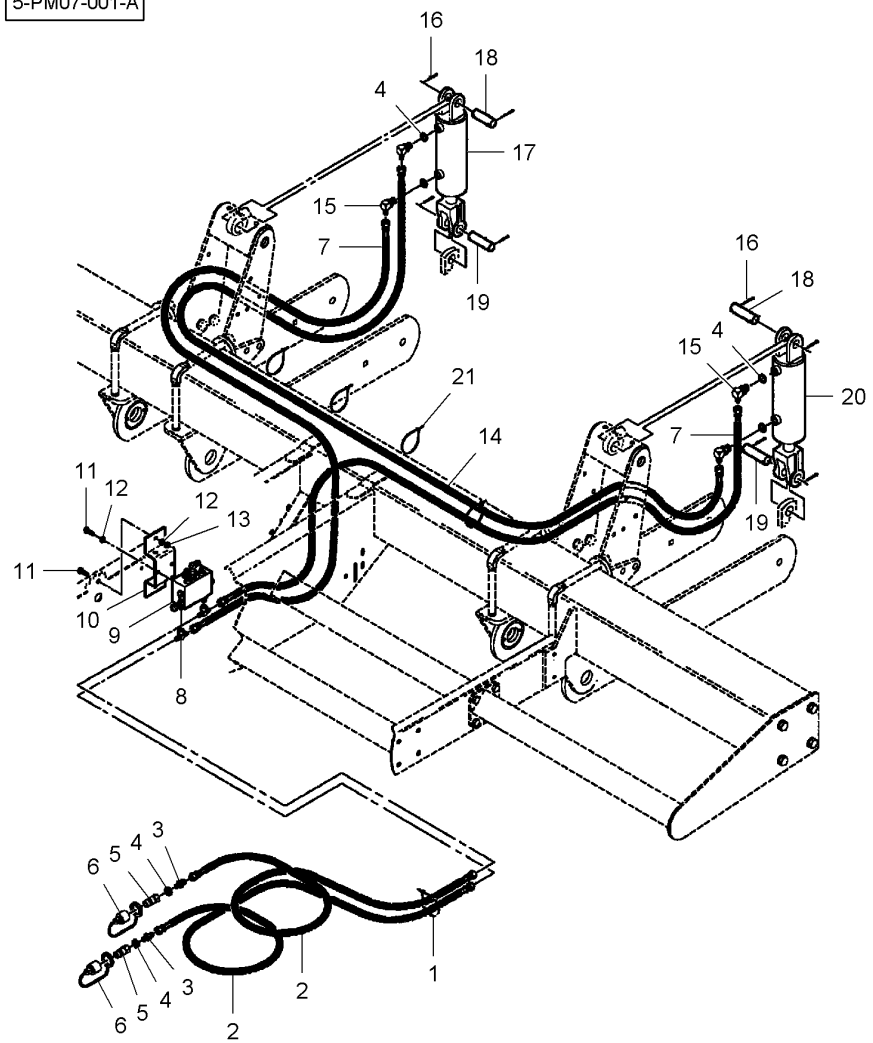


| | | | | | |
|---|---|---|---|---|---|
| 1* | 7724347 | | 7 | CABLE TIE | ATTACHE CABLE<br>FASCETTA CAVI<br>KABELBINDER<br>APRIETACABLES |
| 2* | 851835 | ◀▶ 106" | 2 | HYDRAULIC HOSE | DURITE HYDRAULIC<br>TUBO HYDRAULICO<br>HYDRAUL.SCHLAUCH<br>TUBO HYDRAULICO |
| 3* | 360202X91 | | 2 | UNION | RACCORD<br>RACCORDO<br>VERSCHRAUBUNG<br>RACOR |
| 3* | **7037781** | 3 | 1 | O RING | JOINT TORIQUE<br>GIUNTO DI TENUTA<br>O-RING<br>JUNTA TOROIDAL |
| 4* | **7037781** | | 1 | O RING | JOINT TORIQUE<br>GIUNTO DI TENUTA<br>O-RING<br>JUNTA TOROIDAL |
| 5* | 700703886 | | 2 | MALE COUPLER | COUPLEUR MALE<br>GIUNTO MASCHIO<br>KUPPLST.INNEN<br>ACOPLADOR MACHO |
| 6* | **737016** | | 2 | PLUG | BOUCHON<br>TAPPO<br>STOPFEN<br>TAPON |
| 7* | 851834 | [AC]<br>◀▶ 92" | 2 | HYDRAULIC HOSE | DURITE HYDRAULIC<br>TUBO HYDRAULICO<br>HYDRAUL.SCHLAUCH<br>TUBO HYDRAULICO |
| 7* | 851400 | [B]<br>◀▶ 152" | 2 | HYDRAULIC HOSE | DURITE HYDRAULIC<br>TUBO HYDRAULICO<br>HYDRAUL.SCHLAUCH<br>TUBO HYDRAULICO |
| 8* | 70921014 | | 2 | TEEPIECE | TE<br>RACCORDO A T<br>T-STUECK<br>PIEZA EN T |
| 9* | N851998 | 👁 40-65 No 1 | 1 | VALVE | SOUPAPE<br>VALVOLA<br>VENTIL<br>VALVULA |
| 10* | 853853 | | 1 | BRACKET | SUPPORT FIXATION<br>STAFFETTA<br>HALTEARM<br>SOPORTE |
| 11* | 70921210 | 3/8"-16 X 1 | 4 | BOLT UNC | BOULON UNC<br>BULLONE UNC<br>MASCH.SCHRB.UNC<br>PERNO UNC |
| 12* | 70916965 | 3/8" | 4 | LOCK WASHER | RONDELLE FREIN<br>RONDELLA ARRESTO<br>SICHERUNGSRING<br>ARANDELA SEGURID |
| 13* | **70916950** | 3/8"-16 | 2 | NUT UNC | ECROU UNC<br>DADO UNC<br>MUTTER UNC<br>TUERCA UNC |
| 14* | 851470 | [AC]<br>◀▶ 98" | 1 | HYDRAULIC HOSE | DURITE HYDRAULIC<br>TUBO HYDRAULICO<br>HYDRAUL.SCHLAUCH<br>TUBO HYDRAULICO |
| 14* | 852473 | [B]<br>◀▶ 252" | 1 | HYDRAULIC HOSE | DURITE HYDRAULIC<br>TUBO HYDRAULICO<br>HYDRAUL.SCHLAUCH<br>TUBO HYDRAULICO |
| 15* | 70923905 | | 4 | ELBOW NIPPLE | RACCORD COUDE<br>NIPPLO GOMITO<br>WINKELSTUTZEN<br>CODO DE UNION |
| 15* | **7037781** | 15 | 1 | O RING | JOINT TORIQUE<br>GIUNTO DI TENUTA<br>O-RING<br>JUNTA TOROIDAL |
| 16* | 932036 | 3/16" X 1-1/2 | 8 | SPLIT PIN | GOUPILLE FENDUE<br>COPIGLIA<br>SPALTBOLZEN<br>PASADOR HENDIDO |
| 17* | 854984 | 👁 40-70 No 1 | 1 | HYDRAULIC, CYLIN | VERIN HYDRAULI.<br>CILINDRO IDRAULI<br>HYDRAULIK ZYLIND<br>CILINDRO IDRAULI |
| 18* | N15148 | 1" X 3 | 3 | CLEVIS PIN | AXE<br>PERNO D'ATTACCO<br>SPLINTBOLZEN<br>BULON CILINDRICO |
| 19* | W247969B | 1" X 3-3/8 | 2 | PIN | GOUPILLE<br>COPPIGLIA<br>STIFT<br>PASADOR |
| 20* | 854985 | 👁 40-70 No 1 | 1 | HYDRAULIC, CYLIN | VERIN HYDRAULI.<br>CILINDRO IDRAULI<br>HYDRAULIK ZYLIND<br>CILINDRO IDRAULI |
| 21* | 70937133 | | 7 | CABLE TIE | ATTACHE CABLE<br>FASCETTA CAVI<br>KABELBINDER<br>APRIETACABLES |

| | | |
|---|---|---|
| **Wheel Lift Hydraulic**<br>**Relevage Hydraulique De Roue**<br>**Räder Hydraulischer**<br>**Sollevatore Idraulico Di Ruota**<br>**Elevador Hidráulico De Rueda** | **40-5** | **3 & 4 Rows**<br>**3 & 4 Rangs**<br>**3 & 4 Reihes**<br>**3 & 4 Lineas**<br>**3 & 4 Lineas** |

5-PM07-001-A

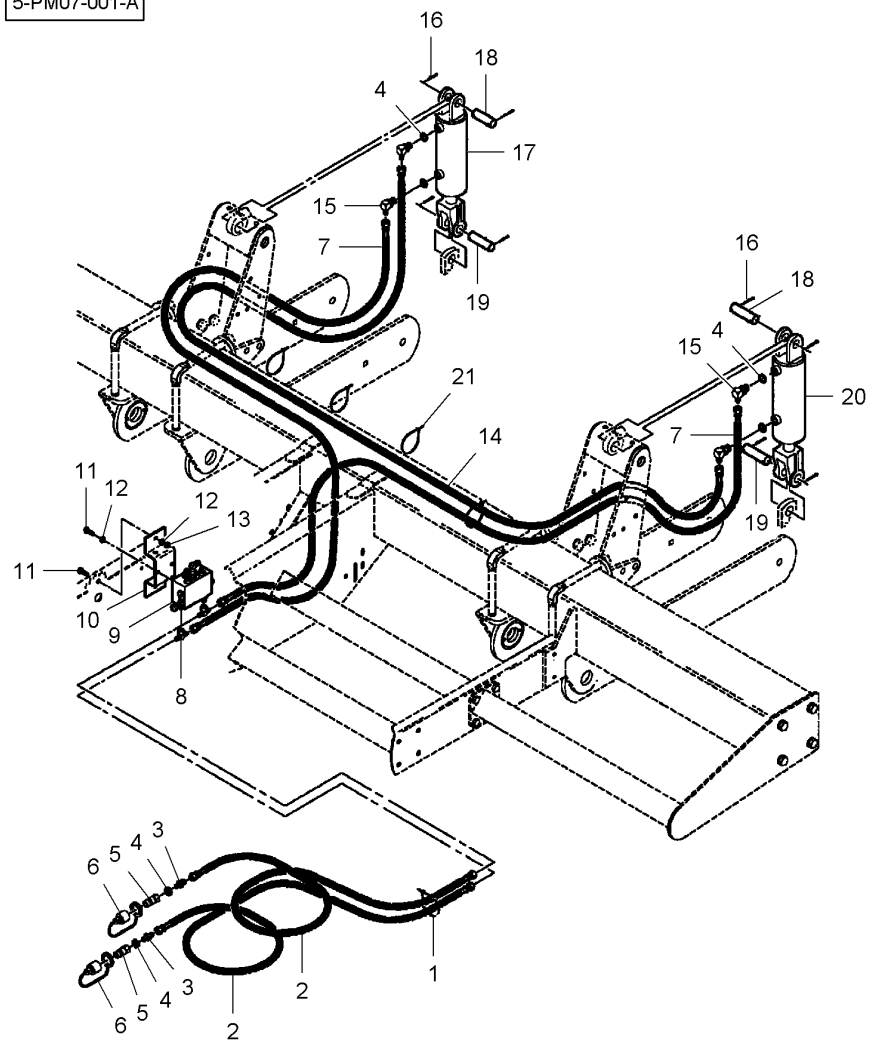


[A] 3 ROWS WITH 1,5 M SPACING
3 RANGS AVEC ESPACEMENT 1,5 M
3 REIHE MIT ABSTAND 1,5 M
3 LINEAS CON DISTANZIAMENTO 1,5 M
3 LINEAS CON ESPACIAMIENTO 1,5 M

[B] 3 ROWS WITH 2,3 M SPACING
3 RANGS AVEC ESPACEMENT 2,3 M
3 REIHE MIT ABSTAND 2,3 M
3 LINEAS CON DISTANZIAMENTO 2,3 M
3 LINEAS CON ESPACIAMIENTO 2,3 M

[C] 4 ROW
4 RANGS
4 REIHE
4 LINEA
4 LINEA

| Wheel Lift Hydraulic<br>Relevage Hydraulique De Roue<br>Räder Hydraulischer<br>Sollevatore Idraulico Di Ruota<br>Elevador Hidráulico De Rueda | 40-10 | 6 Rows - Left Side<br>6 Rangs - Cote Gauche<br>6 Reihen - Linke Seite<br>6 Lineas - Lato Sinistro<br>6 Lineas - Lado Izquierdo |
|---|---|---|

5-PM07-002-A

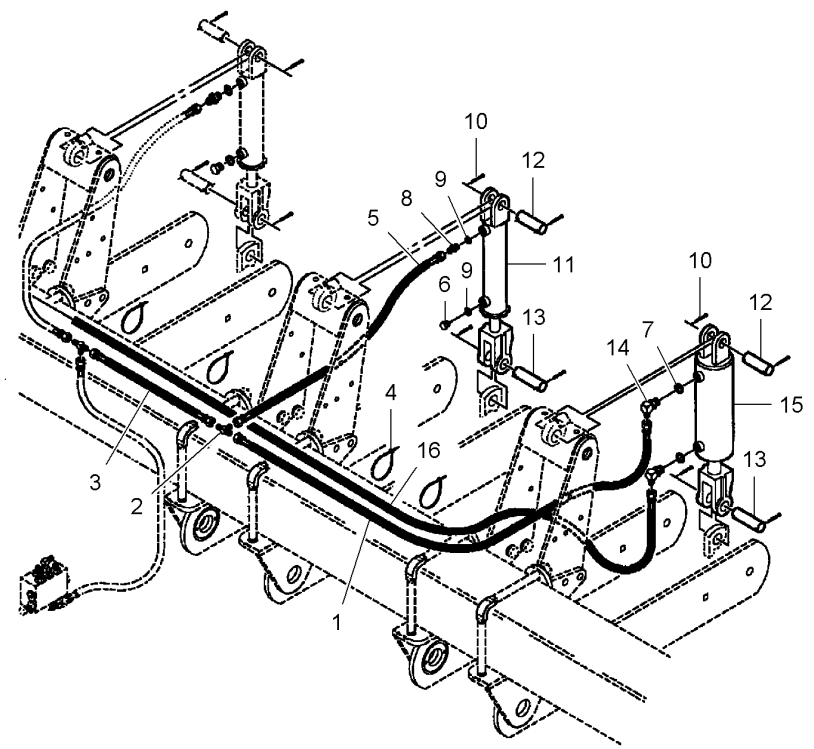


| | | | | | |
|---|---|---|---|---|---|
| 1* | 851465 | [A]<br>◀▶ 41" | 1 | HYDRAULIC HOSE | DURITE HYDRAULIC<br>TUBO HYDRAULICO | HYDRAUL.SCHLAUCH<br>TUBO HYDRAULICO |
| 1* | 851466 | [B]<br>◀▶ 50" | 1 | HYDRAULIC HOSE | DURITE HYDRAULIC<br>TUBO HYDRAULICO | HYDRAUL.SCHLAUCH<br>TUBO HYDRAULICO |
| 2* | 70919087 | | 1 | TEEPIECE | TE<br>RACCORDO A T | T-STUECK<br>PIEZA EN T |
| 3* | 851331 | [A]<br>◀▶ 32" | 1 | HYDRAULIC HOSE | DURITE HYDRAULIC<br>TUBO HYDRAULICO | HYDRAUL.SCHLAUCH<br>TUBO HYDRAULICO |
| 3* | 851332 | [B]<br>◀▶ 38" | 1 | HYDRAULIC HOSE | DURITE HYDRAULIC<br>TUBO HYDRAULICO | HYDRAUL.SCHLAUCH<br>TUBO HYDRAULICO |
| 4* | 70937133 | | 7 | CABLE TIE | ATTACHE CABLE<br>FASCETTA CAVI | KABELBINDER<br>APRIETACABLES |
| 5* | 851330 | ◀▶ 14" | 1 | HYDRAULIC HOSE | DURITE HYDRAULIC<br>TUBO HYDRAULICO | HYDRAUL.SCHLAUCH<br>TUBO HYDRAULICO |
| 6* | **854835** | 9/16"-18 | 1 | PLUG | BOUCHON<br>TAPPO | STOPFEN<br>TAPON |
| 6* | **70921885** | 6 | 1 | O RING | JOINT TORIQUE<br>GIUNTO DI TENUTA | O-RING<br>JUNTA TOROIDAL |
| 7* | **7037781** | | X | O RING | JOINT TORIQUE<br>GIUNTO DI TENUTA | O-RING<br>JUNTA TOROIDAL |
| 8* | 846634 | | 1 | UNION | RACCORD<br>RACCORDO | VERSCHRAUBUNG<br>RACOR |
| 8* | **70921885** | 8 | 1 | O RING | JOINT TORIQUE<br>GIUNTO DI TENUTA | O-RING<br>JUNTA TOROIDAL |
| 9* | **70921885** | | X | O RING | JOINT TORIQUE<br>GIUNTO DI TENUTA | O-RING<br>JUNTA TOROIDAL |
| 10* | 932036 | 3/16" X 1-1/2 | 8 | SPLIT PIN | GOUPILLE FENDUE<br>COPIGLIA | SPALTBOLZEN<br>PASADOR HENDIDO |
| 11* | 526929 | ➡| ...<br>👁 40-75 No 1 | 1 | HYDRAULIC, CYLIN | VERIN HYDRAULI.<br>CILINDRO IDRAULI | HYDRAULIK ZYLIND<br>CILINDRO IDRAULI |
| 11* | 700724409 | ➡ ...<br>👁 40-75 No 1 | 1 | HYDRAULIC, CYLIN | VERIN HYDRAULI.<br>CILINDRO IDRAULI | HYDRAULIK ZYLIND<br>CILINDRO IDRAULI |
| 12* | N15148 | 1" X 3 | 3 | CLEVIS PIN | AXE<br>PERNO D'ATTACCO | SPLINTBOLZEN<br>BULON CILINDRICO |
| 13* | W247969B | 1" X 3-3/8 | 2 | PIN | GOUPILLE<br>COPPIGLIA | STIFT<br>PASADOR |
| 14* | 70923905 | | 2 | ELBOW NIPPLE | RACCORD COUDE<br>NIPPLO GOMITO | WINKELSTUTZEN<br>CODO DE UNION |
| 14* | **7037781** | 14 | 1 | O RING | JOINT TORIQUE<br>GIUNTO DI TENUTA | O-RING<br>JUNTA TOROIDAL |
| 15* | 854985 | 👁 40-70 No 1 | 1 | HYDRAULIC, CYLIN | VERIN HYDRAULI.<br>CILINDRO IDRAULI | HYDRAULIK ZYLIND<br>CILINDRO IDRAULI |
| 16* | 851471 | [A]<br>◀▶ 135" | 1 | HYDRAULIC HOSE | DURITE HYDRAULIC<br>TUBO HYDRAULICO | HYDRAUL.SCHLAUCH<br>TUBO HYDRAULICO |
| 16* | 852533 | [B]<br>◀▶ 169" | 1 | HYDRAULIC HOSE | DURITE HYDRAULIC<br>TUBO HYDRAULICO | HYDRAUL.SCHLAUCH<br>TUBO HYDRAULICO |

[A] 6 ROW NARROW
6 RANGS ETROITS
6 SCHMAL REIHE
6 LINEAS STRETTA
6 LINEAS ESTRECHO

| | | |
|---|---|---|
| **Wheel Lift Hydraulic**<br>**Relevage Hydraulique De Roue**<br>**Räder Hydraulischer**<br>**Sollevatore Idraulico Di Ruota**<br>**Elevador Hidráulico De Rueda** | **40-10** | **6 Rows - Left Side**<br>**6 Rangs - Cote Gauche**<br>**6 Reihen - Linke Seite**<br>**6 Lineas - Lato Sinistro**<br>**6 Lineas - Lado Izquierdo** |

5-PM07-002-A

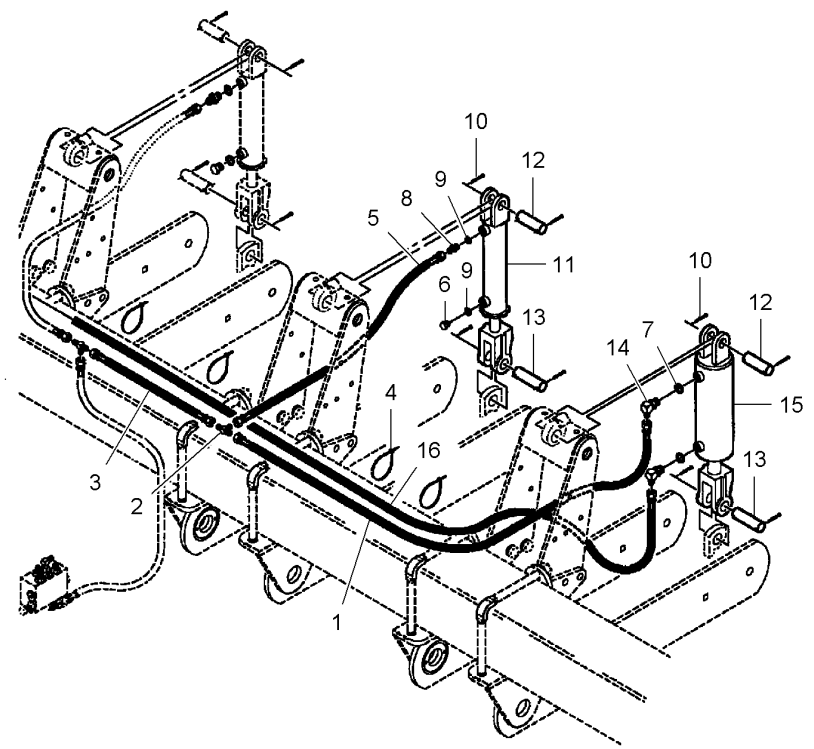


[B] 6 ROW WIDE
6 RANGS LARGES
6 BREITE REIHE
6 LINEAS LARGA
6 LINEAS ANCHA

**Wheel Lift Hydraulic**
**Relevage Hydraulique De Roue**
**Räder Hydraulischer**
**Sollevatore Idraulico Di Ruota**
**Elevador Hidráulico De Rueda**

**40-15**

**6 Rows - Right Side**
**6 Rangs - Cote Droit**
**6 Reihen - Rechte Seite**
**6 Lineas - Lato Destro**
**6 Lineas - Lado Derecho**

5-PM07-003-A

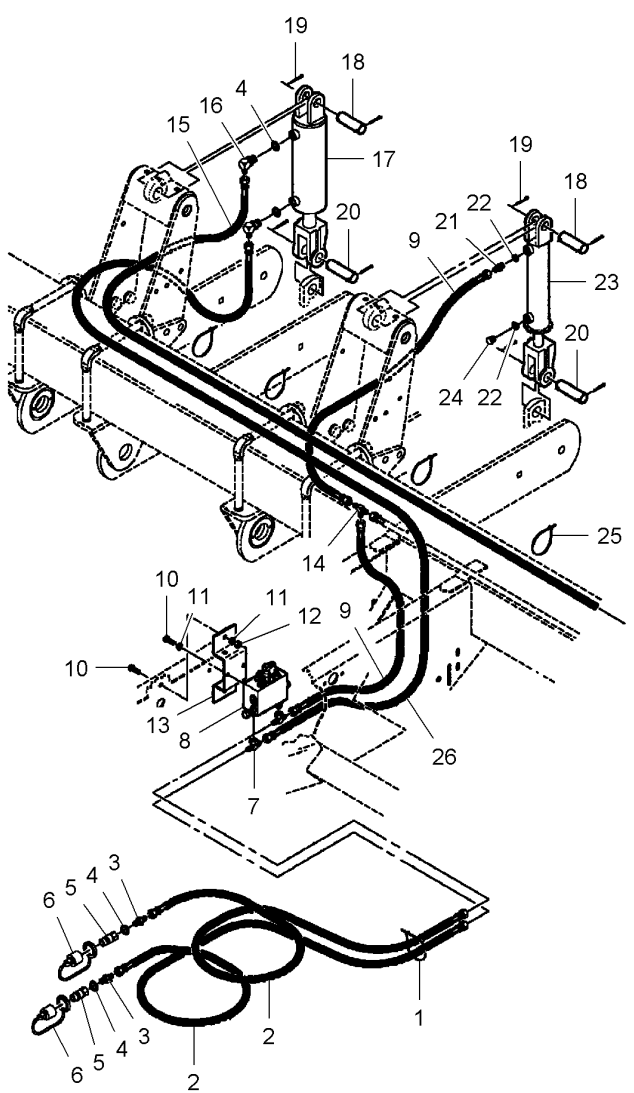


| | | | | | |
|---|---|---|---|---|---|
| 1* | 7724347 | | 7 | CABLE TIE | ATTACHE CABLE<br>FASCETTA CAVI<br>APRIETACABLES |
| 2* | 851835 | ◀▶ 106" | 2 | HYDRAULIC HOSE | DURITE HYDRAULIC<br>TUBO HYDRAULICO<br>HYDRAUL.SCHLAUCH<br>TUBO HYDRAULICO |
| 3* | 360202X91 | | 2 | UNION | RACCORD<br>RACCORDO<br>VERSCHRAUBUNG<br>RACOR |
| 3* | **7037781** | 3 | 1 | O RING | JOINT TORIQUE<br>GIUNTO DI TENUTA<br>O-RING<br>JUNTA TOROIDAL |
| 4* | **7037781** | | X | O RING | JOINT TORIQUE<br>GIUNTO DI TENUTA<br>O-RING<br>JUNTA TOROIDAL |
| 5* | 700703886 | | 2 | MALE COUPLER | COUPLEUR MALE<br>GIUNTO MASCHIO<br>KUPPLST.INNEN<br>ACOPLADOR MACHO |
| 6* | **737016** | | 2 | PLUG | BOUCHON<br>TAPPO<br>STOPFEN<br>TAPON |
| 7* | 70921014 | | 2 | TEEPIECE | TE<br>RACCORDO A T<br>T-STUECK<br>PIEZA EN T |
| 8* | N851998 | 👁 40-65 No 1 | 1 | VALVE | SOUPAPE<br>VALVOLA<br>VENTIL<br>VALVULA |
| 9* | 851465 | [A]<br>◀▶ 41" | 2 | HYDRAULIC HOSE | DURITE HYDRAULIC<br>TUBO HYDRAULICO<br>HYDRAUL.SCHLAUCH<br>TUBO HYDRAULICO |
| 9* | 851466 | [B]<br>◀▶ 50" | 2 | HYDRAULIC HOSE | DURITE HYDRAULIC<br>TUBO HYDRAULICO<br>HYDRAUL.SCHLAUCH<br>TUBO HYDRAULICO |
| 10* | 70921210 | 3/8"-16 X 1 | 4 | BOLT UNC | BOULON UNC<br>BULLONE UNC<br>MASCH.SCHRB.UNC<br>PERNO UNC |
| 11* | 70916965 | 3/8" | 4 | LOCK WASHER | RONDELLE FREIN<br>RONDELLA ARRESTO<br>SICHERUNGSRING<br>ARANDELA SEGURID |
| 12* | **70916950** | 3/8"-16 | 2 | NUT UNC | ECROU UNC<br>DADO UNC<br>MUTTER UNC<br>TUERCA UNC |
| 13* | 853853 | | 1 | BRACKET | SUPPORT FIXATION<br>STAFFETTA<br>HALTEARM<br>SOPORTE |
| 14* | 70919087 | | 1 | TEEPIECE | TE<br>RACCORDO A T<br>T-STUECK<br>PIEZA EN T |
| 15* | 851471 | [A]<br>◀▶ 135" | 1 | HYDRAULIC HOSE | DURITE HYDRAULIC<br>TUBO HYDRAULICO<br>HYDRAUL.SCHLAUCH<br>TUBO HYDRAULICO |
| 15* | 852533 | [B]<br>◀▶ 169" | 1 | HYDRAULIC HOSE | DURITE HYDRAULIC<br>TUBO HYDRAULICO<br>HYDRAUL.SCHLAUCH<br>TUBO HYDRAULICO |
| 16* | 70923905 | | 2 | ELBOW NIPPLE | RACCORD COUDE<br>NIPPLO GOMITO<br>WINKELSTUTZEN<br>CODO DE UNION |
| 16* | **7037781** | 16 | 1 | O RING | JOINT TORIQUE<br>GIUNTO DI TENUTA<br>O-RING<br>JUNTA TOROIDAL |
| 17* | 854984 | 👁 40-70 No 1 | 1 | HYDRAULIC, CYLIN | VERIN HYDRAULI.<br>CILINDRO IDRAULI<br>HYDRAULIK ZYLIND<br>CILINDRO IDRAULI |
| 18* | N15148 | 1" X 3 | 2 | CLEVIS PIN | AXE<br>PERNO D'ATTACCO<br>SPLINTBOLZEN<br>BULON CILINDRICO |
| 19* | 932036 | 3/16 X 1-1/2 | 8 | SPLIT PIN | GOUPILLE FENDUE<br>COPIGLIA<br>SPALTBOLZEN<br>PASADOR HENDIDO |
| 20* | W247969B | 1" X 3-3/8 | 2 | PIN | GOUPILLE<br>COPPIGLIA<br>STIFT<br>PASADOR |
| 21* | 846634 | | 1 | UNION | RACCORD<br>RACCORDO<br>VERSCHRAUBUNG<br>RACOR |
| 21* | **70921885** | 21 | 1 | O RING | JOINT TORIQUE<br>GIUNTO DI TENUTA<br>O-RING<br>JUNTA TOROIDAL |

**Wheel Lift Hydraulic**
**Relevage Hydraulique De Roue**
**Räder Hydraulischer**
**Sollevatore Idraulico Di Ruota**
**Elevador Hidráulico De Rueda**

**40-15**

**6 Rows - Right Side**
**6 Rangs - Cote Droit**
**6 Reihen - Rechte Seite**
**6 Lineas - Lato Destro**
**6 Lineas - Lado Derecho**

5-PM07-003-A

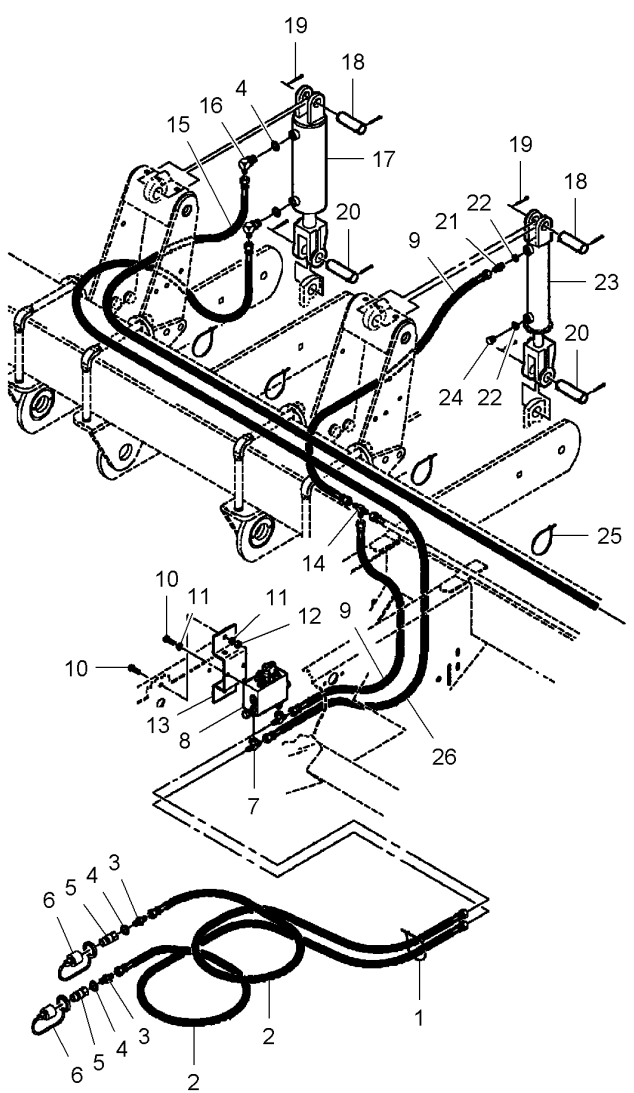


| | | | | | |
|---|---|---|---|---|---|
| 22* | **70921885** | | **X** O RING | JOINT TORIQUE<br>GIUNTO DI TENUTA | O-RING<br>JUNTA TOROIDAL |
| 23* | 526929 | ...<br>40-75 No 1 | **1** HYDRAULIC, CYLIN | VERIN HYDRAULI.<br>CILINDRO IDRAULI | HYDRAULIK ZYLIND<br>CILINDRO IDRAULI |
| 23* | 700724409 | ...<br>40-75 No 1 | **1** HYDRAULIC, CYLIN | VERIN HYDRAULI.<br>CILINDRO IDRAULI | HYDRAULIK ZYLIND<br>CILINDRO IDRAULI |
| 24* | **854835** | 9/16"-18 | **1** PLUG | BOUCHON<br>TAPPO | STOPFEN<br>TAPON |
| 24* | **70921885** | 24 | **1** O RING | JOINT TORIQUE<br>GIUNTO DI TENUTA | O-RING<br>JUNTA TOROIDAL |
| 25* | 70937133 | | **7** CABLE TIE | ATTACHE CABLE<br>FASCETTA CAVI | KABELBINDER<br>APRIETACABLES |
| 26* | 851835 | [A]<br>106" | **1** HYDRAULIC HOSE | DURITE HYDRAULIC<br>TUBO HYDRAULICO | HYDRAUL.SCHLAUCH<br>TUBO HYDRAULICO |
| 26* | 852533 | [B]<br>169" | **1** HYDRAULIC HOSE | DURITE HYDRAULIC<br>TUBO HYDRAULICO | HYDRAUL.SCHLAUCH<br>TUBO HYDRAULICO |

[A] 6 ROW NARROW
6 RANGS ETROITS
6 SCHMAL REIHE
6 LINEAS STRETTA
6 LINEAS ESTRECHO

[B] 6 ROW WIDE
6 RANGS LARGES
6 BREITE REIHE
6 LINEAS LARGA
6 LINEAS ANCHA

**Wheel Lift Hydraulic**
**Relevage Hydraulique De Roue**
**Räder Hydraulischer**
**Sollevatore Idraulico Di Ruota**
**Elevador Hidráulico De Rueda**

**40-20**

**8 Narrow Rows - Left Side**
**8 Rangs Etroits - Cote Gauche**
**8 Enge Reihen - Linke Seite**
**8 Lineas Stretti - Lato Sinistro**
**8 Lineas Estrechos - Lado Izquierdo**

5-PM07-004-A

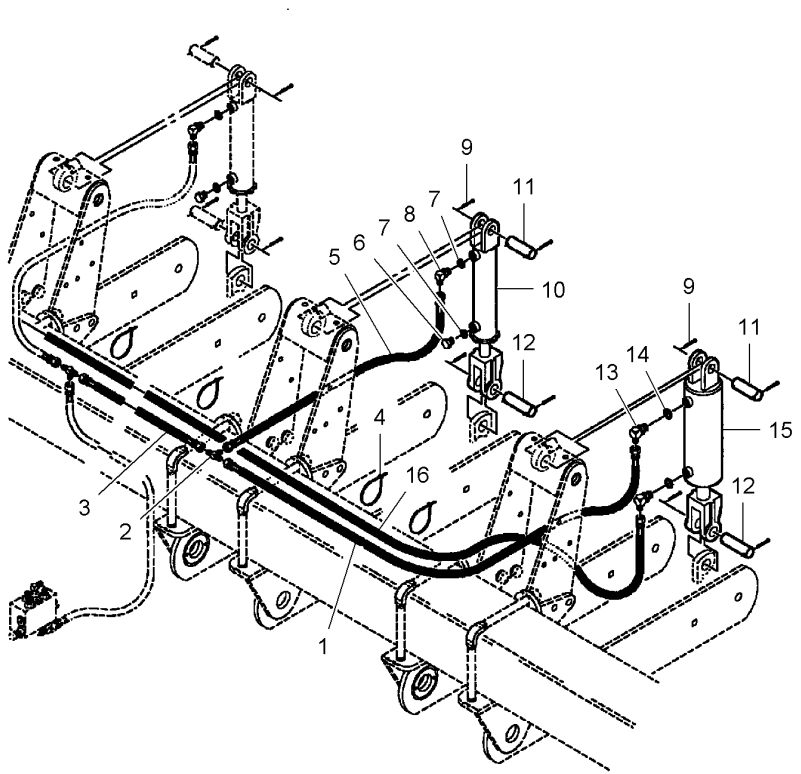


| | | | | | |
|---|---|---|---|---|---|
| 1* | 851832 | ◀▶ 74" | 1 | HYDRAULIC HOSE | DURITE HYDRAULIC<br>TUBO HYDRAULICO<br>HYDRAUL.SCHLAUCH<br>TUBO HYDRAULICO |
| 2* | 70919087 | | 1 | TEEPIECE | TE<br>RACCORDO A T<br>T-STUECK<br>PIEZA EN T |
| 3* | 851331 | ◀▶ 32" | 1 | HYDRAULIC HOSE | DURITE HYDRAULIC<br>TUBO HYDRAULICO<br>HYDRAUL.SCHLAUCH<br>TUBO HYDRAULICO |
| 4* | 70937133 | | 7 | CABLE TIE | ATTACHE CABLE<br>FASCETTA CAVI<br>KABELBINDER<br>APRIETACABLES |
| 5* | 851330 | ◀▶ 14" | 1 | HYDRAULIC HOSE | DURITE HYDRAULIC<br>TUBO HYDRAULICO<br>HYDRAUL.SCHLAUCH<br>TUBO HYDRAULICO |
| 6* | **854835** | 9/16"-18 | 1 | PLUG | BOUCHON<br>TAPPO<br>STOPFEN<br>TAPON |
| 6* | **70921885** | 6 | 1 | O RING | JOINT TORIQUE<br>GIUNTO DI TENUTA<br>O-RING<br>JUNTA TOROIDAL |
| 7* | **70921885** | | X | O RING | JOINT TORIQUE<br>GIUNTO DI TENUTA<br>O-RING<br>JUNTA TOROIDAL |
| 8* | 70922523 | | 1 | ELBOW NIPPLE | RACCORD COUDE<br>NIPPLO GOMITO<br>WINKELSTUTZEN<br>CODO DE UNION |
| 8* | **70921885** | 8 | 1 | O RING | JOINT TORIQUE<br>GIUNTO DI TENUTA<br>O-RING<br>JUNTA TOROIDAL |
| 9* | 932036 | 3/16" X 1-1/2 | 8 | SPLIT PIN | GOUPILLE FENDUE<br>COPIGLIA<br>SPALTBOLZEN<br>PASADOR HENDIDO |
| 10* | 526929 | ➡| ...<br>👁 40-75 No 1 | 1 | HYDRAULIC, CYLIN | VERIN HYDRAULI.<br>CILINDRO IDRAULI<br>HYDRAULIK ZYLIND<br>CILINDRO IDRAULI |
| 10* | 700724409 | ➡ ...<br>👁 40-75 No 1 | 1 | HYDRAULIC, CYLIN | VERIN HYDRAULI.<br>CILINDRO IDRAULI<br>HYDRAULIK ZYLIND<br>CILINDRO IDRAULI |
| 11* | N15148 | 1" X 3 | 3 | CLEVIS PIN | AXE<br>PERNO D'ATTACCO<br>SPLINTBOLZEN<br>BULON CILINDRICO |
| 12* | W247969B | 1" X 3-3/8 | 2 | PIN | GOUPILLE<br>COPPIGLIA<br>STIFT<br>PASADOR |
| 13* | 70923905 | | 2 | ELBOW NIPPLE | RACCORD COUDE<br>NIPPLO GOMITO<br>WINKELSTUTZEN<br>CODO DE UNION |
| 13* | **7037781** | 13 | 1 | O RING | JOINT TORIQUE<br>GIUNTO DI TENUTA<br>O-RING<br>JUNTA TOROIDAL |
| 14* | **7037781** | | X | O RING | JOINT TORIQUE<br>GIUNTO DI TENUTA<br>O-RING<br>JUNTA TOROIDAL |
| 15* | 854985 | 👁 40-70 No 1 | 1 | HYDRAULIC, CYLIN | VERIN HYDRAULI.<br>CILINDRO IDRAULI<br>HYDRAULIK ZYLIND<br>CILINDRO IDRAULI |
| 16* | 851472 | ◀▶ 196" | 1 | HYDRAULIC HOSE | DURITE HYDRAULIC<br>TUBO HYDRAULICO<br>HYDRAUL.SCHLAUCH<br>TUBO HYDRAULICO |

**Wheel Lift Hydraulic**
**Relevage Hydraulique De Roue**
**Räder Hydraulischer**
**Sollevatore Idraulico Di Ruota**
**Elevador Hidráulico De Rueda**

**40-25**

**8 Narrow Rows - Right Side**
**8 Rangs Etroits - Cote Droit**
**8 Enge Reihen - Rechte Seite**
**8 Lineas Stretti - Lato Destro**
**8 Lineas Estrechos - Lado Derecho**

5-PM07-005-A

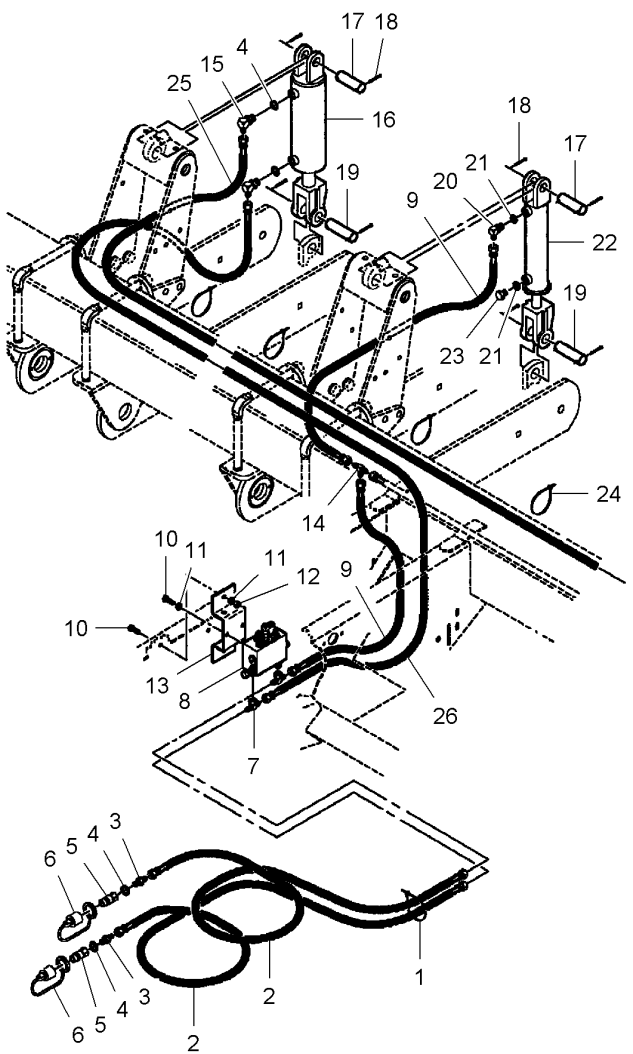


| | | | | | |
|---|---|---|---|---|---|
| 1* | 7724347 | | 7 | CABLE TIE | ATTACHE CABLE<br>FASCETTA CAVI<br>APRIETACABLES |
| 2* | 851835 | ◄► 106" | 2 | HYDRAULIC HOSE | DURITE HYDRAULIC<br>TUBO HYDRAULICO<br>HYDRAUL.SCHLAUCH<br>TUBO HYDRAULICO |
| 3* | 360202X91 | | 2 | UNION | RACCORD<br>RACCORDO<br>VERSCHRAUBUNG<br>RACOR |
| 3* | **7037781** | 3 | 1 | O RING | JOINT TORIQUE<br>GIUNTO DI TENUTA<br>O-RING<br>JUNTA TOROIDAL |
| 4* | **7037781** | | X | O RING | JOINT TORIQUE<br>GIUNTO DI TENUTA<br>O-RING<br>JUNTA TOROIDAL |
| 5* | 700703886 | | 2 | MALE COUPLER | COUPLEUR MALE<br>GIUNTO MASCHIO<br>KUPPLST.INNEN<br>ACOPLADOR MACHO |
| 6* | **737016** | | 2 | PLUG | BOUCHON<br>TAPPO<br>STOPFEN<br>TAPON |
| 7* | 70921014 | | 2 | TEEPIECE | TE<br>RACCORDO A T<br>T-STUECK<br>PIEZA EN T |
| 8* | N851998 | 👁 40-65 No 1 | 1 | VALVE | SOUPAPE<br>VALVOLA<br>VENTIL<br>VALVULA |
| 9* | 851465 | ◄► 41" | 2 | HYDRAULIC HOSE | DURITE HYDRAULIC<br>TUBO HYDRAULICO<br>HYDRAUL.SCHLAUCH<br>TUBO HYDRAULICO |
| 10* | 70921210 | 3/8"-16 X 1 | 4 | BOLT UNC | BOULON UNC<br>BULLONE UNC<br>MASCH.SCHRB.UNC<br>PERNO UNC |
| 11* | 70916965 | 3/8" | 4 | LOCK WASHER | RONDELLE FREIN<br>RONDELLA ARRESTO<br>SICHERUNGSRING<br>ARANDELA SEGURID |
| 12* | **70916950** | 3/8"-16 | 2 | NUT UNC | ECROU UNC<br>DADO UNC<br>MUTTER UNC<br>TUERCA UNC |
| 13* | 853853 | | 1 | BRACKET | SUPPORT FIXATION<br>STAFFETTA<br>HALTEARM<br>SOPORTE |
| 14* | 70919087 | | 1 | TEEPIECE | TE<br>RACCORDO A T<br>T-STUECK<br>PIEZA EN T |
| 15* | 70923905 | | 2 | ELBOW NIPPLE | RACCORD COUDE<br>NIPPLO GOMITO<br>WINKELSTUTZEN<br>CODO DE UNION |
| 15* | **7037781** | 15 | 1 | O RING | JOINT TORIQUE<br>GIUNTO DI TENUTA<br>O-RING<br>JUNTA TOROIDAL |
| 16* | 854984 | 👁 40-70 No 1 | 1 | HYDRAULIC, CYLIN | VERIN HYDRAULI.<br>CILINDRO IDRAULI<br>HYDRAULIK ZYLIND<br>CILINDRO IDRAULI |
| 17* | N15148 | 1" X 3 | 2 | CLEVIS PIN | AXE<br>PERNO D'ATTACCO<br>SPLINTBOLZEN<br>BULON CILINDRICO |
| 18* | 932036 | 3/16" X 1-1/2 | 8 | SPLIT PIN | GOUPILLE FENDUE<br>COPIGLIA<br>SPALTBOLZEN<br>PASADOR HENDIDO |
| 19* | W247969B | 1" X 3-3/8 | 2 | PIN | GOUPILLE<br>COPPIGLIA<br>STIFT<br>PASADOR |
| 20* | 70922523 | | 1 | ELBOW NIPPLE | RACCORD COUDE<br>NIPPLO GOMITO<br>WINKELSTUTZEN<br>CODO DE UNION |
| 20* | **70921885** | 20 | 1 | O RING | JOINT TORIQUE<br>GIUNTO DI TENUTA<br>O-RING<br>JUNTA TOROIDAL |
| 21* | **70921885** | | X | O RING | JOINT TORIQUE<br>GIUNTO DI TENUTA<br>O-RING<br>JUNTA TOROIDAL |
| 22* | 526929 | ➡| ...<br>👁 40-75 No 1 | 1 | HYDRAULIC, CYLIN | VERIN HYDRAULI.<br>CILINDRO IDRAULI<br>HYDRAULIK ZYLIND<br>CILINDRO IDRAULI |
| 22* | 700724409 | ➡ ...<br>👁 40-75 No 1 | 1 | HYDRAULIC, CYLIN | VERIN HYDRAULI.<br>CILINDRO IDRAULI<br>HYDRAULIK ZYLIND<br>CILINDRO IDRAULI |

| Wheel Lift Hydraulic<br>Relevage Hydraulique De Roue<br>Räder Hydraulischer<br>Sollevatore Idraulico Di Ruota<br>Elevador Hidráulico De Rueda | 40-25 | 8 Narrow Rows - Right Side<br>8 Rangs Etroits - Cote Droit<br>8 Enge Reihen - Rechte Seite<br>8 Lineas Stretti - Lato Destro<br>8 Lineas Estrechos - Lado Derecho |
|---|---|---|

5-PM07-005-A

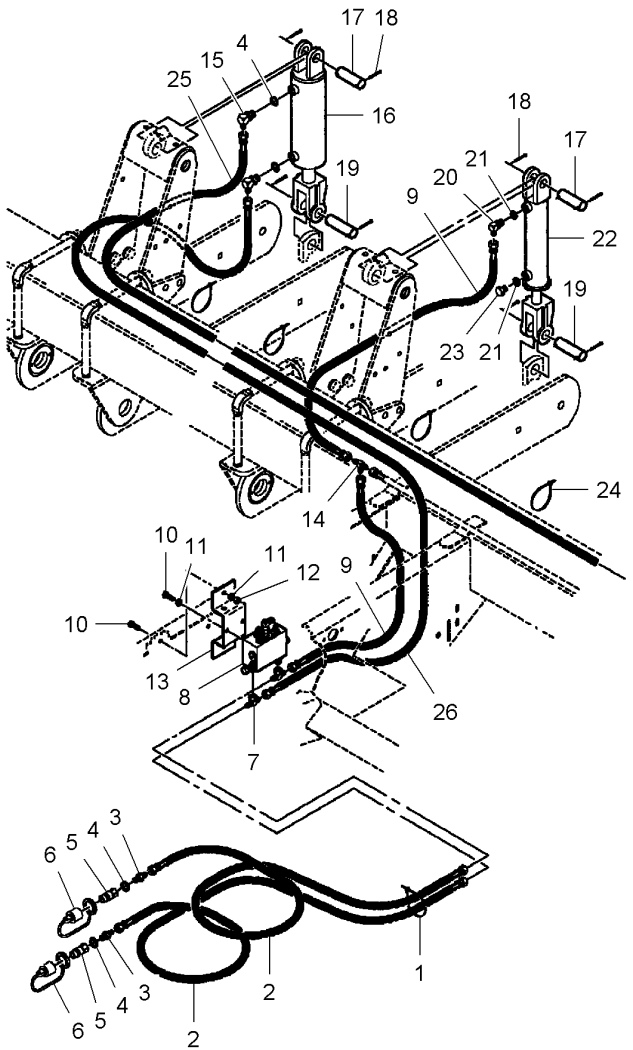


| | | | | | |
|---|---|---|---|---|---|
| 23* | **854835** | 9/16"-18 | **1** PLUG | BOUCHON<br>TAPPO | STOPFEN<br>TAPON |
| 23* | **70921885** | 23 | **1** O RING | JOINT TORIQUE<br>GIUNTO DI TENUTA | O-RING<br>JUNTA TOROIDAL |
| 24* | 70937133 | | **7** CABLE TIE | ATTACHE CABLE<br>FASCETTA CAVI | KABELBINDER<br>APRIETACABLES |
| 25* | 851472 | ◀▶ 196" | **1** HYDRAULIC HOSE | DURITE HYDRAULIC<br>TUBO HYDRAULICO | HYDRAUL.SCHLAUCH<br>TUBO HYDRAULICO |
| 26* | 851471 | ◀▶ 135" | **1** HYDRAULIC HOSE | DURITE HYDRAULIC<br>TUBO HYDRAULICO | HYDRAUL.SCHLAUCH<br>TUBO HYDRAULICO |

**Wheel Lift Hydraulic**
**Relevage Hydraulique De Roue**
**Räder Hydraulischer**
**Sollevatore Idraulico Di Ruota**
**Elevador Hidráulico De Rueda**

**40-30**

**8 Wide Rows - Left Side**
**8 Rangs Larges - Cote Gauche**
**8 Breite Reihen - Linke Seite**
**8 Lineas Larga - Lato Sinistro**
**8 Lineas Ancha - Lado Izquierdo**

5-PM07-006-A

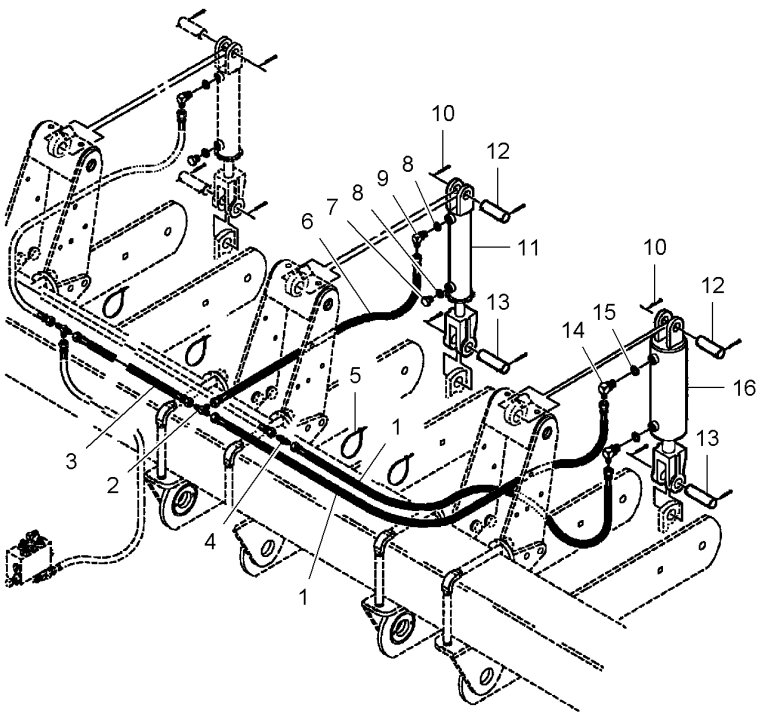


| | | | | | |
|---|---|---|---|---|---|
| 1* | 852472 | ◀▶ 95" | **2** | HYDRAULIC HOSE | DURITE HYDRAULIC<br>TUBO HYDRAULICO |
| 2* | 70919087 | | **1** | TEEPIECE | TE<br>RACCORDO A T |
| 3* | 851332 | ◀▶ 38" | **1** | HYDRAULIC HOSE | DURITE HYDRAULIC<br>TUBO HYDRAULICO |
| 4* | 846477 | | **1** | UNION | RACCORD<br>RACCORDO |
| 5* | 70937133 | | **7** | CABLE TIE | ATTACHE CABLE<br>FASCETTA CAVI |
| 6* | 852470 | ◀▶ 17"-1/2 | **1** | HYDRAULIC HOSE | DURITE HYDRAULIC<br>TUBO HYDRAULICO |
| 7* | **854835** | 9/16"-18 | **1** | PLUG | BOUCHON<br>TAPPO |
| 7* | **70921885** | 7 | **1** | O RING | JOINT TORIQUE<br>GIUNTO DI TENUTA |
| 8* | **70921885** | | **X** | O RING | JOINT TORIQUE<br>GIUNTO DI TENUTA |
| 9* | 70922523 | | **1** | ELBOW NIPPLE | RACCORD COUDE<br>NIPPLO GOMITO |
| 9* | **70921885** | 9 | **1** | O RING | JOINT TORIQUE<br>GIUNTO DI TENUTA |
| 10* | 932036 | 3/16" X 1-1/2 | **8** | SPLIT PIN | GOUPILLE FENDUE<br>COPIGLIA |
| 11* | 526929 | ➡| ...<br>👁 40-75 No 1 | **1** | HYDRAULIC, CYLIN | VERIN HYDRAULI.<br>CILINDRO IDRAULI |
| 11* | 700724409 | ➡ ...<br>👁 40-75 No 1 | **1** | HYDRAULIC, CYLIN | VERIN HYDRAULI.<br>CILINDRO IDRAULI |
| 12* | N15148 | 1" X 3 | **3** | CLEVIS PIN | AXE<br>PERNO D'ATTACCO |
| 13* | W247969B | 1" X 3-3/8 | **2** | PIN | GOUPILLE<br>COPPIGLIA |
| 14* | 70923905 | | **2** | ELBOW NIPPLE | RACCORD COUDE<br>NIPPLO GOMITO |
| 14* | **7037781** | 14 | **1** | O RING | JOINT TORIQUE<br>GIUNTO DI TENUTA |
| 15* | **7037781** | | **X** | O RING | JOINT TORIQUE<br>GIUNTO DI TENUTA |
| 16* | 854985 | 👁 40-70 No 1 | **1** | HYDRAULIC, CYLIN | VERIN HYDRAULI.<br>CILINDRO IDRAULI |

HYDRAUL.SCHLAUCH
TUBO HYDRAULICO
T-STUECK
PIEZA EN T
HYDRAUL.SCHLAUCH
TUBO HYDRAULICO
VERSCHRAUBUNG
RACOR
KABELBINDER
APRIETACABLES
HYDRAUL.SCHLAUCH
TUBO HYDRAULICO
STOPFEN
TAPON
O-RING
JUNTA TOROIDAL
O-RING
JUNTA TOROIDAL
WINKELSTUTZEN
CODO DE UNION
O-RING
JUNTA TOROIDAL
SPALTBOLZEN
PASADOR HENDIDO
HYDRAULIK ZYLIND
CILINDRO IDRAULI
HYDRAULIK ZYLIND
CILINDRO IDRAULI
SPLINTBOLZEN
BULON CILINDRICO
STIFT
PASADOR
WINKELSTUTZEN
CODO DE UNION
O-RING
JUNTA TOROIDAL
O-RING
JUNTA TOROIDAL
HYDRAULIK ZYLIND
CILINDRO IDRAULI

**Wheel Lift Hydraulic**
**Relevage Hydraulique De Roue**
**Räder Hydraulischer**
**Sollevatore Idraulico Di Ruota**
**Elevador Hidráulico De Rueda**

**40-35**

**8 Wide Rows - Right Side**
**8 Rangs Larges - Cote Droit**
**8 Breite Reihen - Rechte Seite**
**8 Lineas Larga - Lato Destro**
**8 Lineas Ancha - Lado Derecho**

5-PM07-007-A

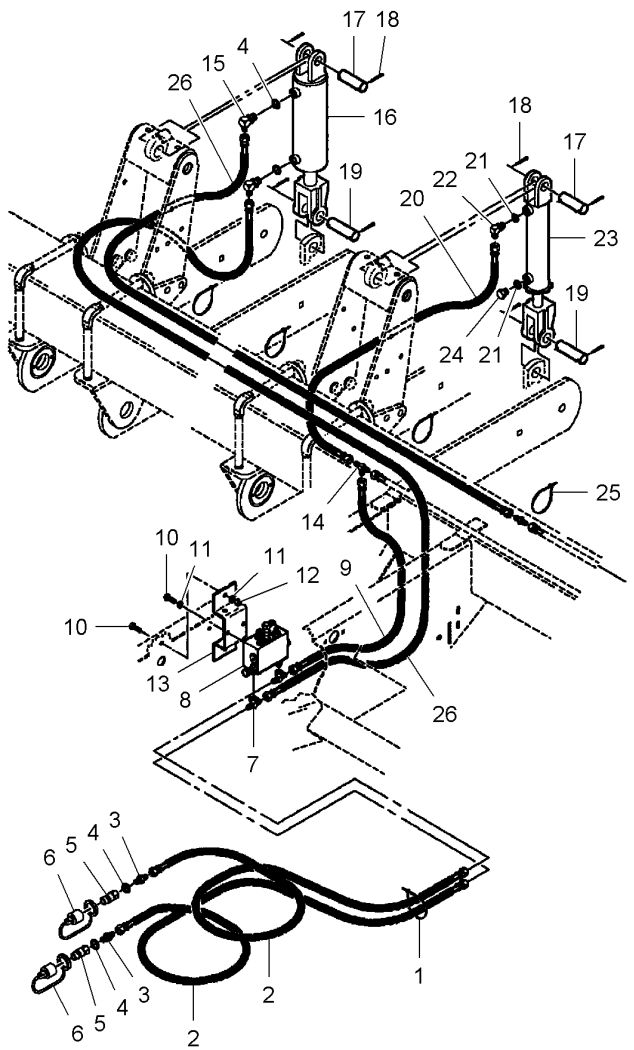


| | | | | | |
|---|---|---|---|---|---|
| 1* | 7724347 | | 7 | CABLE TIE | ATTACHE CABLE<br>FASCETTA CAVI<br>APRIETACABLES |
| 2* | 851835 | ◄► 106" | 2 | HYDRAULIC HOSE | DURITE HYDRAULIC<br>TUBO HYDRAULICO<br>HYDRAUL.SCHLAUCH<br>TUBO HYDRAULICO |
| 3* | 360202X91 | | 2 | UNION | RACCORD<br>RACCORDO<br>VERSCHRAUBUNG<br>RACOR |
| 3* | **7037781** | 3 | 1 | O RING | JOINT TORIQUE<br>GIUNTO DI TENUTA<br>O-RING<br>JUNTA TOROIDAL |
| 4* | **7037781** | | X | O RING | JOINT TORIQUE<br>GIUNTO DI TENUTA<br>O-RING<br>JUNTA TOROIDAL |
| 5* | 700703886 | | 2 | MALE COUPLER | COUPLEUR MALE<br>GIUNTO MASCHIO<br>KUPPLST.INNEN<br>ACOPLADOR MACHO |
| 6* | **737016** | | 2 | PLUG | BOUCHON<br>TAPPO<br>STOPFEN<br>TAPON |
| 7* | 70921014 | | 2 | TEEPIECE | TE<br>RACCORDO A T<br>T-STUECK<br>PIEZA EN T |
| 8* | N851998 | 👁 40-65 No 1 | 1 | VALVE | SOUPAPE<br>VALVOLA<br>VENTIL<br>VALVULA |
| 9* | 851465 | ◄► 41" | 1 | HYDRAULIC HOSE | DURITE HYDRAULIC<br>TUBO HYDRAULICO<br>HYDRAUL.SCHLAUCH<br>TUBO HYDRAULICO |
| 10* | 70921210 | 3/8"-16 X 1 | 4 | BOLT UNC | BOULON UNC<br>BULLONE UNC<br>MASCH.SCHRB.UNC<br>PERNO UNC |
| 11* | 70916965 | 3/8" | 4 | LOCK WASHER | RONDELLE FREIN<br>RONDELLA ARRESTO<br>SICHERUNGSRING<br>ARANDELA SEGURID |
| 12* | **70916950** | 3/8"-16 | 2 | NUT UNC | ECROU UNC<br>DADO UNC<br>MUTTER UNC<br>TUERCA UNC |
| 13* | 853853 | | 1 | BRACKET | SUPPORT FIXATION<br>STAFFETTA<br>HALTEARM<br>SOPORTE |
| 14* | 70919087 | | 1 | TEEPIECE | TE<br>RACCORDO A T<br>T-STUECK<br>PIEZA EN T |
| 15* | 70923905 | | 2 | ELBOW NIPPLE | RACCORD COUDE<br>NIPPLO GOMITO<br>WINKELSTUTZEN<br>CODO DE UNION |
| 15* | **7037781** | 15 | 1 | O RING | JOINT TORIQUE<br>GIUNTO DI TENUTA<br>O-RING<br>JUNTA TOROIDAL |
| 16* | 854984 | 👁 40-70 No 1 | 1 | HYDRAULIC, CYLIN | VERIN HYDRAULI.<br>CILINDRO IDRAULI<br>HYDRAULIK ZYLIND<br>CILINDRO IDRAULI |
| 17* | N15148 | 1" X 3 | 2 | CLEVIS PIN | AXE<br>PERNO D'ATTACCO<br>SPLINTBOLZEN<br>BULON CILINDRICO |
| 18* | 932036 | 3/16" X 1-1/2 | 8 | SPLIT PIN | GOUPILLE FENDUE<br>COPIGLIA<br>SPALTBOLZEN<br>PASADOR HENDIDO |
| 19* | W247969B | 1" X 3-3/8 | 2 | PIN | GOUPILLE<br>COPPIGLIA<br>STIFT<br>PASADOR |
| 20* | 851467 | ◄► 55" | 1 | HYDRAULIC HOSE | DURITE HYDRAULIC<br>TUBO HYDRAULICO<br>HYDRAUL.SCHLAUCH<br>TUBO HYDRAULICO |
| 21* | **70921885** | | X | O RING | JOINT TORIQUE<br>GIUNTO DI TENUTA<br>O-RING<br>JUNTA TOROIDAL |
| 22* | 70922523 | | 1 | ELBOW NIPPLE | RACCORD COUDE<br>NIPPLO GOMITO<br>WINKELSTUTZEN<br>CODO DE UNION |
| 22* | **70921885** | 22 | 1 | O RING | JOINT TORIQUE<br>GIUNTO DI TENUTA<br>O-RING<br>JUNTA TOROIDAL |
| 23* | 526929 | ➡| ...<br>👁 40-75 No 1 | 1 | HYDRAULIC, CYLIN | VERIN HYDRAULI.<br>CILINDRO IDRAULI<br>HYDRAULIK ZYLIND<br>CILINDRO IDRAULI |

| Wheel Lift Hydraulic<br>Relevage Hydraulique De Roue<br>Räder Hydraulischer<br>Sollevatore Idraulico Di Ruota<br>Elevador Hidráulico De Rueda | 40-35 | 8 Wide Rows - Right Side<br>8 Rangs Larges - Cote Droit<br>8 Breite Reihen - Rechte Seite<br>8 Lineas Larga - Lato Destro<br>8 Lineas Ancha - Lado Derecho |
|---|---|---|

5-PM07-007-A

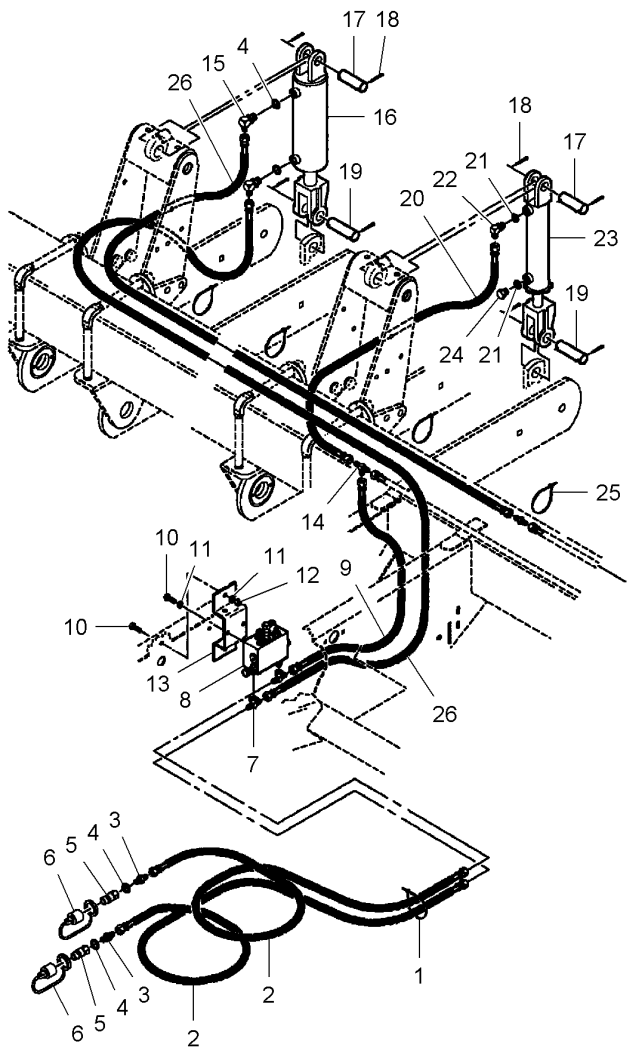


| | | | | | |
|---|---|---|---|---|---|
| 23* | 700724409 | ➡ ...<br>👁 40-75 No 1 | 1 | HYDRAULIC, CYLIN | VERIN HYDRAULI.<br>CILINDRO IDRAULI | HYDRAULIK ZYLIND<br>CILINDRO IDRAULI |
| 24* | **854835** | 9/16"-18 | 1 | PLUG | BOUCHON<br>TAPPO | STOPFEN<br>TAPON |
| 24* | **70921885** | 24 | 1 | O RING | JOINT TORIQUE<br>GIUNTO DI TENUTA | O-RING<br>JUNTA TOROIDAL |
| 25* | 70937133 | | 7 | CABLE TIE | ATTACHE CABLE<br>FASCETTA CAVI | KABELBINDER<br>APRIETACABLES |
| 26* | N852533 | ◀▶ 169" | 2 | HYDRAULIC HOSE | DURITE HYDRAULIC<br>TUBO HYDRAULICO | HYDRAUL.SCHLAUCH<br>TUBO HYDRAULICO |

**Wheel Lift Hydraulic**
**Relevage Hydraulique De Roue**
**Räder Hydraulischer**
**Sollevatore Idraulico Di Ruota**
**Elevador Hidráulico De Rueda**

**40-40**

**12 Narrow Rows - Left Side**
**12 Rangs Etroits - Cote Gauche**
**12 Enge Reihen - Linke Seite**
**12 Lineas Stretti - Lato Sinistro**
**12 Lineas Estrechos - Lado Izquierdo**

5-PM07-008-A

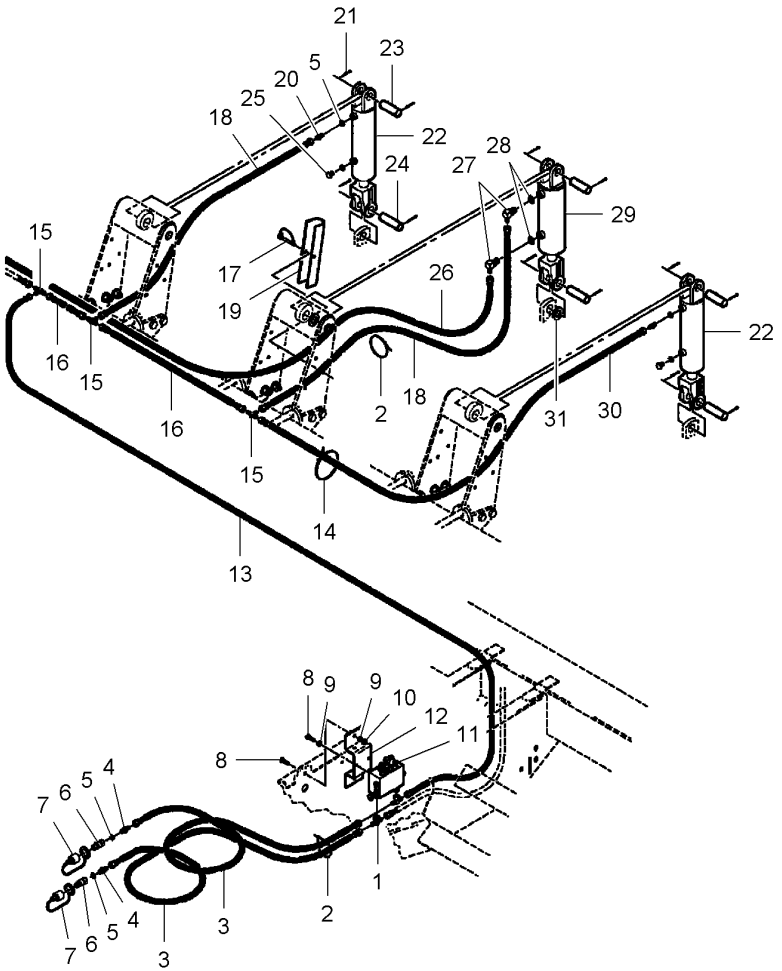


| | | | | | |
|---|---|---|---|---|---|
| 1* | 70921014 | | 2 TEEPIECE | TE<br>RACCORDO A T | T-STUECK<br>PIEZA EN T |
| 2* | 7724347 | | 11 CABLE TIE | ATTACHE CABLE<br>FASCETTA CAVI | KABELBINDER<br>APRIETACABLES |
| 3* | 851835 | ◀▶ 106" | 2 HYDRAULIC HOSE | DURITE HYDRAULIC<br>TUBO HYDRAULICO | HYDRAUL.SCHLAUCH<br>TUBO HYDRAULICO |
| 4* | 360202X91 | | 2 UNION | RACCORD<br>RACCORDO | VERSCHRAUBUNG<br>RACOR |
| 4* | **70921885** | 4 | 1 O RING | JOINT TORIQUE<br>GIUNTO DI TENUTA | O-RING<br>JUNTA TOROIDAL |
| 5* | **70921885** | | X O RING | JOINT TORIQUE<br>GIUNTO DI TENUTA | O-RING<br>JUNTA TOROIDAL |
| 6* | 700703886 | | 2 MALE COUPLER | COUPLEUR MALE<br>GIUNTO MASCHIO | KUPPLST.INNEN<br>ACOPLADOR MACHO |
| 7* | **737016** | | 2 PLUG | BOUCHON<br>TAPPO | STOPFEN<br>TAPON |
| 8* | 70921210 | 3/8"-16 X 1 | 4 BOLT UNC | BOULON UNC<br>BULLONE UNC | MASCH.SCHRB.UNC<br>PERNO UNC |
| 9* | 70916965 | 3/8" | 4 LOCK WASHER | RONDELLE FREIN<br>RONDELLA ARRESTO | SICHERUNGSRING<br>ARANDELA SEGURID |
| 10* | **70916950** | 3/8"-16 | 2 NUT UNC | ECROU UNC<br>DADO UNC | MUTTER UNC<br>TUERCA UNC |
| 11* | N851998 | 👁 40-65 No 1 | 1 VALVE | SOUPAPE<br>VALVOLA | VENTIL<br>VALVULA |
| 12* | 853853 | | 1 BRACKET | SUPPORT FIXATION<br>STAFFETTA | HALTEARM<br>SOPORTE |
| 13* | 851465 | ◀▶ 41" | 1 HYDRAULIC HOSE | DURITE HYDRAULIC<br>TUBO HYDRAULICO | HYDRAUL.SCHLAUCH<br>TUBO HYDRAULICO |
| 14* | 70937133 | | 10 CABLE TIE | ATTACHE CABLE<br>FASCETTA CAVI | KABELBINDER<br>APRIETACABLES |
| 15* | 70919087 | | 3 TEEPIECE | TE<br>RACCORDO A T | T-STUECK<br>PIEZA EN T |
| 16* | 851331 | ◀▶ 32" | 2 HYDRAULIC HOSE | DURITE HYDRAULIC<br>TUBO HYDRAULICO | HYDRAUL.SCHLAUCH<br>TUBO HYDRAULICO |
| 17* | W245430B | | 1 CLIP | PATTE D'ATTACHE<br>FERMAGLIO | SCHELLE<br>CLIP |
| 18* | 851330 | ◀▶ 14" | 2 HYDRAULIC HOSE | DURITE HYDRAULIC<br>TUBO HYDRAULICO | HYDRAUL.SCHLAUCH<br>TUBO HYDRAULICO |
| 19* | 851778 | | 1 ARM | BRAS<br>BRACCIO | SCHARHEBEL<br>BRAZO |
| 20* | 846634 | | 2 UNION | RACCORD<br>RACCORDO | VERSCHRAUBUNG<br>RACOR |
| 20* | **70921885** | 20 | 1 O RING | JOINT TORIQUE<br>GIUNTO DI TENUTA | O-RING<br>JUNTA TOROIDAL |
| 21* | 932036 | 3/16" X 1-1/2 | 12 SPLIT PIN | GOUPILLE FENDUE<br>COPIGLIA | SPALTBOLZEN<br>PASADOR HENDIDO |
| 22* | 526929 | ➡| ...<br>👁 40-75 No 1 | 2 HYDRAULIC, CYLIN | VERIN HYDRAULI.<br>CILINDRO IDRAULI | HYDRAULIK ZYLIND<br>CILINDRO IDRAULI |
| 22* | 700724409 | ➡ ...<br>👁 40-75 No 1 | 2 HYDRAULIC, CYLIN | VERIN HYDRAULI.<br>CILINDRO IDRAULI | HYDRAULIK ZYLIND<br>CILINDRO IDRAULI |
| 23* | N15148 | 1" X 3 | 3 CLEVIS PIN | AXE<br>PERNO D'ATTACCO | SPLINTBOLZEN<br>BULON CILINDRICO |

**Wheel Lift Hydraulic**
**Relevage Hydraulique De Roue**
**Räder Hydraulischer**
**Sollevatore Idraulico Di Ruota**
**Elevador Hidráulico De Rueda**

**40-40**

**12 Narrow Rows - Left Side**
**12 Rangs Etroits - Cote Gauche**
**12 Enge Reihen - Linke Seite**
**12 Lineas Stretti - Lato Sinistro**
**12 Lineas Estrechos - Lado Izquierdo**

5-PM07-008-A

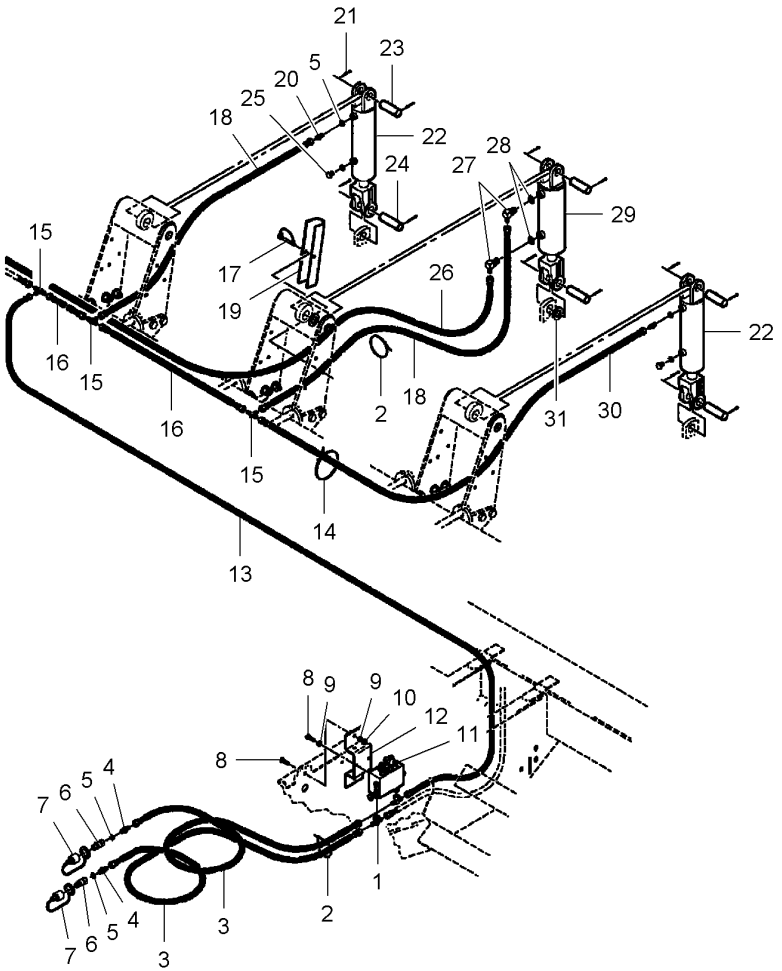


| | | | | | |
|---|---|---|---|---|---|
| 24* | W247969B | 1" X -3-3/8 | **3** PIN | GOUPILLE<br>COPPIGLIA | STIFT<br>PASADOR |
| 25* | **854835** | | **2** PLUG | BOUCHON<br>TAPPO | STOPFEN<br>TAPON |
| 25* | **70921885** | 25 | **1** O RING | JOINT TORIQUE<br>GIUNTO DI TENUTA | O-RING<br>JUNTA TOROIDAL |
| 26* | 851471 | ◀▶ 135" | **1** HYDRAULIC HOSE | DURITE HYDRAULIC<br>TUBO HYDRAULICO | HYDRAUL.SCHLAUCH<br>TUBO HYDRAULICO |
| 27* | 70923905 | | **1** ELBOW NIPPLE | RACCORD COUDE<br>NIPPLO GOMITO | WINKELSTUTZEN<br>CODO DE UNION |
| 27* | **7037781** | 27 | **1** O RING | JOINT TORIQUE<br>GIUNTO DI TENUTA | O-RING<br>JUNTA TOROIDAL |
| 28* | **7037781** | | **X** O RING | JOINT TORIQUE<br>GIUNTO DI TENUTA | O-RING<br>JUNTA TOROIDAL |
| 29* | 854985 | 40-70 No 1 | **1** HYDRAULIC, CYLIN | VERIN HYDRAULI.<br>CILINDRO IDRAULI | HYDRAULIK ZYLIND<br>CILINDRO IDRAULI |
| 30* | 851459 | ◀▶ 100" | **1** HYDRAULIC HOSE | DURITE HYDRAULIC<br>TUBO HYDRAULICO | HYDRAUL.SCHLAUCH<br>TUBO HYDRAULICO |
| 31* | 17714 | | **2** WASHER | RONDELLE<br>RONDELLA | SCHEIBE<br>ARANDELA |

**Wheel Lift Hydraulic**
**Relevage Hydraulique De Roue**
**Räder Hydraulischer**
**Sollevatore Idraulico Di Ruota**
**Elevador Hidráulico De Rueda**

**40-45**

**12 Narrow Rows - Right Side**
**12 Rangs Etroits - Cote Droit**
**12 Enge Reihen - Rechte Seite**
**12 Lineas Stretti - Lato Destro**
**12 Lineas Estrechos - Lado Derecho**

5-PM07-009-A

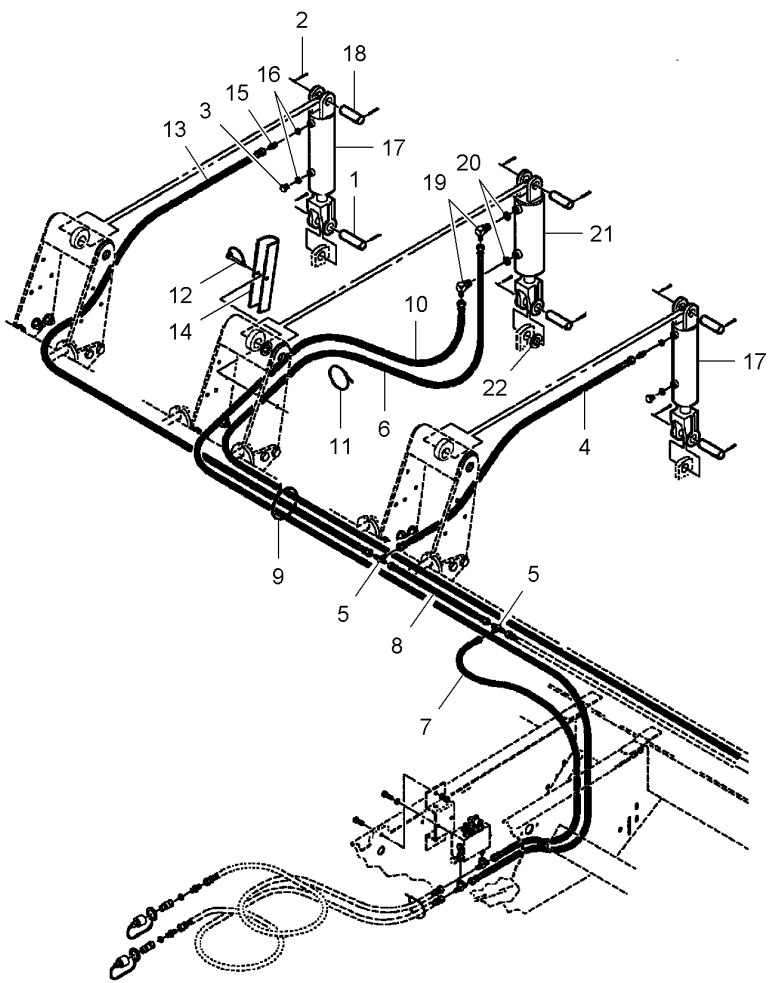


| | | | | | |
|---|---|---|---|---|---|
| 1* | W247969B | 1" X 3-3/8 | 3 | PIN | GOUPILLE<br>COPPIGLIA<br>STIFT<br>PASADOR |
| 2* | 932036 | 3/16" X 1-1/2 | 12 | SPLIT PIN | GOUPILLE FENDUE<br>COPIGLIA<br>SPALTBOLZEN<br>PASADOR HENDIDO |
| 3* | **854835** | | 2 | PLUG | BOUCHON<br>TAPPO<br>STOPFEN<br>TAPON |
| 3* | **70921885** | 3 | 1 | O RING | JOINT TORIQUE<br>GIUNTO DI TENUTA<br>O-RING<br>JUNTA TOROIDAL |
| 4* | 851330 | ◀▶ 14" | 1 | HYDRAULIC HOSE | DURITE HYDRAULIC<br>TUBO HYDRAULICO<br>HYDRAUL.SCHLAUCH<br>TUBO HYDRAULICO |
| 5* | 70919087 | | 2 | TEEPIECE | TE<br>RACCORDO A T<br>T-STUECK<br>PIEZA EN T |
| 6* | 851471 | ◀▶ 135" | 1 | HYDRAULIC HOSE | DURITE HYDRAULIC<br>TUBO HYDRAULICO<br>HYDRAUL.SCHLAUCH<br>TUBO HYDRAULICO |
| 7* | 851465 | ◀▶ 41" | 1 | HYDRAULIC HOSE | DURITE HYDRAULIC<br>TUBO HYDRAULICO<br>HYDRAUL.SCHLAUCH<br>TUBO HYDRAULICO |
| 8* | 851331 | ◀▶ 32" | 1 | HYDRAULIC HOSE | DURITE HYDRAULIC<br>TUBO HYDRAULICO<br>HYDRAUL.SCHLAUCH<br>TUBO HYDRAULICO |
| 9* | 70937133 | | 10 | CABLE TIE | ATTACHE CABLE<br>FASCETTA CAVI<br>KABELBINDER<br>APRIETACABLES |
| 10* | 851835 | ◀▶ 106" | 1 | HYDRAULIC HOSE | DURITE HYDRAULIC<br>TUBO HYDRAULICO<br>HYDRAUL.SCHLAUCH<br>TUBO HYDRAULICO |
| 11* | 7724347 | | 10 | CABLE TIE | ATTACHE CABLE<br>FASCETTA CAVI<br>KABELBINDER<br>APRIETACABLES |
| 12* | W245430B | | 1 | CLIP | PATTE D'ATTACHE<br>FERMAGLIO<br>SCHELLE<br>CLIP |
| 13* | 851460 | ◀▶ 129" | 1 | HYDRAULIC HOSE | DURITE HYDRAULIC<br>TUBO HYDRAULICO<br>HYDRAUL.SCHLAUCH<br>TUBO HYDRAULICO |
| 14* | 851778 | | 1 | ARM | BRAS<br>BRACCIO<br>SCHARHEBEL<br>BRAZO |
| 15* | 846634 | | 2 | UNION | RACCORD<br>RACCORDO<br>VERSCHRAUBUNG<br>RACOR |
| 15* | **70921885** | 15 | 1 | O RING | JOINT TORIQUE<br>GIUNTO DI TENUTA<br>O-RING<br>JUNTA TOROIDAL |
| 16* | **70921885** | | X | O RING | JOINT TORIQUE<br>GIUNTO DI TENUTA<br>O-RING<br>JUNTA TOROIDAL |
| 17* | 526929 | ➡ ...<br>👁 40-75 No 1 | 2 | HYDRAULIC, CYLIN | VERIN HYDRAULI.<br>CILINDRO IDRAULI<br>HYDRAULIK ZYLIND<br>CILINDRO IDRAULI |
| 17* | 700724409 | ➡ ...<br>👁 40-75 No 1 | 2 | HYDRAULIC, CYLIN | VERIN HYDRAULI.<br>CILINDRO IDRAULI<br>HYDRAULIK ZYLIND<br>CILINDRO IDRAULI |
| 18* | N15148 | 1" X 3 | 3 | CLEVIS PIN | AXE<br>PERNO D'ATTACCO<br>SPLINTBOLZEN<br>BULON CILINDRICO |
| 19* | 70923905 | | 2 | ELBOW NIPPLE | RACCORD COUDE<br>NIPPLO GOMITO<br>WINKELSTUTZEN<br>CODO DE UNION |
| 19* | **7037781** | 19 | 1 | O RING | JOINT TORIQUE<br>GIUNTO DI TENUTA<br>O-RING<br>JUNTA TOROIDAL |
| 20* | **7037781** | | X | O RING | JOINT TORIQUE<br>GIUNTO DI TENUTA<br>O-RING<br>JUNTA TOROIDAL |
| 21* | 854984 | 👁 40-70 No 1 | 1 | HYDRAULIC, CYLIN | VERIN HYDRAULI.<br>CILINDRO IDRAULI<br>HYDRAULIK ZYLIND<br>CILINDRO IDRAULI |
| 22* | 17714 | | 2 | WASHER | RONDELLE<br>RONDELLA<br>SCHEIBE<br>ARANDELA |

| | | | |
|---|---|---|---|
| **Wheel Lift Hydraulic**<br>**Relevage Hydraulique De Roue**<br>**Räder Hydraulischer**<br>**Sollevatore Idraulico Di Ruota**<br>**Elevador Hidráulico De Rueda** | **Vertical Fold Frame**<br>**Châssis Rabattable**<br>**Falte Rahmen**<br>**Telaio Ribaltabile**<br>**Bastidor Abatible** | **40-50** | **8 Rows Narrow**<br>**8 Rangs Etroits**<br>**8 Schmal Reihes**<br>**8 Lineas Stretta**<br>**8 Lineas Estrecho** |

5-PM08-001-A

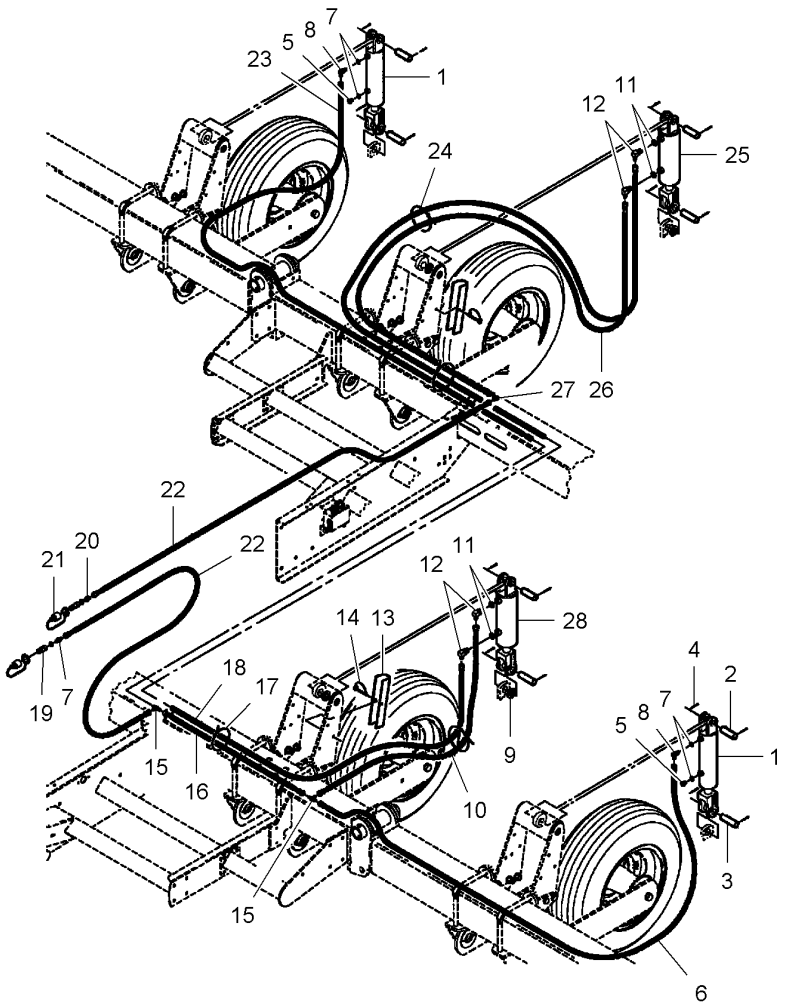


| | | | | | |
|---|---|---|---|---|---|
| 1* | 526929 | ➡ ...<br>👁 40-75 No 1 | **2** HYDRAULIC, CYLIN | VERIN HYDRAULI.<br>CILINDRO IDRAULI | HYDRAULIK ZYLIND<br>CILINDRO IDRAULI |
| 1* | 700724409 | ➡ ...<br>👁 40-75 No 1 | **2** HYDRAULIC, CYLIN | VERIN HYDRAULI.<br>CILINDRO IDRAULI | HYDRAULIK ZYLIND<br>CILINDRO IDRAULI |
| 2* | N15148 | 1" X 3 | **7** CLEVIS PIN | AXE<br>PERNO D'ATTACCO | SPLINTBOLZEN<br>BULON CILINDRICO |
| 3* | W247969B | 1" X 3-3/8 | **5** PIN | GOUPILLE<br>COPPIGLIA | STIFT<br>PASADOR |
| 4* | 932036 | 3/16" X 1-1/2 | **16** SPLIT PIN | GOUPILLE FENDUE<br>COPIGLIA | SPALTBOLZEN<br>PASADOR HENDIDO |
| 5* | **854835** | | **2** PLUG | BOUCHON<br>TAPPO | STOPFEN<br>TAPON |
| 5* | **70921885** | 58 | **1** O RING | JOINT TORIQUE<br>GIUNTO DI TENUTA | O-RING<br>JUNTA TOROIDAL |
| 6* | 851832 | ◀▶ 74" | **1** HYDRAULIC HOSE | DURITE HYDRAULIC<br>TUBO HYDRAULICO | HYDRAUL.SCHLAUCH<br>TUBO HYDRAULICO |
| 7* | **70921885** | | **X** O RING | JOINT TORIQUE<br>GIUNTO DI TENUTA | O-RING<br>JUNTA TOROIDAL |
| 8* | 70922523 | | **2** ELBOW NIPPLE | RACCORD COUDE<br>NIPPLO GOMITO | WINKELSTUTZEN<br>CODO DE UNION |
| 8* | **70921885** | 8 | **1** O RING | JOINT TORIQUE<br>GIUNTO DI TENUTA | O-RING<br>JUNTA TOROIDAL |
| 9* | 17714 | | **4** WASHER | RONDELLE<br>RONDELLA | SCHEIBE<br>ARANDELA |
| 10* | 851330 | ◀▶ 14" | **1** HYDRAULIC HOSE | DURITE HYDRAULIC<br>TUBO HYDRAULICO | HYDRAUL.SCHLAUCH<br>TUBO HYDRAULICO |
| 11* | **7037781** | | **X** O RING | JOINT TORIQUE<br>GIUNTO DI TENUTA | O-RING<br>JUNTA TOROIDAL |
| 12* | 70923905 | | **2** ELBOW NIPPLE | RACCORD COUDE<br>NIPPLO GOMITO | WINKELSTUTZEN<br>CODO DE UNION |
| 12* | **7037781** | 12 | **1** O RING | JOINT TORIQUE<br>GIUNTO DI TENUTA | O-RING<br>JUNTA TOROIDAL |
| 13* | 851778 | | **2** ARM | BRAS<br>BRACCIO | SCHARHEBEL<br>BRAZO |
| 14* | W245430B | | **2** CLIP | PATTE D'ATTACHE<br>FERMAGLIO | SCHELLE<br>CLIP |
| 15* | 70919087 | | **2** TEEPIECE | TE<br>RACCORDO A T | T-STUECK<br>PIEZA EN T |
| 16* | 851331 | ◀▶ 32" | **1** HYDRAULIC HOSE | DURITE HYDRAULIC<br>TUBO HYDRAULICO | HYDRAUL.SCHLAUCH<br>TUBO HYDRAULICO |
| 17* | 7724347 | | **20** CABLE TIE | ATTACHE CABLE<br>FASCETTA CAVI | KABELBINDER<br>APRIETACABLES |
| 18* | 851470 | ◀▶ 98" | **1** HYDRAULIC HOSE | DURITE HYDRAULIC<br>TUBO HYDRAULICO | HYDRAUL.SCHLAUCH<br>TUBO HYDRAULICO |
| 19* | 700703886 | | **2** MALE COUPLER | COUPLEUR MALE<br>GIUNTO MASCHIO | KUPPLST.INNEN<br>ACOPLADOR MACHO |
| 20* | 360202X91 | | **2** UNION | RACCORD<br>RACCORDO | VERSCHRAUBUNG<br>RACOR |
| 20* | **7037781** | 20 | **1** O RING | JOINT TORIQUE<br>GIUNTO DI TENUTA | O-RING<br>JUNTA TOROIDAL |
| 21* | **737016** | | **2** PLUG | BOUCHON<br>TAPPO | STOPFEN<br>TAPON |

| | | | |
|---|---|---|---|
| **Wheel Lift Hydraulic**<br>**Relevage Hydraulique De Roue**<br>**Räder Hydraulischer**<br>**Sollevatore Idraulico Di Ruota**<br>**Elevador Hidráulico De Rueda** | **Vertical Fold Frame**<br>**Châssis Rabattable**<br>**Falte Rahmen**<br>**Telaio Ribaltabile**<br>**Bastidor Abatible** | **40-50** | **8 Rows Narrow**<br>**8 Rangs Etroits**<br>**8 Schmal Reihes**<br>**8 Lineas Stretta**<br>**8 Lineas Estrecho** |

5-PM08-001-A

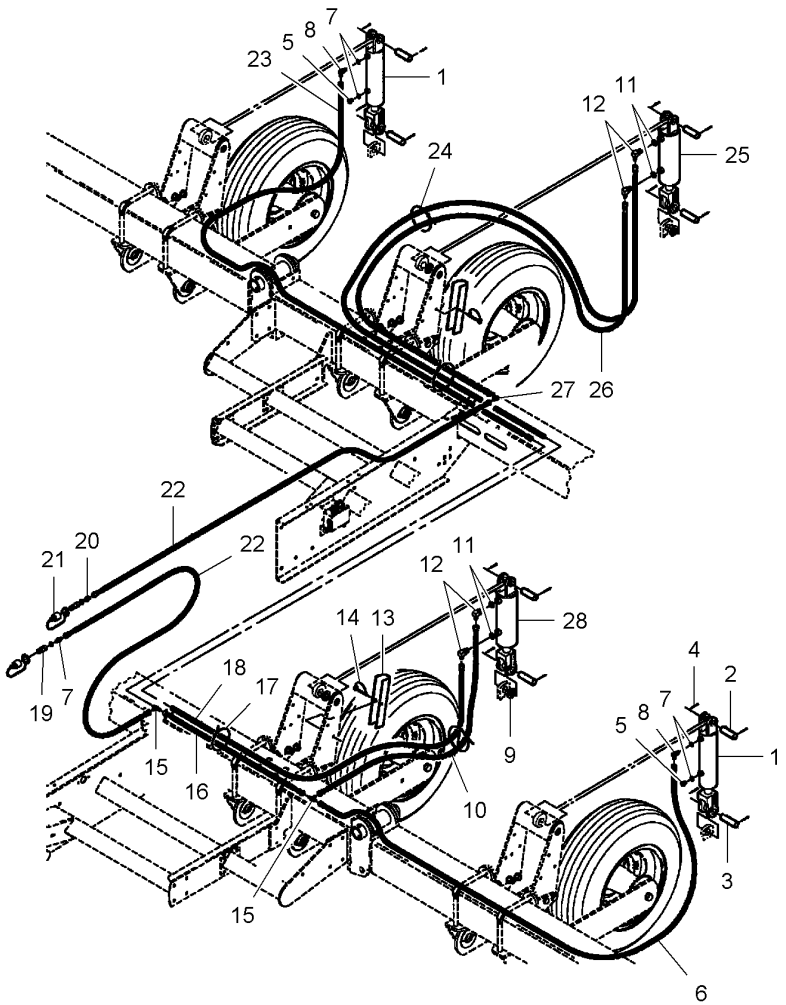


| | | | | | |
|---|---|---|---|---|---|
| 22* | 851471 | ◀▶ 135" | **2** | HYDRAULIC HOSE | DURITE HYDRAULIC<br>TUBO HYDRAULICO | HYDRAUL.SCHLAUCH<br>TUBO HYDRAULICO |
| 23* | 851835 | ◀▶ 106" | **1** | HYDRAULIC HOSE | DURITE HYDRAULIC<br>TUBO HYDRAULICO | HYDRAUL.SCHLAUCH<br>TUBO HYDRAULICO |
| 24* | 70937133 | | **16** | CABLE TIE | ATTACHE CABLE<br>FASCETTA CAVI | KABELBINDER<br>APRIETACABLES |
| 25* | 854984 | 40-70 No 1 | **1** | HYDRAULIC, CYLIN | VERIN HYDRAULI.<br>CILINDRO IDRAULI | HYDRAULIK ZYLIND<br>CILINDRO IDRAULI |
| 26* | 851465 | ◀▶ 41" | **1** | HYDRAULIC HOSE | DURITE HYDRAULIC<br>TUBO HYDRAULICO | HYDRAUL.SCHLAUCH<br>TUBO HYDRAULICO |
| 27* | 70919131 | | **1** | ELBOW NIPPLE | RACCORD COUDE<br>NIPPLO GOMITO | WINKELSTUTZEN<br>CODO DE UNION |
| 28* | 854985 | 40-70 No 1 | **1** | HYDRAULIC, CYLIN | VERIN HYDRAULI.<br>CILINDRO IDRAULI | HYDRAULIK ZYLIND<br>CILINDRO IDRAULI |

| | | | |
|---|---|---|---|
| **Wheel Lift Hydraulic**<br>**Relevage Hydraulique De Roue**<br>**Räder Hydraulischer**<br>**Sollevatore Idraulico Di Ruota**<br>**Elevador Hidráulico De Rueda** | **Vertical Fold Frame**<br>**Châssis Rabattable**<br>**Falte Rahmen**<br>**Telaio Ribaltabile**<br>**Bastidor Abatible** | **40-55** | **12 Narrow Rows - Left Side**<br>**12 Rangs Etroits - Cote Gauche**<br>**12 Enge Reihen - Linke Seite**<br>**12 Lineas Stretti - Lato Sinistro**<br>**12 Lineas Estrechos - Lado Izquierdo** |

5-PM08-002-A

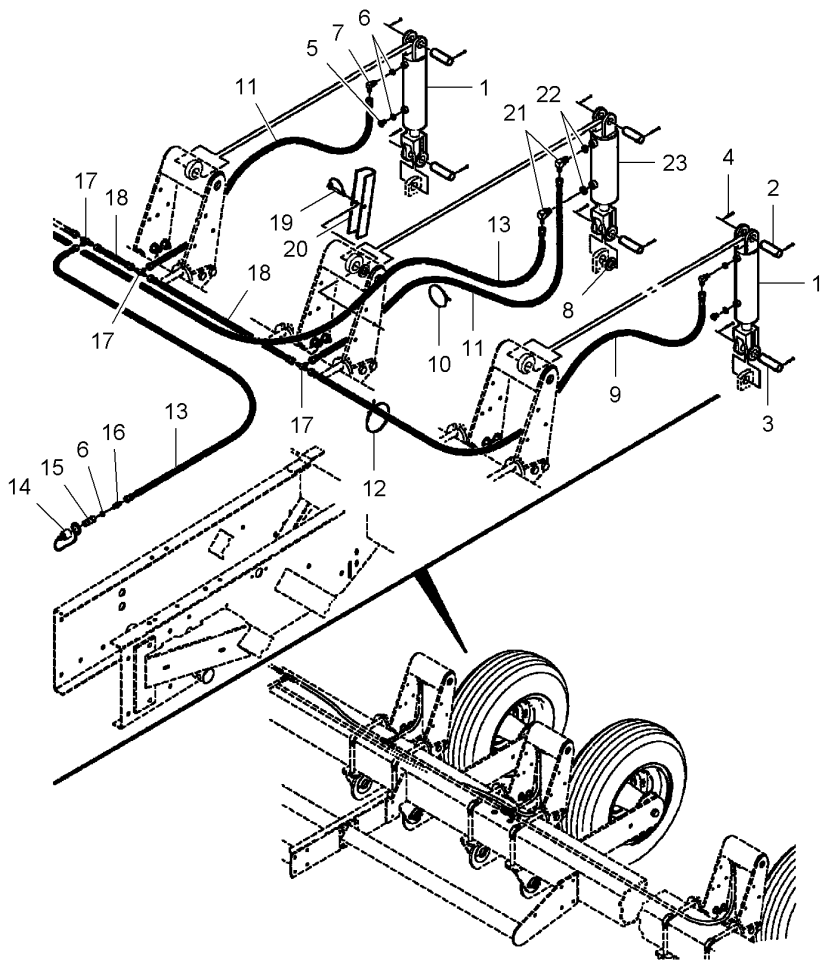


| | | | | | |
|---|---|---|---|---|---|
| 1* | 526929 | ➡ ...<br>👁 40-75 No 1 | **2** | HYDRAULIC, CYLIN | VERIN HYDRAULI.<br>CILINDRO IDRAULI | HYDRAULIK ZYLIND<br>CILINDRO IDRAULI |
| 1* | 700724409 | ➡ ...<br>👁 40-75 No 1 | **2** | HYDRAULIC, CYLIN | VERIN HYDRAULI.<br>CILINDRO IDRAULI | HYDRAULIK ZYLIND<br>CILINDRO IDRAULI |
| 2* | N15148 | 1" X 3 | **3** | CLEVIS PIN | AXE<br>PERNO D'ATTACCO | SPLINTBOLZEN<br>BULON CILINDRICO |
| 3* | W247969B | 1" X 3-3/8 | **3** | PIN | GOUPILLE<br>COPPIGLIA | STIFT<br>PASADOR |
| 4* | 932036 | 3/16" X 1-1/2 | **12** | SPLIT PIN | GOUPILLE FENDUE<br>COPIGLIA | SPALTBOLZEN<br>PASADOR HENDIDO |
| 5* | **854835** | | **2** | PLUG | BOUCHON<br>TAPPO | STOPFEN<br>TAPON |
| 5* | **70921885** | 5 | **1** | O RING | JOINT TORIQUE<br>GIUNTO DI TENUTA | O-RING<br>JUNTA TOROIDAL |
| 6* | **70921885** | | **X** | O RING | JOINT TORIQUE<br>GIUNTO DI TENUTA | O-RING<br>JUNTA TOROIDAL |
| 7* | 70922523 | | **2** | ELBOW NIPPLE | RACCORD COUDE<br>NIPPLO GOMITO | WINKELSTUTZEN<br>CODO DE UNION |
| 7* | **70921885** | 7 | **1** | O RING | JOINT TORIQUE<br>GIUNTO DI TENUTA | O-RING<br>JUNTA TOROIDAL |
| 8* | 17714 | | **2** | WASHER | RONDELLE<br>RONDELLA | SCHEIBE<br>ARANDELA |
| 9* | 851459 | ◀▶ 100" | **1** | HYDRAULIC HOSE | DURITE HYDRAULIC<br>TUBO HYDRAULICO | HYDRAUL.SCHLAUCH<br>TUBO HYDRAULICO |
| 10* | 7724347 | | **10** | CABLE TIE | ATTACHE CABLE<br>FASCETTA CAVI | KABELBINDER<br>APRIETACABLES |
| 11* | 851330 | ◀▶ 14" | **2** | HYDRAULIC HOSE | DURITE HYDRAULIC<br>TUBO HYDRAULICO | HYDRAUL.SCHLAUCH<br>TUBO HYDRAULICO |
| 12* | 70937133 | | **10** | CABLE TIE | ATTACHE CABLE<br>FASCETTA CAVI | KABELBINDER<br>APRIETACABLES |
| 13* | 851471 | ◀▶ 135" | **2** | HYDRAULIC HOSE | DURITE HYDRAULIC<br>TUBO HYDRAULICO | HYDRAUL.SCHLAUCH<br>TUBO HYDRAULICO |
| 14* | **737016** | | **1** | PLUG | BOUCHON<br>TAPPO | STOPFEN<br>TAPON |
| 15* | 700703886 | | **1** | MALE COUPLER | COUPLEUR MALE<br>GIUNTO MASCHIO | KUPPLST.INNEN<br>ACOPLADOR MACHO |
| 16* | 360202X91 | | **1** | UNION | RACCORD<br>RACCORDO | VERSCHRAUBUNG<br>RACOR |
| 16* | **70921885** | 16 | **1** | O RING | JOINT TORIQUE<br>GIUNTO DI TENUTA | O-RING<br>JUNTA TOROIDAL |
| 17* | 70919087 | | **3** | TEEPIECE | TE<br>RACCORDO A T | T-STUECK<br>PIEZA EN T |
| 18* | 851331 | ◀▶ 32" | **2** | HYDRAULIC HOSE | DURITE HYDRAULIC<br>TUBO HYDRAULICO | HYDRAUL.SCHLAUCH<br>TUBO HYDRAULICO |
| 19* | W245430B | | **1** | CLIP | PATTE D'ATTACHE<br>FERMAGLIO | SCHELLE<br>CLIP |
| 20* | 851778 | | **1** | ARM | BRAS<br>BRACCIO | SCHARHEBEL<br>BRAZO |
| 21* | 70923905 | | **2** | ELBOW NIPPLE | RACCORD COUDE<br>NIPPLO GOMITO | WINKELSTUTZEN<br>CODO DE UNION |
| 21* | **7037781** | 21 | **1** | O RING | JOINT TORIQUE<br>GIUNTO DI TENUTA | O-RING<br>JUNTA TOROIDAL |

| | | | |
|---|---|---|---|
| **Wheel Lift Hydraulic** | **Vertical Fold Frame** | **40-55** | **12 Narrow Rows - Left Side** |
| **Relevage Hydraulique De Roue** | **Châssis Rabattable** | | **12 Rangs Etroits - Cote Gauche** |
| **Räder Hydraulischer** | **Falte Rahmen** | | **12 Enge Reihen - Linke Seite** |
| **Sollevatore Idraulico Di Ruota** | **Telaio Ribaltabile** | | **12 Lineas Stretti - Lato Sinistro** |
| **Elevador Hidráulico De Rueda** | **Bastidor Abatible** | | **12 Lineas Estrechos - Lado Izquierdo** |

5-PM08-002-A

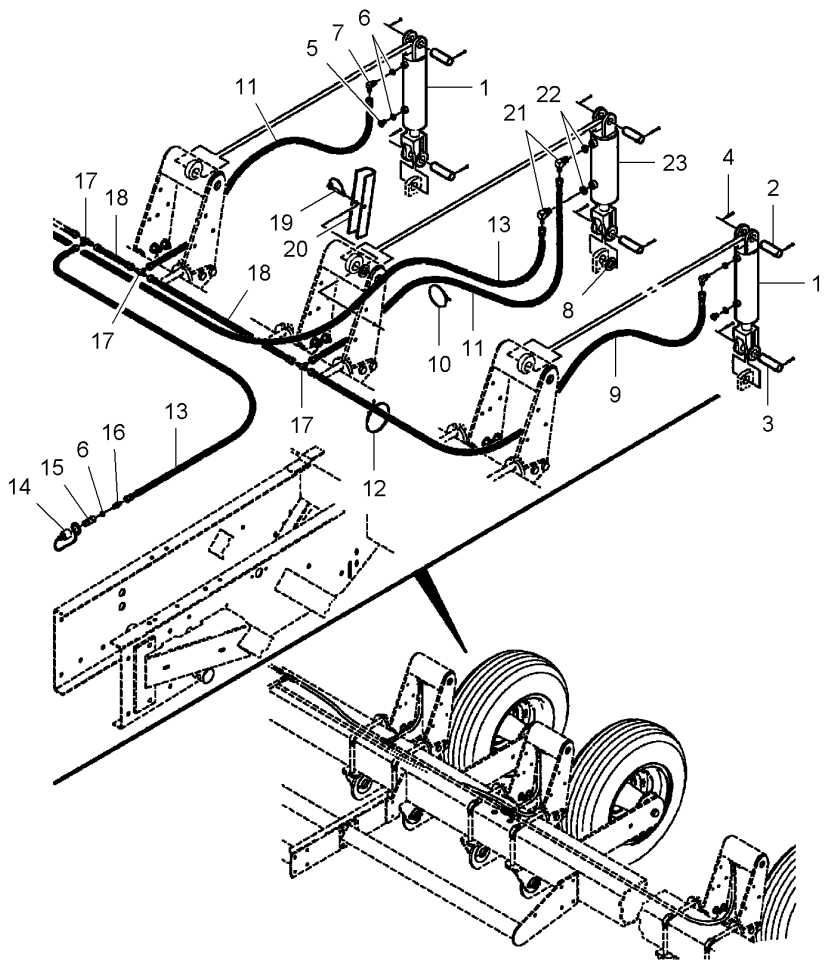


| | | | | | |
|---|---|---|---|---|---|
| 22* | **7037781** | | **X** O RING | JOINT TORIQUE<br>GIUNTO DI TENUTA | O-RING<br>JUNTA TOROIDAL |
| 23* | 854985 | 40-70 No 1 | **1** HYDRAULIC, CYLIN | VERIN HYDRAULI.<br>CILINDRO IDRAULI | HYDRAULIK ZYLIND<br>CILINDRO IDRAULI |

| | | |
|---|---|---|
| **Wheel Lift Hydraulic**<br>**Relevage Hydraulique De Roue**<br>**Räder Hydraulischer**<br>**Sollevatore Idraulico Di Ruota**<br>**Elevador Hidráulico De Rueda** | **Vertical Fold Frame**<br>**Châssis Rabattable**<br>**Falte Rahmen**<br>**Telaio Ribaltabile**<br>**Bastidor Abatible** | **40-60** |

**12 Narrow Rows - Right Side**
**12 Rangs Etroits - Cote Droit**
**12 Enge Reihen - Rechte Seite**
**12 Lineas Stretti - Lato Destro**
**12 Lineas Estrechos - Lado Derecho**

5-PM08-003-A

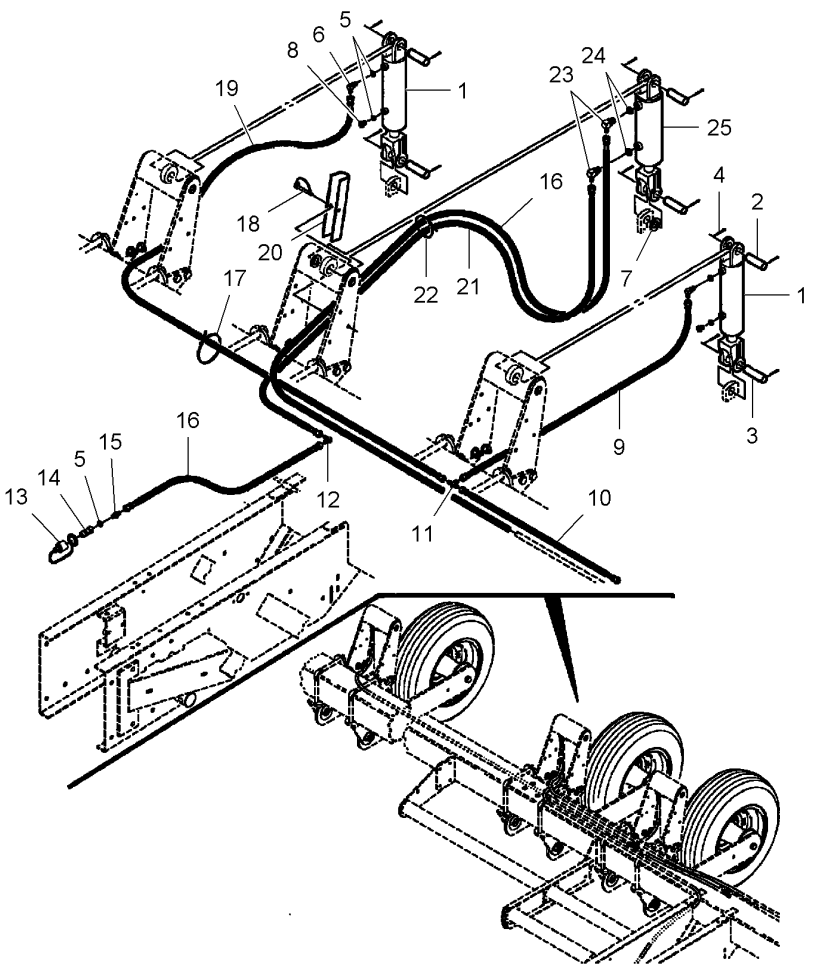


| | | | | | |
|---|---|---|---|---|---|
| 1* | 526929 | ➡ ...<br>👁 40-75 No 1 | **2** HYDRAULIC, CYLIN | VERIN HYDRAULI.<br>CILINDRO IDRAULI | HYDRAULIK ZYLIND<br>CILINDRO IDRAULI |
| 1* | 700724409 | ➡ ...<br>👁 40-75 No 1 | **2** HYDRAULIC, CYLIN | VERIN HYDRAULI.<br>CILINDRO IDRAULI | HYDRAULIK ZYLIND<br>CILINDRO IDRAULI |
| 2* | N15148 | 1" X 3 | **3** CLEVIS PIN | AXE<br>PERNO D'ATTACCO | SPLINTBOLZEN<br>BULON CILINDRICO |
| 3* | W247969B | 1" X 3-3/8 | **3** PIN | GOUPILLE<br>COPPIGLIA | STIFT<br>PASADOR |
| 4* | 932036 | 3/16" X 1-1/2 | **12** SPLIT PIN | GOUPILLE FENDUE<br>COPIGLIA | SPALTBOLZEN<br>PASADOR HENDIDO |
| 5* | **70921885** | | **X** O RING | JOINT TORIQUE<br>GIUNTO DI TENUTA | O-RING<br>JUNTA TOROIDAL |
| 6* | 70922523 | | **2** ELBOW NIPPLE | RACCORD COUDE<br>NIPPLO GOMITO | WINKELSTUTZEN<br>CODO DE UNION |
| 6* | **70921885** | 6 | **1** O RING | JOINT TORIQUE<br>GIUNTO DI TENUTA | O-RING<br>JUNTA TOROIDAL |
| 7* | 17714 | | **2** WASHER | RONDELLE<br>RONDELLA | SCHEIBE<br>ARANDELA |
| 8* | **854835** | | **2** PLUG | BOUCHON<br>TAPPO | STOPFEN<br>TAPON |
| 8* | **70921885** | 8 | **1** O RING | JOINT TORIQUE<br>GIUNTO DI TENUTA | O-RING<br>JUNTA TOROIDAL |
| 9* | 851330 | ◀▶ 14" | **1** HYDRAULIC HOSE | DURITE HYDRAULIC<br>TUBO HYDRAULICO | HYDRAUL.SCHLAUCH<br>TUBO HYDRAULICO |
| 10* | 851331 | ◀▶ 32" | **1** HYDRAULIC HOSE | DURITE HYDRAULIC<br>TUBO HYDRAULICO | HYDRAUL.SCHLAUCH<br>TUBO HYDRAULICO |
| 11* | 70919087 | | **1** TEEPIECE | TE<br>RACCORDO A T | T-STUECK<br>PIEZA EN T |
| 12* | 70919131 | | **1** ELBOW NIPPLE | RACCORD COUDE<br>NIPPLO GOMITO | WINKELSTUTZEN<br>CODO DE UNION |
| 13* | **737016** | | **1** PLUG | BOUCHON<br>TAPPO | STOPFEN<br>TAPON |
| 14* | 700703886 | | **1** MALE COUPLER | COUPLEUR MALE<br>GIUNTO MASCHIO | KUPPLST.INNEN<br>ACOPLADOR MACHO |
| 15* | 360202X91 | | **1** UNION | RACCORD<br>RACCORDO | VERSCHRAUBUNG<br>RACOR |
| 15* | **70921885** | 15 | **1** O RING | JOINT TORIQUE<br>GIUNTO DI TENUTA | O-RING<br>JUNTA TOROIDAL |
| 16* | 851471 | ◀▶ 135" | **2** HYDRAULIC HOSE | DURITE HYDRAULIC<br>TUBO HYDRAULICO | HYDRAUL.SCHLAUCH<br>TUBO HYDRAULICO |
| 17* | 70937133 | | **10** CABLE TIE | ATTACHE CABLE<br>FASCETTA CAVI | KABELBINDER<br>APRIETACABLES |
| 18* | W245430B | | **1** CLIP | PATTE D'ATTACHE<br>FERMAGLIO | SCHELLE<br>CLIP |
| 19* | 851460 | ◀▶ 129" | **1** HYDRAULIC HOSE | DURITE HYDRAULIC<br>TUBO HYDRAULICO | HYDRAUL.SCHLAUCH<br>TUBO HYDRAULICO |
| 20* | 851778 | | **1** ARM | BRAS<br>BRACCIO | SCHARHEBEL<br>BRAZO |
| 21* | 851832 | ◀▶ 74" | **1** HYDRAULIC HOSE | DURITE HYDRAULIC<br>TUBO HYDRAULICO | HYDRAUL.SCHLAUCH<br>TUBO HYDRAULICO |
| 22* | 7724347 | | **10** CABLE TIE | ATTACHE CABLE<br>FASCETTA CAVI | KABELBINDER<br>APRIETACABLES |

| | | | |
|---|---|---|---|
| **Wheel Lift Hydraulic** | **Vertical Fold Frame** | **40-60** | **12 Narrow Rows - Right Side** |
| **Relevage Hydraulique De Roue** | **Châssis Rabattable** | | **12 Rangs Etroits - Cote Droit** |
| **Räder Hydraulischer** | **Falte Rahmen** | | **12 Enge Reihen - Rechte Seite** |
| **Sollevatore Idraulico Di Ruota** | **Telaio Ribaltabile** | | **12 Lineas Stretti - Lato Destro** |
| **Elevador Hidráulico De Rueda** | **Bastidor Abatible** | | **12 Lineas Estrechos - Lado Derecho** |

5-PM08-003-A

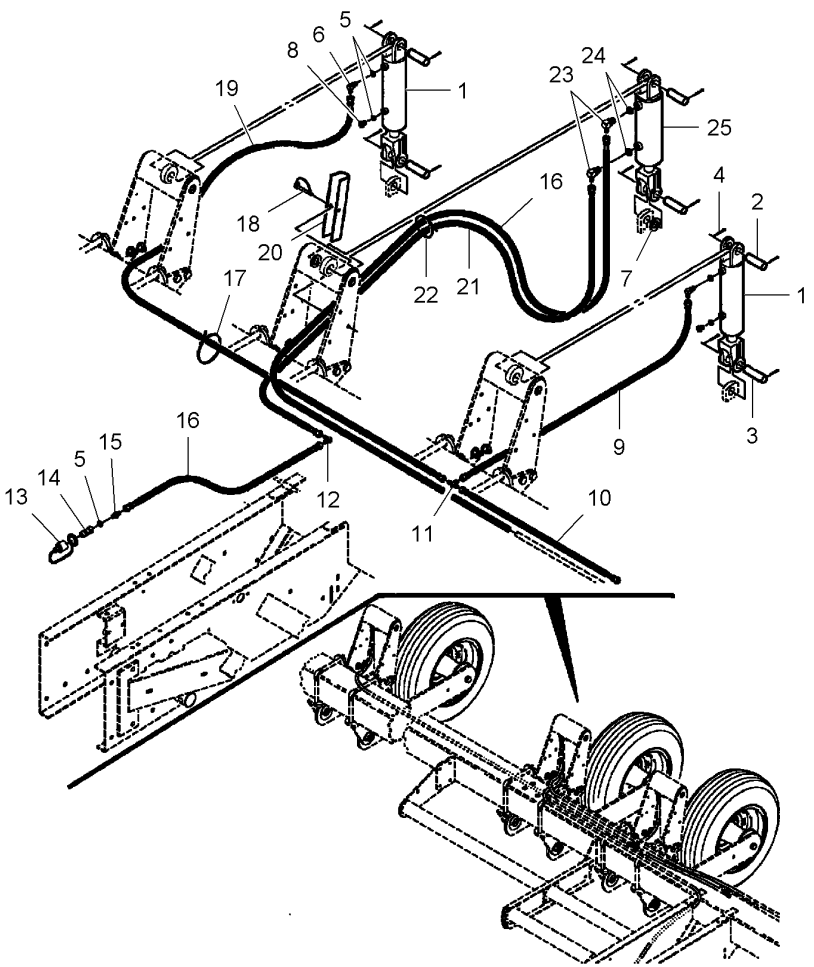


| | | | | | |
|---|---|---|---|---|---|
| 23* | 70923905 | | **2** ELBOW NIPPLE | RACCORD COUDE<br>NIPPLO GOMITO | WINKELSTUTZEN<br>CODO DE UNION |
| 23* | **7037781** | 23 | **1** O RING | JOINT TORIQUE<br>GIUNTO DI TENUTA | O-RING<br>JUNTA TOROIDAL |
| 24* | **7037781** | | **X** O RING | JOINT TORIQUE<br>GIUNTO DI TENUTA | O-RING<br>JUNTA TOROIDAL |
| 25* | 854984 | 40-70 No 1 | **1** HYDRAULIC, CYLIN | VERIN HYDRAULI.<br>CILINDRO IDRAULI | HYDRAULIK ZYLIND<br>CILINDRO IDRAULI |

**Valve**
**Soupape**
**Ventil**
**Valvola**
**Válvula**

**40-65**

5-PL36-002-B

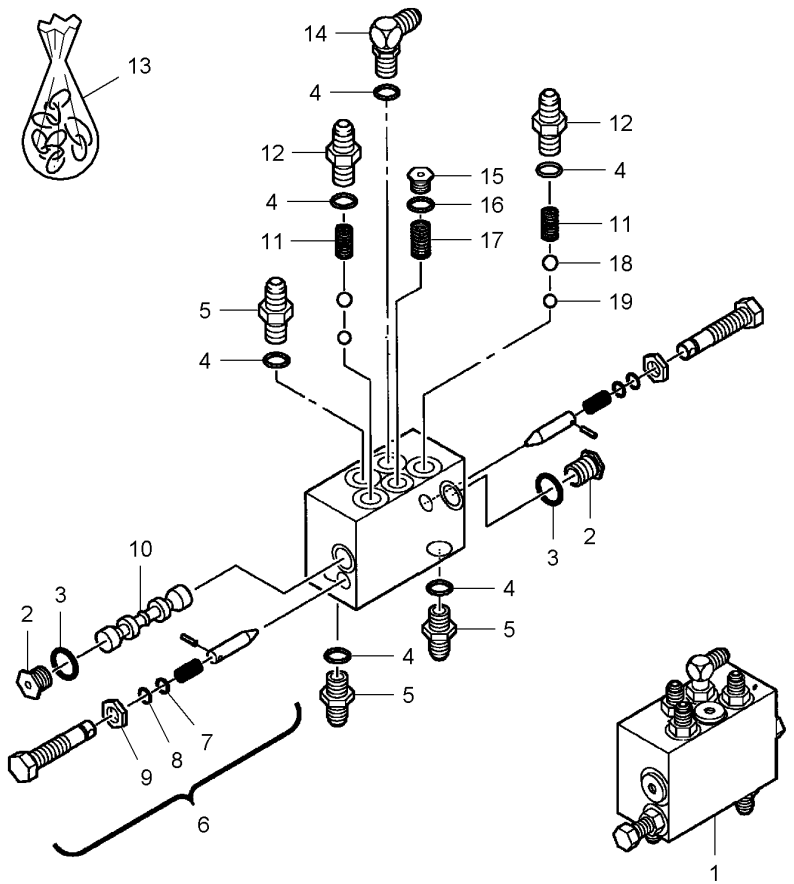


| | | | | | |
|---|---|---|---|---|---|
| 1* | N851998 | | **1** VALVE | SOUPAPE<br>VALVOLA | VENTIL<br>VALVULA |
| 2* | 852767 | 1 | **2** PLUG | BOUCHON<br>TAPPO | STOPFEN<br>TAPON |
| 2* | **7037781** | 2 | **1** O RING | JOINT TORIQUE<br>GIUNTO DI TENUTA | O-RING<br>JUNTA TOROIDAL |
| 3* | **7037781** | 1 | **X** O RING | JOINT TORIQUE<br>GIUNTO DI TENUTA | O-RING<br>JUNTA TOROIDAL |
| 4* | **70921885** | 1 | **X** O RING | JOINT TORIQUE<br>GIUNTO DI TENUTA | O-RING<br>JUNTA TOROIDAL |
| 5* | 846634 | 1 | **3** UNION | RACCORD<br>RACCORDO | VERSCHRAUBUNG<br>RACOR |
| 5* | **70921885** | 5 | **1** O RING | JOINT TORIQUE<br>GIUNTO DI TENUTA | O-RING<br>JUNTA TOROIDAL |
| 6* | 852768 | 1 | **2** CONTROL | CONTROLE<br>CONTROLLO | STEUERUNG<br>MANDO |
| 7* | **852773** | 6 | **1** O RING | JOINT TORIQUE<br>GIUNTO DI TENUTA | O-RING<br>JUNTA TOROIDAL |
| 8* | 852774 | 6 | **1** RING | ANNEAU<br>ANELLO | RING.<br>ANILLO |
| 9* | 7704000 | 6 | **1** NUT | ECROU<br>DADO | MUTTER<br>TUERCA |
| 10* | 853867 | 1 | **1** SPOOL | TIROIR<br>ROCCHETTO | STEUERSCHIEBER<br>CARRETE |
| 11* | W248405B | 1 | **2** SPRING | RESSORT<br>MOLLA | FEDER<br>MUELLE |
| 12* | 852765 | 1 | **2** ADAPTOR | ADAPTATEUR<br>ADATTATORE | REDUZIERNIPPEL<br>ADAPTADOR |
| 12* | **70921885** | 12 | **1** O RING | JOINT TORIQUE<br>GIUNTO DI TENUTA | O-RING<br>JUNTA TOROIDAL |
| 13* | **852771** | 1 | **1** KIT, SEAL | JEU ETANCHEITE<br>KIT TENUTA | DICHTRINGSATZ<br>RETENES JUEGO |
| 14* | 70922523 | 1 | **1** ELBOW NIPPLE | RACCORD COUDE<br>NIPPLO GOMITO | WINKELSTUTZEN<br>CODO DE UNION |
| 14* | **70921885** | 14 | **1** O RING | JOINT TORIQUE<br>GIUNTO DI TENUTA | O-RING<br>JUNTA TOROIDAL |
| 15* | 852766 | 1 | **1** PLUG | BOUCHON<br>TAPPO | STOPFEN<br>TAPON |
| 15* | **70921884** | 15 | **1** O RING | JOINT TORIQUE<br>GIUNTO DI TENUTA | O-RING<br>JUNTA TOROIDAL |
| 16* | **70921884** | 1 | **X** O RING | JOINT TORIQUE<br>GIUNTO DI TENUTA | O-RING<br>JUNTA TOROIDAL |
| 17* | N851188 | 1 | **1** SPRING | RESSORT<br>MOLLA | FEDER<br>MUELLE |
| 18* | 70917579 | 1 | **2** BALL | BILLE<br>SFERA | KUGEL<br>BOLA |
| 19* | 70921874 | 1 | **2** BALL | BILLE<br>SFERA | KUGEL<br>BOLA |

**Hydraulic Cylinder**
**Vérin Hydraulique**
**Hydraulikzylinder**
**Martinetto Idraulico**
**Gato Hidráulico**

**40-70**

5-PL37-001-B

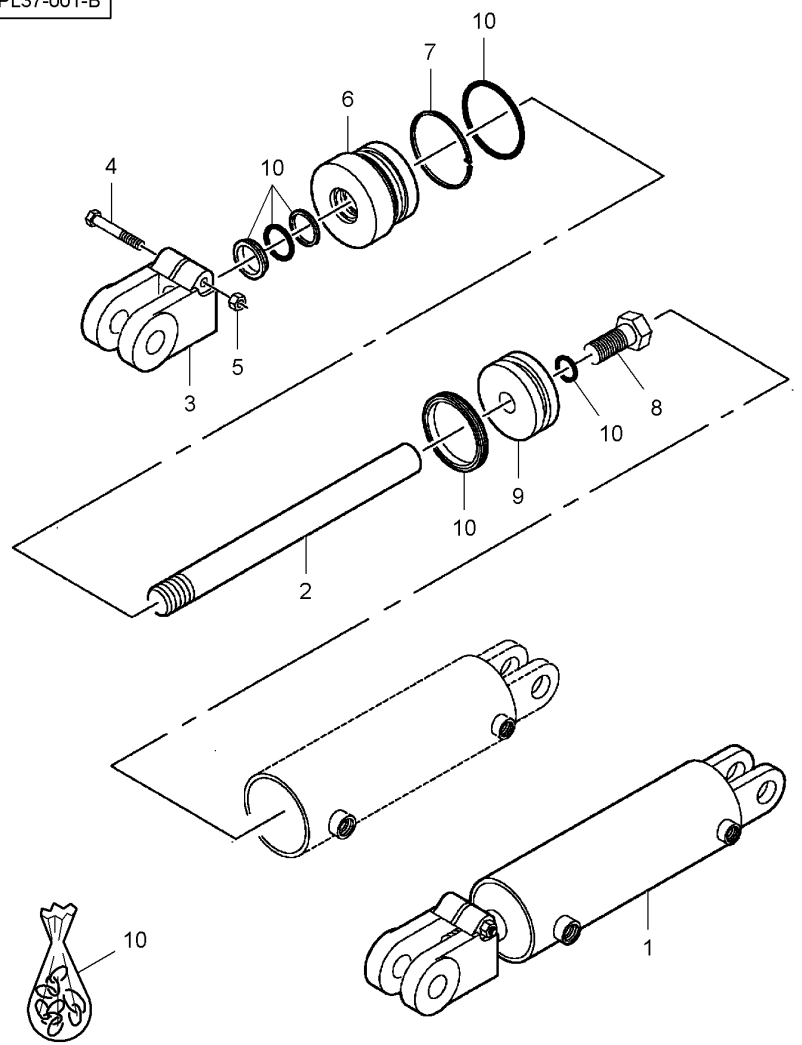


| | | | | | | |
|---|---|---|---|---|---|---|
| 1 | 854984 | | 3"-1/4 X 8 | **1** HYDRAULIC, CYLIN | VERIN HYDRAULI.<br>CILINDRO IDRAULI | HYDRAULIK ZYLIND<br>CILINDRO IDRAULI |
| 1 | 854985 | | 3"-1/2 X 8 | **1** HYDRAULIC, CYLIN | VERIN HYDRAULI.<br>CILINDRO IDRAULI | HYDRAULIK ZYLIND<br>CILINDRO IDRAULI |
| 2 | 854018 | 1 | 1"-1/4 | **1** ROD | TRINGLE<br>ASTA | STANGE<br>VARILLA |
| 3 | 854007 | 1 | | **1** CLEVIS | CHAPE<br>GANCIO D'ATTACCO | GABELSTUECK<br>GANCHO SEGURI. |
| 4* | **70921972** | 1 | 3/8"-16 X 2-1/2 | **1** BOLT UNC | BOULON UNC<br>BULLONE UNC | MASCH.SCHRB.UNC<br>PERNO UNC |
| 5* | **Y704635** | 1 | 3/8"-16 | **1** LOCKNUT | ECROU FREIN<br>AUTOBLOCCANTE | SICHERUNGSMUTTER<br>CONTRATUERCA |
| 6* | 854019 | 1 | [A] | **1** HEAD | TETE<br>TESTA | KOPF<br>CULATA |
| 6 | 854023 | 1 | [B] | **1** HEAD | TETE<br>TESTA | KOPF<br>CULATA |
| 7 | 854020 | 1 | [A] | **1** RING | ANNEAU<br>ANELLO | RING.<br>ANILLO |
| 7 | 854024 | 1 | [B] | **1** RING | ANNEAU<br>ANELLO | RING.<br>ANILLO |
| 8* | 700703384 | 1 | 7/8"-14 X 2 | **1** CAPSCREW | VIS BOUCHON<br>TAPPO A VITE | HUTSCHRAUBE<br>TORNILLO TAPON |
| 9 | 854017 | 1 | [A] | **1** PISTON | PISTON<br>PISTONE | KOLBEN<br>PISTON |
| 9 | 854022 | 1 | [B] | **1** PISTON | PISTON<br>PISTONE | KOLBEN<br>PISTON |
| 10* | **700723475** | 1 | [A] | **1** KIT, SEAL | JEU ETANCHEITE<br>KIT TENUTA | DICHTRINGSATZ<br>RETENES JUEGO |
| 10* | **700723476** | 1 | [B] | **1** KIT, SEAL | JEU ETANCHEITE<br>KIT TENUTA | DICHTRINGSATZ<br>RETENES JUEGO |

[A] INCLUDED IN 854984
COMPRIS DANS 854984
IN 854984
COMPRESO IN 854984
COMPRENDIDO EN 854984

[B] INCLUDED IN 854985
COMPRIS DANS 854985
IN 854985
COMPRENDIDO EN 854985
COMPRESO IN 854985

**Hydraulic Cylinder**
**Vérin Hydraulique**
**Hydraulikzylinder**
**Martinetto Idraulico**
**Gato Hidráulico**

**40-75**

5-PL37-002-B

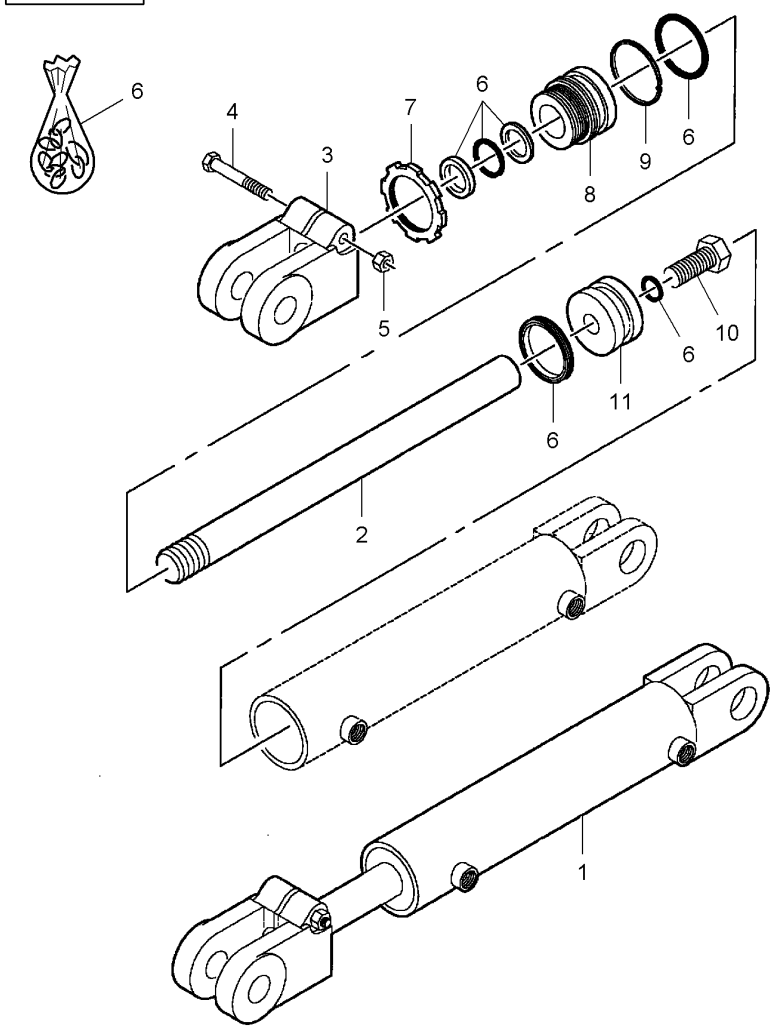


| | | | | | | |
|---|---|---|---|---|---|---|
| 1 | 526929 | ➡| ... | **1** | HYDRAULIC, CYLIN | VERIN HYDRAULI.<br>CILINDRO IDRAULI | HYDRAULIK ZYLIND<br>CILINDRO IDRAULI |
| 1* | 700724409 | ➡ ... | **1** | HYDRAULIC, CYLIN | VERIN HYDRAULI.<br>CILINDRO IDRAULI | HYDRAULIK ZYLIND<br>CILINDRO IDRAULI |
| 2* | 853452 | 1 [A] | **1** | ROD | TRINGLE<br>ASTA | STANGE<br>VARILLA |
| 2* | 700724411 | 1 [B] | **1** | ROD | TRINGLE<br>ASTA | STANGE<br>VARILLA |
| 3 | 853453 | 1 | **1** | CLEVIS | CHAPE<br>GANCIO D'ATTACCO | GABELSTUECK<br>GANCHO SEGURI. |
| 4* | **70921972** | 1 3/8"-16 X 2-1/2 | **1** | BOLT UNC | BOULON UNC<br>BULLONE UNC | MASCH.SCHRB.UNC<br>PERNO UNC |
| 5* | **Y704635** | 1 3/8"-16 | **1** | LOCKNUT | ECROU FREIN<br>AUTOBLOCCANTE | SICHERUNGSMUTTER<br>CONTRATUERCA |
| 6* | **700723483** | 1 [A] | **1** | KIT, SEAL | JEU ETANCHEITE<br>KIT TENUTA | DICHTRINGSATZ<br>RETENES JUEGO |
| 6* | **700723488** | 1 [B] | **1** | KIT, SEAL | JEU ETANCHEITE<br>KIT TENUTA | DICHTRINGSATZ<br>RETENES JUEGO |
| 7* | 853455 | 1 1"-1/2 | **1** | LOCKNUT | ECROU FREIN<br>AUTOBLOCCANTE | SICHERUNGSMUTTER<br>CONTRATUERCA |
| 8* | 853454 | 1 [A] | **1** | HEAD | TETE<br>TESTA | KOPF<br>CULATA |
| 8* | N855828 | 1 [B] | **1** | HEAD | TETE<br>TESTA | KOPF<br>CULATA |
| 9* | 853456 | 1 | **1** | RING | ANNEAU<br>ANELLO | RING.<br>ANILLO |
| 10* | 70923884 | 1 5/8"-18 X 1-1/2 | **1** | SCREW | VIS<br>VITE | SCHRAUBE<br>TORNILLO |
| 11* | 853451 | 1 [A] | **1** | PISTON | PISTON<br>PISTONE | KOLBEN<br>PISTON |
| 11* | N855829 | 1 [B] | **1** | PISTON | PISTON<br>PISTONE | KOLBEN<br>PISTON |

[A] INCLUDED IN 526929
COMPRIS DANS 526929
IN 526929
COMPRESO IN 526929
COMPRENDIDO EN 526929

[B] INCLUDED IN 700724409
COMPRIS DANS 700724409
IN 700724409
COMPRENDIDO EN 700724409
COMPRESO IN 700724409

| | | | |
|---|---|---|---|
| **Wing Lift Hydraulic** | **Vertical Fold Frame** | **40-80** | **8 & 12 Rows Narrow** |
| **Relevage Hydraulique Des Bords Externes** | **Châssis Rabattable** | | **8 & 12 Rangs Etroits** |
| **Scharklinge Hydraulischer** | **Falte Rahmen** | | **8 & 12 Schmal Reihes** |
| **Sollevatore Idraulico Di Bordi Esterni** | **Telaio Ribaltabile** | | **8 & 12 Lineas Stretta** |
| **Elevador Hidráulico De Bordes Externos** | **Bastidor Abatible** | | **8 & 12 Lineas Estrecho** |

5-PM09-001-A

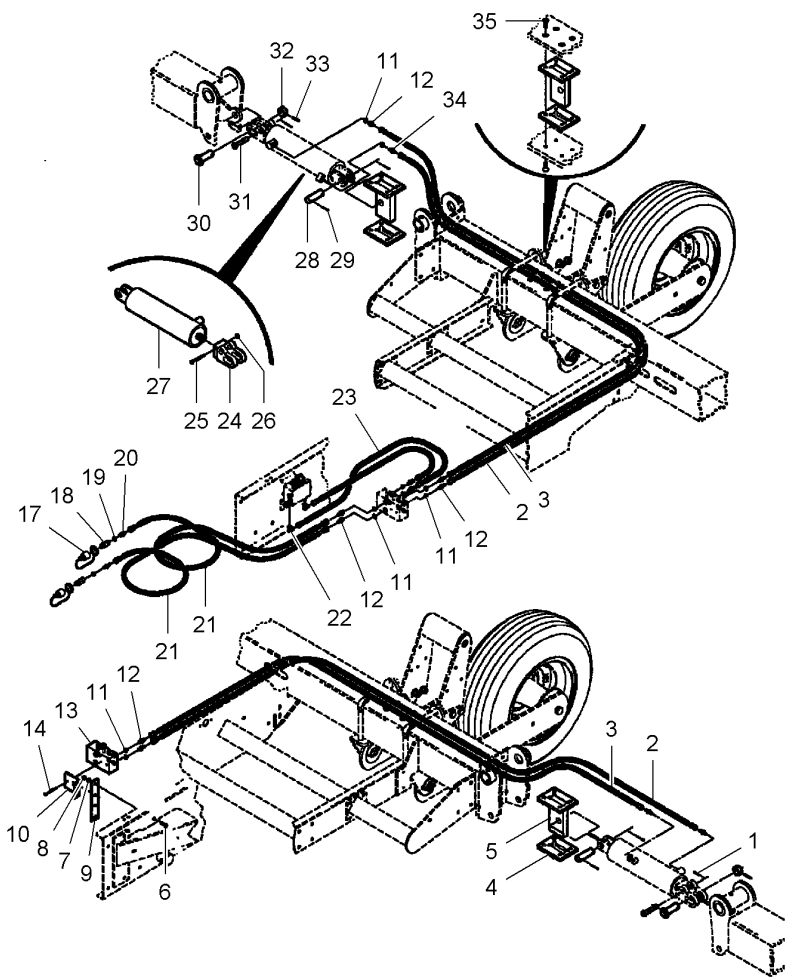


| | | | | | |
|---|---|---|---|---|---|
| 1* | 62232 | 3/16" X 1-1/4 | **2** | SPLIT PIN | GOUPILLE FENDUE<br>COPIGLIA<br>SPALTBOLZEN<br>PASADOR HENDIDO |
| 2* | 851469 | [A]<br>◀▶ 76" | **2** | HYDRAULIC HOSE | DURITE HYDRAULIC<br>TUBO HYDRAULICO<br>HYDRAUL.SCHLAUCH<br>TUBO HYDRAULICO |
| 2* | 851835 | [B]<br>◀▶ 106" | **2** | HYDRAULIC HOSE | DURITE HYDRAULIC<br>TUBO HYDRAULICO<br>HYDRAUL.SCHLAUCH<br>TUBO HYDRAULICO |
| 3* | 851335 | [A]<br>◀▶ 62" | **2** | HYDRAULIC HOSE | DURITE HYDRAULIC<br>TUBO HYDRAULICO<br>HYDRAUL.SCHLAUCH<br>TUBO HYDRAULICO |
| 3* | 851834 | [B]<br>◀▶ 92" | **2** | HYDRAULIC HOSE | DURITE HYDRAULIC<br>TUBO HYDRAULICO<br>HYDRAUL.SCHLAUCH<br>TUBO HYDRAULICO |
| 4* | 853736 | | **2** | BRACKET | SUPPORT FIXATION<br>STAFFETTA<br>HALTEARM<br>SOPORTE |
| 5* | W232686B | | **2** | BRACKET | SUPPORT FIXATION<br>STAFFETTA<br>HALTEARM<br>SOPORTE |
| 6* | 70921210 | 3/8"-16 X 1 | **4** | BOLT UNC | BOULON UNC<br>BULLONE UNC<br>MASCH.SCHRB.UNC<br>PERNO UNC |
| 7* | 70916965 | 3/8" | **4** | LOCK WASHER | RONDELLE FREIN<br>RONDELLA ARRESTO<br>SICHERUNGSRING<br>ARANDELA SEGURID |
| 8* | **70916950** | 3/8"-16 | **4** | NUT UNC | ECROU UNC<br>DADO UNC<br>MUTTER UNC<br>TUERCA UNC |
| 9* | 852967 | | **1** | SPACER | ENTRETOISE<br>DISTANZIALE<br>ABSTANDSTUECK<br>DISCO ESPACIADOR |
| 10* | 851456 | | **1** | BRACKET | SUPPORT FIXATION<br>STAFFETTA<br>HALTEARM<br>SOPORTE |
| 11* | **70921885** | | **X** | O RING | JOINT TORIQUE<br>GIUNTO DI TENUTA<br>O-RING<br>JUNTA TOROIDAL |
| 12* | 846634 | | **10** | UNION | RACCORD<br>RACCORDO<br>VERSCHRAUBUNG<br>RACOR |
| 12* | **70921885** | 12 | **1** | O RING | JOINT TORIQUE<br>GIUNTO DI TENUTA<br>O-RING<br>JUNTA TOROIDAL |
| 13* | 851960 | 👁 40-85 No 1 | **1** | VALVE | SOUPAPE<br>VALVOLA<br>VENTIL<br>VALVULA |
| 14* | 70923282 | 1/4"-20 X 2-1/2 | **2** | BOLT UNC | BOULON UNC<br>BULLONE UNC<br>MASCH.SCHRB.UNC<br>PERNO UNC |
| 15* | 705012 | [C]<br>1/4" | **2** | LOCK WASHER | RONDELLE FREIN<br>RONDELLA ARRESTO<br>SICHERUNGSRING<br>ARANDELA SEGURID |
| 16* | 70916622 | [C]<br>1/4"-20 | **2** | NUT UNC | ECROU UNC<br>DADO UNC<br>MUTTER UNC<br>TUERCA UNC |
| 17* | **737016** | | **2** | PLUG | BOUCHON<br>TAPPO<br>STOPFEN<br>TAPON |
| 18* | 700703886 | | **2** | MALE COUPLER | COUPLEUR MALE<br>GIUNTO MASCHIO<br>KUPPLST.INNEN<br>ACOPLADOR MACHO |
| 19* | **7037781** | | **X** | O RING | JOINT TORIQUE<br>GIUNTO DI TENUTA<br>O-RING<br>JUNTA TOROIDAL |
| 20* | 360202X91 | | **2** | UNION | RACCORD<br>RACCORDO<br>VERSCHRAUBUNG<br>RACOR |
| 20* | **7037781** | 20 | **1** | O RING | JOINT TORIQUE<br>GIUNTO DI TENUTA<br>O-RING<br>JUNTA TOROIDAL |
| 21* | 851835 | ◀▶ 106" | **2** | HYDRAULIC HOSE | DURITE HYDRAULIC<br>TUBO HYDRAULICO<br>HYDRAUL.SCHLAUCH<br>TUBO HYDRAULICO |
| 22* | 70921013 | | **2** | ELBOW | COUDE<br>GOMITO<br>WINKELSTUECK<br>CODO |

| | | | |
|---|---|---|---|
| **Wing Lift Hydraulic**<br>**Relevage Hydraulique Des Bords Externes**<br>**Scharklinge Hydraulischer**<br>**Sollevatore Idraulico Di Bordi Esterni**<br>**Elevador Hidráulico De Bordes Externos** | **Vertical Fold Frame**<br>**Châssis Rabattable**<br>**Falte Rahmen**<br>**Telaio Ribaltabile**<br>**Bastidor Abatible** | **40-80** | **8 & 12 Rows Narrow**<br>**8 & 12 Rangs Etroits**<br>**8 & 12 Schmal Reihes**<br>**8 & 12 Lineas Stretta**<br>**8 & 12 Lineas Estrecho** |

5-PM09-001-A

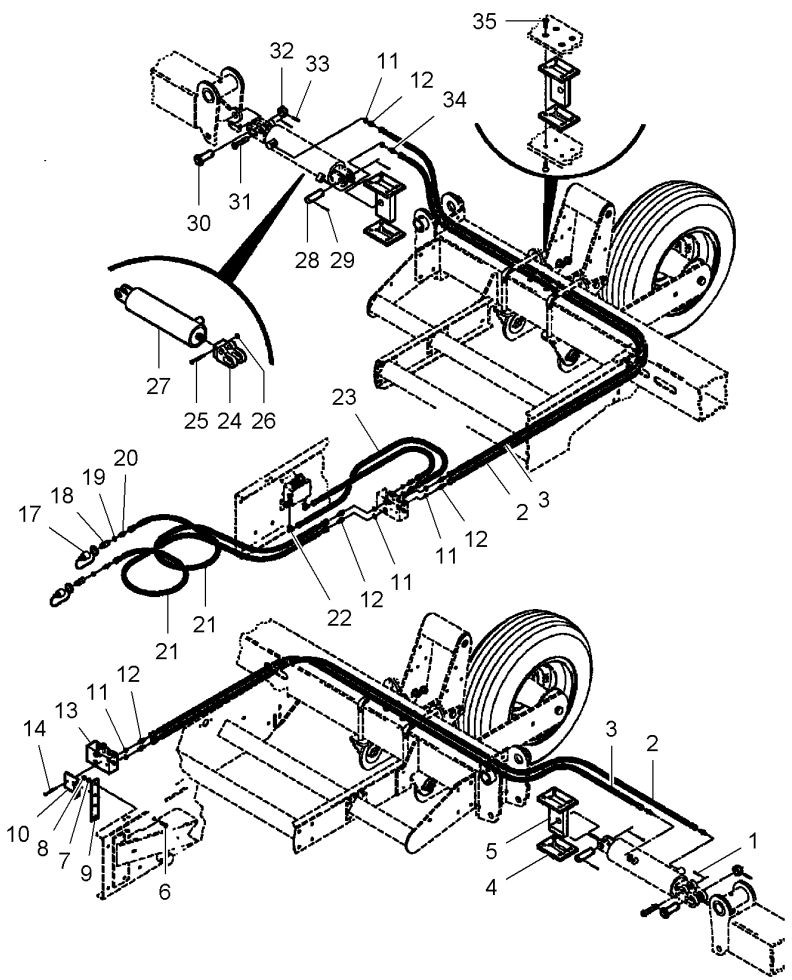


| | | | | | |
|---|---|---|---|---|---|
| 23* | 852101 | ◀▶ 28" | **2** HYDRAULIC HOSE | DURITE HYDRAULIC<br>TUBO HYDRAULICO | HYDRAUL.SCHLAUCH<br>TUBO HYDRAULICO |
| 24* | 851979 | | **2** CLEVIS | CHAPE<br>GANCIO D'ATTACCO | GABELSTUECK<br>GANCHO SEGURI. |
| 25* | W908323-4 | 5/16"-18 X 2-1/2 | **2** CAPSCREW | VIS BOUCHON<br>TAPPO A VITE | HUTSCHRAUBE<br>TORNILLO TAPON |
| 26* | Y704163 | 5/16"-18 | **2** LOCKNUT | ECROU FREIN<br>AUTOBLOCCANTE | SICHERUNGSMUTTER<br>CONTRATUERCA |
| 27* | N851980 | 40-90 No 1 | **2** HYDRAULIC, CYLIN | VERIN HYDRAULI.<br>CILINDRO IDRAULI | HYDRAULIK ZYLIND<br>CILINDRO IDRAULI |
| 28* | N15148 | 1" X 3 | **2** CLEVIS PIN | AXE<br>PERNO D'ATTACCO | SPLINTBOLZEN<br>BULON CILINDRICO |
| 29* | 932036 | 3/16" X 1-1/2 | **4** SPLIT PIN | GOUPILLE FENDUE<br>COPIGLIA | SPALTBOLZEN<br>PASADOR HENDIDO |
| 30* | 851965 | | **2** CLEVIS PIN | AXE<br>PERNO D'ATTACCO | SPLINTBOLZEN<br>BULON CILINDRICO |
| 31* | 851966 | | **2** CLEVIS PIN | AXE<br>PERNO D'ATTACCO | SPLINTBOLZEN<br>BULON CILINDRICO |
| 32* | 851967 | | **2** COLLAR | COLLERETTE<br>COLLARE | KRAGEN<br>COLLARIN |
| 33* | 70915523 | 5/16" X 1-1/2 | **2** PIN | GOUPILLE<br>COPPIGLIA | STIFT<br>PASADOR |
| 34* | 17562 | | **2** ADAPTOR | ADAPTATEUR<br>ADATTATORE | REDUZIERNIPPEL<br>ADAPTADOR |
| 34* | **70921885** | 34 | **1** O RING | JOINT TORIQUE<br>GIUNTO DI TENUTA | O-RING<br>JUNTA TOROIDAL |
| 35* | 17622 | 1/2"-13 X 1 | **16** SCREW | VIS<br>VITE | SCHRAUBE<br>TORNILLO |

[A] 8 ROW NARROW
8 RANGS ETROITS
8 SCHMAL REIHE
8 LINEAS STRETTA
8 LINEAS ESTRECHO

[B] 12 ROW NARROW
12 RANGS ETROITS
12 SCHAMAL REIHE
12 LINEA STRETTA
12 LINEA ESTRECHO

[C] NOT ILLUSTRATED
NON ILLUSTRE
NICHT ABGEBILDET
NON ILLUSTRATO
NO ILUSTRADO

**Valve**
**Soupape**
**Ventil**
**Valvola**
**Válvula**

**40-85**

5-PL36-003-A

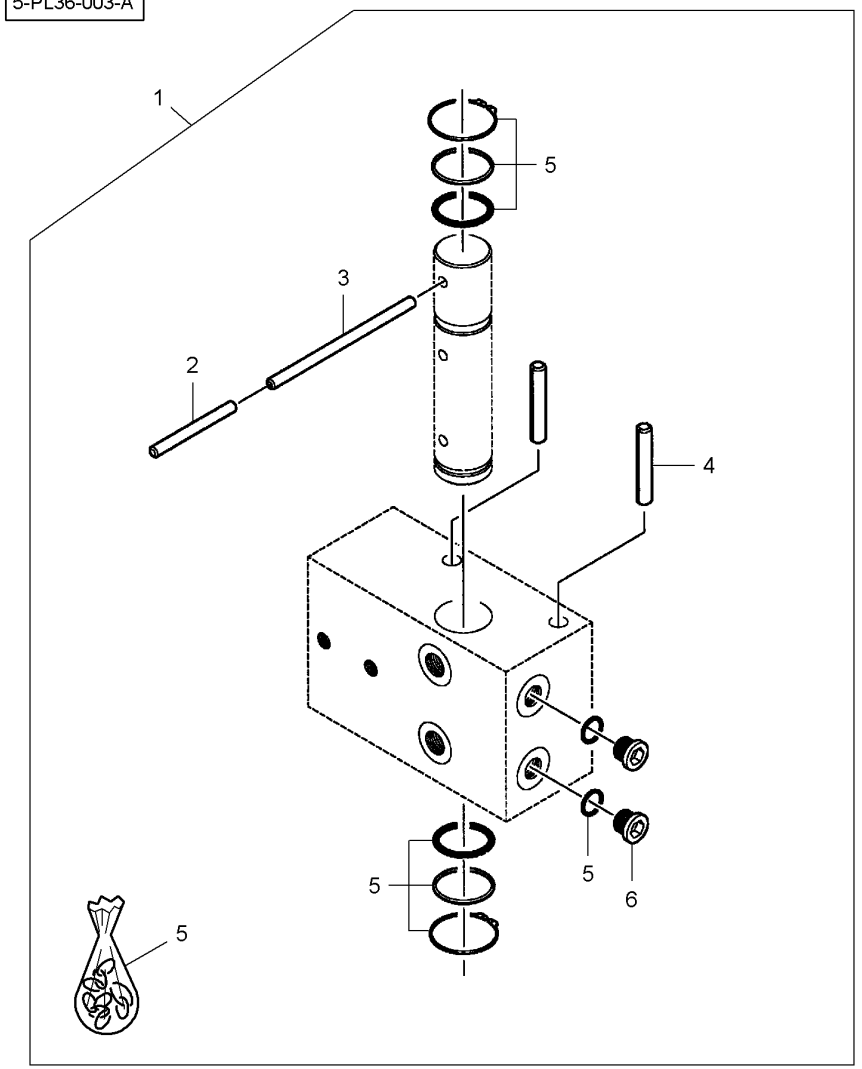


| | | | | | | |
|---|---|---|---|---|---|---|
| 1* | 851960 | | **1** | VALVE | SOUPAPE<br>VALVOLA | VENTIL<br>VALVULA |
| 2* | 852770 | 1 | **1** | SLEEVE | MANCHON<br>MANICOTTO | HUELSE<br>MANGUITO |
| 3* | W933240 | 1 5/16" X 4 | **1** | ROLL PIN | GOUPILLE ROULEE<br>SPINA ELASTICA | SPANNHUELSE<br>PASADOR ELASTICO |
| 4* | 70916171 | 1 1/4" X 1-1/2 | **2** | ROLL PIN | GOUPILLE ROULEE<br>SPINA ELASTICA | SPANNHUELSE<br>PASADOR ELASTICO |
| 5* | **852797** | 1 | **1** | KIT, SEAL | JEU ETANCHEITE<br>KIT TENUTA | DICHTRINGSATZ<br>RETENES JUEGO |
| 6* | 852746 | 1 | **2** | PLUG | BOUCHON<br>TAPPO | STOPFEN<br>TAPON |

**Hydraulic Cylinder**
**Vérin Hydraulique**
**Hydraulikzylinder**
**Martinetto Idraulico**
**Gato Hidráulico**

**40-90**

5-PL37-007-A

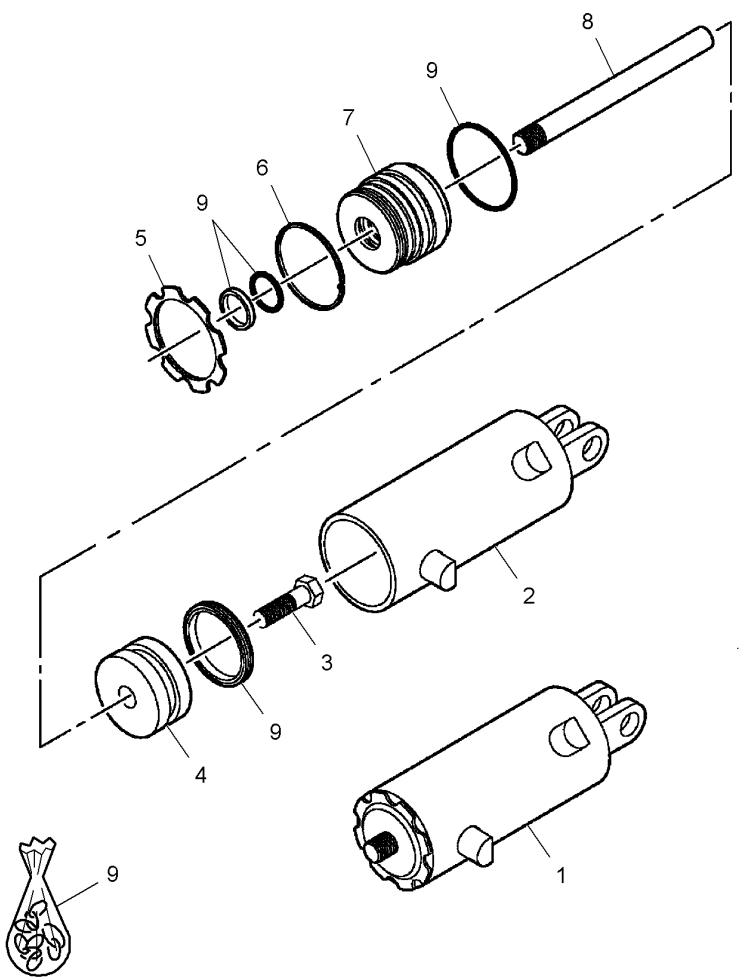


| | | | | | | |
|---|---|---|---|---|---|---|
| 1* | N851980 | | **1** | HYDRAULIC, CYLIN | VERIN HYDRAULI.<br>CILINDRO IDRAULI | HYDRAULIK ZYLIND<br>CILINDRO IDRAULI |
| 2* | 852460 | 1 | **1** | CYLINDER CASING | CORPS CYLINDRE<br>CORPO CILINDRO | ZYLINDERMANTEL<br>CUERPO CILINDRO |
| 3* | 700703384 | 1 7/8"-14 X 2 | **1** | CAPSCREW | VIS BOUCHON<br>TAPPO A VITE | HUTSCHRAUBE<br>TORNILLO TAPON |
| 4* | 852809 | 1 | **1** | PISTON | PISTON<br>PISTONE | KOLBEN<br>PISTON |
| 5* | 852813 | 1 | **1** | LOCKNUT | ECROU FREIN<br>AUTOBLOCCANTE | SICHERUNGSMUTTER<br>CONTRATUERCA |
| 6* | 852812 | 1 | **1** | RING | ANNEAU<br>ANELLO | RING.<br>ANILLO |
| 7* | 852811 | 1 | **1** | HEAD | TETE<br>TESTA | KOPF<br>CULATA |
| 8* | 852810 | 1 | **1** | ROD | TRINGLE<br>ASTA | STANGE<br>VARILLA |
| 9* | **852808** | 1 | **1** | KIT, SEAL | JEU ETANCHEITE<br>KIT TENUTA | DICHTRINGSATZ<br>RETENES JUEGO |

| Hydraulic<br>Hydraulique<br>Hydraulische<br>Idraulico<br>Hidráulico | Row Marker<br>Traceur<br>Spurreisser<br>Marcasolco<br>Marcador | 40-95 | Left Side<br>Cote Gauche<br>Linke Seite<br>Lato Sinistro<br>Lado Izquierdo |
|---|---|---|---|

5-PL21-001-B

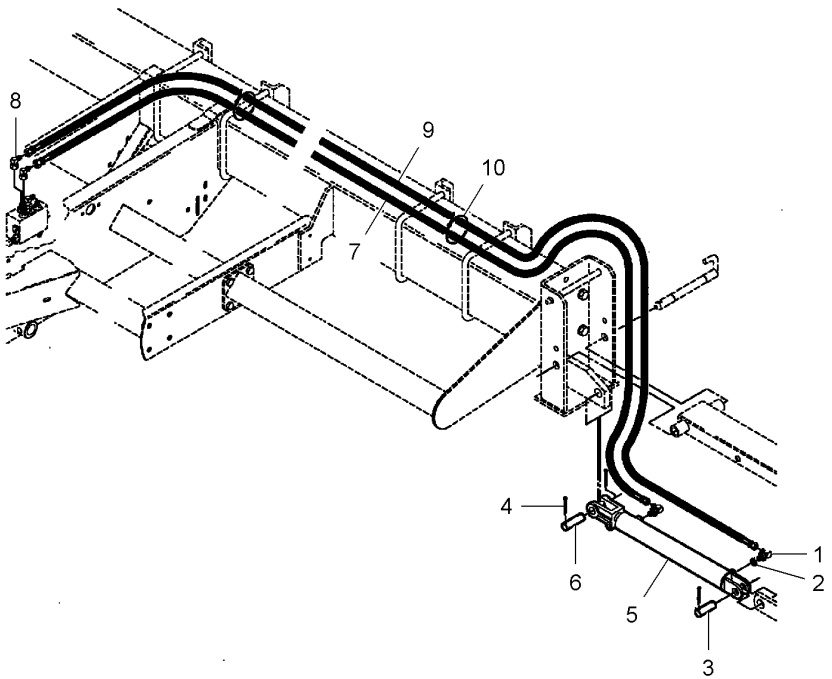


| | | | | | |
|---|---|---|---|---|---|
| 1* | 70922523 | | 2 | ELBOW NIPPLE | RACCORD COUDE<br>NIPPLO GOMITO | WINKELSTUTZEN<br>CODO DE UNION |
| 1* | **70921885** | 1 | 1 | O RING | JOINT TORIQUE<br>GIUNTO DI TENUTA | O-RING<br>JUNTA TOROIDAL |
| 2* | **70921885** | | X | O RING | JOINT TORIQUE<br>GIUNTO DI TENUTA | O-RING<br>JUNTA TOROIDAL |
| 3* | N15148 | 1" X 3 | 1 | CLEVIS PIN | AXE<br>PERNO D'ATTACCO | SPLINTBOLZEN<br>BULON CILINDRICO |
| 4* | 932036 | Undef Ref | 4 | SPLIT PIN | GOUPILLE FENDUE<br>COPIGLIA | SPALTBOLZEN<br>PASADOR HENDIDO |
| 5* | 853541 | ...<br>40-120 No 1 | 1 | HYDRAULIC, CYLIN | VERIN HYDRAULI.<br>CILINDRO IDRAULI | HYDRAULIK ZYLIND<br>CILINDRO IDRAULI |
| 5* | 700724408 | ...<br>40-120 No 1 | 1 | HYDRAULIC, CYLIN | VERIN HYDRAULI.<br>CILINDRO IDRAULI | HYDRAULIK ZYLIND<br>CILINDRO IDRAULI |
| 6* | W247969B | 1" X 3-3/8 | 1 | PIN | GOUPILLE<br>COPPIGLIA | STIFT<br>PASADOR |
| 7* | 852548 | [AC]<br>137" | 1 | HYDRAULIC HOSE | DURITE HYDRAULIC<br>TUBO HYDRAULICO | HYDRAUL.SCHLAUCH<br>TUBO HYDRAULICO |
| 7* | 851462 | [BD]<br>180" | 1 | HYDRAULIC HOSE | DURITE HYDRAULIC<br>TUBO HYDRAULICO | HYDRAUL.SCHLAUCH<br>TUBO HYDRAULICO |
| 7* | 852549 | [E]<br>150" | 1 | HYDRAULIC HOSE | DURITE HYDRAULIC<br>TUBO HYDRAULICO | HYDRAUL.SCHLAUCH<br>TUBO HYDRAULICO |
| 7* | 852013 | [F]<br>228" | 1 | HYDRAULIC HOSE | DURITE HYDRAULIC<br>TUBO HYDRAULICO | HYDRAUL.SCHLAUCH<br>TUBO HYDRAULICO |
| 8* | 70921013 | | 2 | ELBOW | COUDE<br>GOMITO | WINKELSTUECK<br>CODO |
| 9* | 852551 | [AC]<br>146" | 1 | HYDRAULIC HOSE | DURITE HYDRAULIC<br>TUBO HYDRAULICO | HYDRAUL.SCHLAUCH<br>TUBO HYDRAULICO |
| 9* | 852011 | [BD]<br>190" | 1 | HYDRAULIC HOSE | DURITE HYDRAULIC<br>TUBO HYDRAULICO | HYDRAUL.SCHLAUCH<br>TUBO HYDRAULICO |
| 9* | 852107 | [E]<br>162" | 1 | HYDRAULIC HOSE | DURITE HYDRAULIC<br>TUBO HYDRAULICO | HYDRAUL.SCHLAUCH<br>TUBO HYDRAULICO |
| 9* | 851862 | [F]<br>238" | 1 | HYDRAULIC HOSE | DURITE HYDRAULIC<br>TUBO HYDRAULICO | HYDRAUL.SCHLAUCH<br>TUBO HYDRAULICO |
| 10* | 70937133 | | 3 | CABLE TIE | ATTACHE CABLE<br>FASCETTA CAVI | KABELBINDER<br>APRIETACABLES |

[A] 3 ROWS WITH 1,5 M SPACING
3 RANGS AVEC ESPACEMENT 1,5 M
3 REIHE MIT ABSTAND 1,5 M
3 LINEAS CON DISTANZIAMENTO 1,5 M
3 LINEAS CON ESPACIAMIENTO 1,5 M

[B] 3 ROWS WITH 2,3 M SPACING
3 RANGS AVEC ESPACEMENT 2,3 M
3 REIHE MIT ABSTAND 2,3 M
3 LINEAS CON DISTANZIAMENTO 2,3 M
3 LINEAS CON ESPACIAMIENTO 2,3 M

| | | | |
|---|---|---|---|
| **Hydraulic**<br>**Hydraulique**<br>**Hydraulische**<br>**Idraulico**<br>**Hidráulico** | **Row Marker**<br>**Traceur**<br>**Spurreisser**<br>**Marcasolco**<br>**Marcador** | **40-95** | **Left Side**<br>**Cote Gauche**<br>**Linke Seite**<br>**Lato Sinistro**<br>**Lado Izquierdo** |

5-PL21-001-B

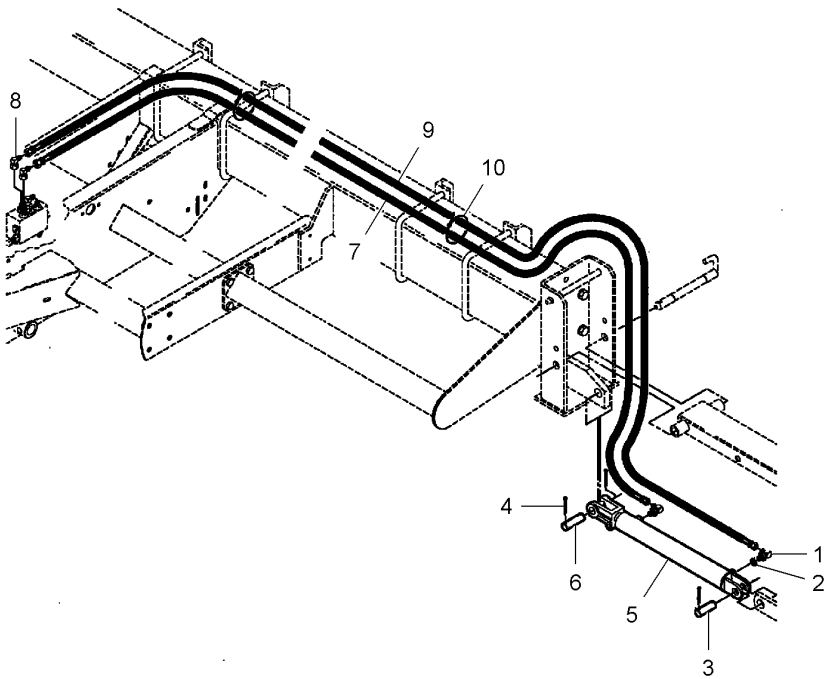


[C] 4 ROW
4 RANGS
4 REIHE
4 LINEA
4 LINEA

[D] 6 ROW WIDE - 8 ROW NARROW
6 RANGS LARGES - 8 RANGS ETROITS
6 BREITE REIHE - 8 SCHMAL REIHE
6 LINEAS LARGA - 8 LINEAS STRETTA
6 LINEAS ANCHA - 8 LINEAS ESTRECHO

[E] 6 ROW NARROW - 8 ROW WIDE
6 RANGS ETROITS - 8 RANGS LARGES
6 SCHMAL REIHE - 8 BREITE REIHE
6 LINEAS STRETTA - 8 LINEAS LARGA
6 LINEAS ESTRECHO - 8 LINEAS ANCHA

[F] 12 ROW NARROW
12 RANGS ETROITS
12 SCHAMAL REIHE
12 LINEA STRETTA
12 LINEA ESTRECHO

| | | | |
|---|---|---|---|
| **Hydraulic** | **Row Marker** | **40-100** | **3-4-6-8 Rows - Right Side** |
| **Hydraulique** | **Traceur** | | **3-4-6-8 Rangs - Cote Droit** |
| **Hydraulische** | **Spurreisser** | | **3-4-6-8 Reihes - Rechte Seite** |
| **Idraulico** | **Marcasolco** | | **3-4-6-8 Lineas - Lato Destro** |
| **Hidráulico** | **Marcador** | | **3-4-6-8 Lineas - Lado Derecho** |

5-PL21-002-B

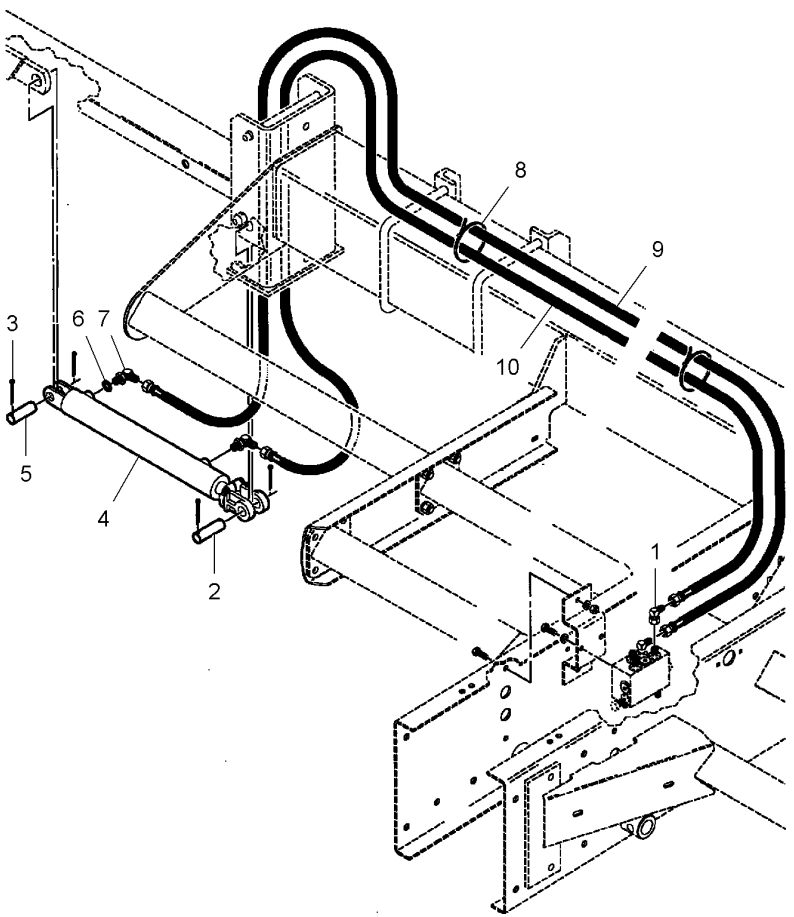


| | | | | | |
|---|---|---|---|---|---|
| 1* | 70921013 | | 1 | ELBOW | COUDE<br>GOMITO | WINKELSTUECK<br>CODO |
| 2* | W247969B | 1" X 3-3/8 | 1 | PIN | GOUPILLE<br>COPPIGLIA | STIFT<br>PASADOR |
| 3* | 932036 | 3/16" X 1-1/2 | 4 | SPLIT PIN | GOUPILLE FENDUE<br>COPIGLIA | SPALTBOLZEN<br>PASADOR HENDIDO |
| 4* | 853541 | ...<br>40-120 No 1 | 1 | HYDRAULIC, CYLIN | VERIN HYDRAULI.<br>CILINDRO IDRAULI | HYDRAULIK ZYLIND<br>CILINDRO IDRAULI |
| 4* | 700724408 | ...<br>40-120 No 1 | 1 | HYDRAULIC, CYLIN | VERIN HYDRAULI.<br>CILINDRO IDRAULI | HYDRAULIK ZYLIND<br>CILINDRO IDRAULI |
| 5* | N15148 | 1" X 3 | 1 | CLEVIS PIN | AXE<br>PERNO D'ATTACCO | SPLINTBOLZEN<br>BULON CILINDRICO |
| 6* | **70921885** | 9/16-18 X 90 | X | O RING | JOINT TORIQUE<br>GIUNTO DI TENUTA | O-RING<br>JUNTA TOROIDAL |
| 7* | 70922523 | | 2 | ELBOW NIPPLE | RACCORD COUDE<br>NIPPLO GOMITO | WINKELSTUTZEN<br>CODO DE UNION |
| 7* | **70921885** | 7 | 1 | O RING | JOINT TORIQUE<br>GIUNTO DI TENUTA | O-RING<br>JUNTA TOROIDAL |
| 8* | 70937133 | 1/4 X 146" | 3 | CABLE TIE | ATTACHE CABLE<br>FASCETTA CAVI | KABELBINDER<br>APRIETACABLES |
| 9* | 852551 | [AC]<br>◀▶ 146" | 1 | HYDRAULIC HOSE | DURITE HYDRAULIC<br>TUBO HYDRAULICO | HYDRAUL.SCHLAUCH<br>TUBO HYDRAULICO |
| 9* | 852011 | [BD]<br>◀▶ 190" | 1 | HYDRAULIC HOSE | DURITE HYDRAULIC<br>TUBO HYDRAULICO | HYDRAUL.SCHLAUCH<br>TUBO HYDRAULICO |
| 9* | 852107 | [E]<br>◀▶ 162" | 1 | HYDRAULIC HOSE | DURITE HYDRAULIC<br>TUBO HYDRAULICO | HYDRAUL.SCHLAUCH<br>TUBO HYDRAULICO |
| 10* | 852548 | [AC]<br>◀▶ 137" | 1 | HYDRAULIC HOSE | DURITE HYDRAULIC<br>TUBO HYDRAULICO | HYDRAUL.SCHLAUCH<br>TUBO HYDRAULICO |
| 10* | 851462 | [BD]<br>◀▶ 180" | 1 | HYDRAULIC HOSE | DURITE HYDRAULIC<br>TUBO HYDRAULICO | HYDRAUL.SCHLAUCH<br>TUBO HYDRAULICO |
| 10* | 852549 | [E]<br>◀▶ 150" | 1 | HYDRAULIC HOSE | DURITE HYDRAULIC<br>TUBO HYDRAULICO | HYDRAUL.SCHLAUCH<br>TUBO HYDRAULICO |

[A] 3 ROWS WITH 1,5 M SPACING
3 RANGS AVEC ESPACEMENT 1,5 M
3 REIHE MIT ABSTAND 1,5 M
3 LINEAS CON DISTANZIAMENTO 1,5 M
3 LINEAS CON ESPACIAMIENTO 1,5 M

[B] 3 ROWS WITH 2,3 M SPACING
3 RANGS AVEC ESPACEMENT 2,3 M
3 REIHE MIT ABSTAND 2,3 M
3 LINEAS CON DISTANZIAMENTO 2,3 M
3 LINEAS CON ESPACIAMIENTO 2,3 M

[C] 4 ROW
4 RANGS
4 REIHE
4 LINEA
4 LINEA

| | | | |
|---|---|---|---|
| **Hydraulic**<br>**Hydraulique**<br>**Hydraulische**<br>**Idraulico**<br>**Hidráulico** | **Row Marker**<br>**Traceur**<br>**Spurreisser**<br>**Marcasolco**<br>**Marcador** | **40-100** | **3-4-6-8 Rows - Right Side**<br>**3-4-6-8 Rangs - Cote Droit**<br>**3-4-6-8 Reihes - Rechte Seite**<br>**3-4-6-8 Lineas - Lato Destro**<br>**3-4-6-8 Lineas - Lado Derecho** |

5-PL21-002-B

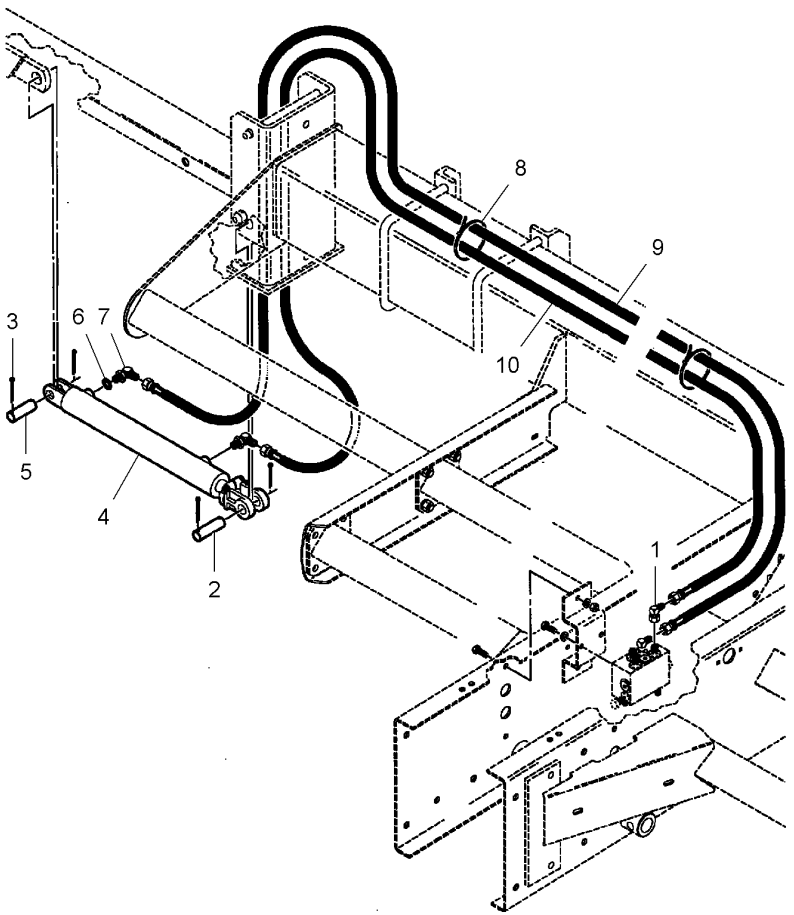


[D] 6 ROW WIDE - 8 ROW NARROW
6 RANGS LARGES - 8 RANGS ETROITS
6 BREITE REIHE - 8 SCHMAL REIHE
6 LINEAS LARGA - 8 LINEAS STRETTA
6 LINEAS ANCHA - 8 LINEAS ESTRECHO

[E] 6 ROW NARROW - 8 ROW WIDE
6 RANGS ETROITS - 8 RANGS LARGES
6 SCHMAL REIHE - 8 BREITE REIHE
6 LINEAS STRETTA - 8 LINEAS LARGA
6 LINEAS ESTRECHO - 8 LINEAS ANCHA

| Hydraulic | Row Marker | 40-105 | 12 Narrow Rows - Right Side |
|---|---|---|---|
| Hydraulique | Traceur | | 12 Rangs Etroits - Cote Droit |
| Hydraulische | Spurreisser | | 12 Enge Reihen - Rechte Seite |
| Idraulico | Marcasolco | | 12 Lineas Stretti - Lato Destro |
| Hidráulico | Marcador | | 12 Lineas Estrechos - Lado Derecho |

5-PL21-003-A

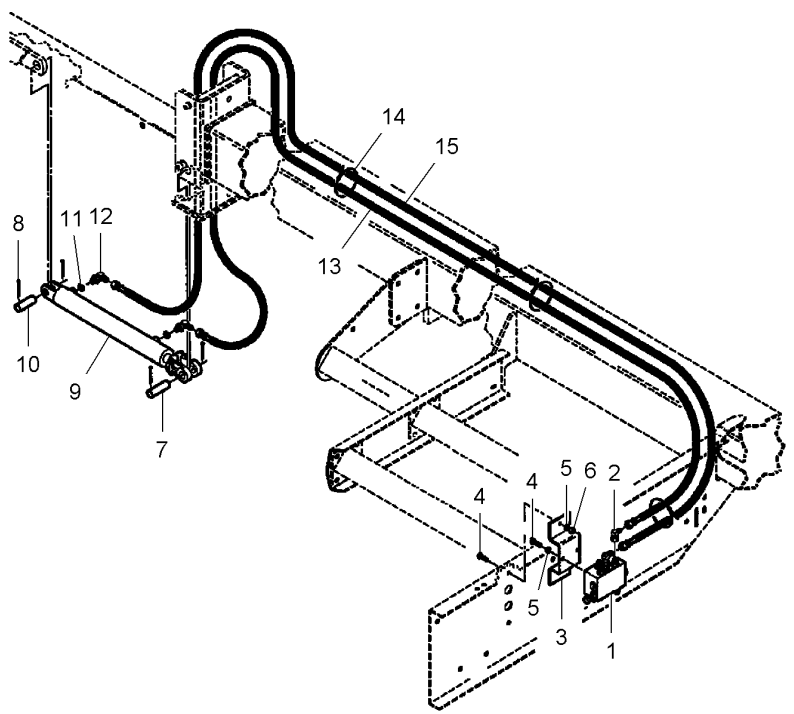


| | | | | | |
|---|---|---|---|---|---|
| 1* | N851998 | | 1 VALVE | SOUPAPE<br>VALVOLA | VENTIL<br>VALVULA |
| 2* | 70921013 | | 2 ELBOW | COUDE<br>GOMITO | WINKELSTUECK<br>CODO |
| 3* | 853853 | | 2 BRACKET | SUPPORT FIXATION<br>STAFFETTA | HALTEARM<br>SOPORTE |
| 4* | 70921210 | 3/8"-16 X 1 | 8 BOLT UNC | BOULON UNC<br>BULLONE UNC | MASCH.SCHRB.UNC<br>PERNO UNC |
| 5* | 70916965 | 3/8" | 8 LOCK WASHER | RONDELLE FREIN<br>RONDELLA ARRESTO | SICHERUNGSRING<br>ARANDELA SEGURID |
| 6* | **70916950** | 3/8"-16 | 4 NUT UNC | ECROU UNC<br>DADO UNC | MUTTER UNC<br>TUERCA UNC |
| 7* | W247969B | 1" X 3-3/8 | 1 PIN | GOUPILLE<br>COPPIGLIA | STIFT<br>PASADOR |
| 8* | 932036 | 3/16" X 1-1/2 | 1 SPLIT PIN | GOUPILLE FENDUE<br>COPIGLIA | SPALTBOLZEN<br>PASADOR HENDIDO |
| 9* | 853541 | ...<br>40-120 No 1 | 1 HYDRAULIC, CYLIN | VERIN HYDRAULI.<br>CILINDRO IDRAULI | HYDRAULIK ZYLIND<br>CILINDRO IDRAULI |
| 9* | 700724408 | ...<br>40-120 No 1 | 1 HYDRAULIC, CYLIN | VERIN HYDRAULI.<br>CILINDRO IDRAULI | HYDRAULIK ZYLIND<br>CILINDRO IDRAULI |
| 10* | N15148 | 1" X 3 | 1 CLEVIS PIN | AXE<br>PERNO D'ATTACCO | SPLINTBOLZEN<br>BULON CILINDRICO |
| 11* | **70921885** | | X O RING | JOINT TORIQUE<br>GIUNTO DI TENUTA | O-RING<br>JUNTA TOROIDAL |
| 12* | 70922523 | | 2 ELBOW NIPPLE | RACCORD COUDE<br>NIPPLO GOMITO | WINKELSTUTZEN<br>CODO DE UNION |
| 12* | **70921885** | 12 | 1 O RING | JOINT TORIQUE<br>GIUNTO DI TENUTA | O-RING<br>JUNTA TOROIDAL |
| 13* | 852013 | 228" | 1 HYDRAULIC HOSE | DURITE HYDRAULIC<br>TUBO HYDRAULICO | HYDRAUL.SCHLAUCH<br>TUBO HYDRAULICO |
| 14* | 70937133 | | 1 CABLE TIE | ATTACHE CABLE<br>FASCETTA CAVI | KABELBINDER<br>APRIETACABLES |
| 15* | 851862 | 238" | 1 HYDRAULIC HOSE | DURITE HYDRAULIC<br>TUBO HYDRAULICO | HYDRAUL.SCHLAUCH<br>TUBO HYDRAULICO |

| | | |
|---|---|---|
| **Hydraulic**<br>**Hydraulique**<br>**Hydraulische**<br>**Idraulico**<br>**Hidráulico** | **Row Marker**<br>**Traceur**<br>**Spurreisser**<br>**Marcasolco**<br>**Marcador** | **40-110** |

**Vertical Fold Frame - Left Side**
**Châssis Rabattable - Cote Gauche**
**Falte Rahmen - Linke Seite**
**Telaio Ribaltabile - Lato Sinistro**
**Bastidor Abatible - Lado Izquierdo**

5-PL21-004-A

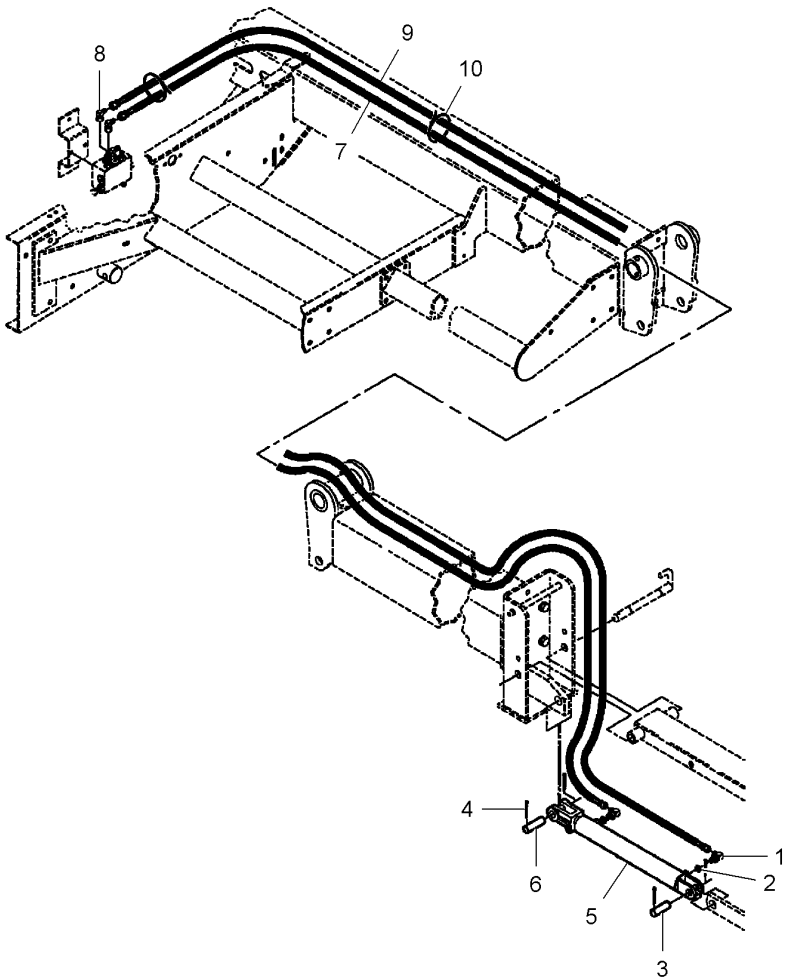


| | | | | | |
|---|---|---|---|---|---|
| 1* | 70922523 | | **2** | ELBOW NIPPLE | RACCORD COUDE<br>NIPPLO GOMITO | WINKELSTUTZEN<br>CODO DE UNION |
| 1* | **70921885** | 1 | **1** | O RING | JOINT TORIQUE<br>GIUNTO DI TENUTA | O-RING<br>JUNTA TOROIDAL |
| 2* | **70921885** | | **X** | O RING | JOINT TORIQUE<br>GIUNTO DI TENUTA | O-RING<br>JUNTA TOROIDAL |
| 3* | N15148 | 1" X 3 | **1** | CLEVIS PIN | AXE<br>PERNO D'ATTACCO | SPLINTBOLZEN<br>BULON CILINDRICO |
| 4* | 932036 | 3/16" X 1-1/2 | **4** | SPLIT PIN | GOUPILLE FENDUE<br>COPIGLIA | SPALTBOLZEN<br>PASADOR HENDIDO |
| 5* | 853541 | ...<br>40-120 No 1 | **1** | HYDRAULIC, CYLIN | VERIN HYDRAULI.<br>CILINDRO IDRAULI | HYDRAULIK ZYLIND<br>CILINDRO IDRAULI |
| 5* | 700724408 | ...<br>40-120 No 1 | **1** | HYDRAULIC, CYLIN | VERIN HYDRAULI.<br>CILINDRO IDRAULI | HYDRAULIK ZYLIND<br>CILINDRO IDRAULI |
| 6* | W247969B | 1" X 3-3/8 | **1** | PIN | GOUPILLE<br>COPPIGLIA | STIFT<br>PASADOR |
| 7* | 851462 | [A]<br>180" | **1** | HYDRAULIC HOSE | DURITE HYDRAULIC<br>TUBO HYDRAULICO | HYDRAUL.SCHLAUCH<br>TUBO HYDRAULICO |
| 7* | 851862 | [B]<br>238" | **1** | HYDRAULIC HOSE | DURITE HYDRAULIC<br>TUBO HYDRAULICO | HYDRAUL.SCHLAUCH<br>TUBO HYDRAULICO |
| 8* | 70921013 | | **2** | ELBOW | COUDE<br>GOMITO | WINKELSTUECK<br>CODO |
| 9* | 852011 | [A]<br>190" | **1** | HYDRAULIC HOSE | DURITE HYDRAULIC<br>TUBO HYDRAULICO | HYDRAUL.SCHLAUCH<br>TUBO HYDRAULICO |
| 9* | 852550 | [B]<br>245" | **1** | HYDRAULIC HOSE | DURITE HYDRAULIC<br>TUBO HYDRAULICO | HYDRAUL.SCHLAUCH<br>TUBO HYDRAULICO |
| 10* | 70937133 | | **3** | CABLE TIE | ATTACHE CABLE<br>FASCETTA CAVI | KABELBINDER<br>APRIETACABLES |

[A] 8 ROW NARROW
8 RANGS ETROITS
8 SCHMAL REIHE
8 LINEAS STRETTA
8 LINEAS ESTRECHO

[B] 12 ROW NARROW
12 RANGS ETROITS
12 SCHAMAL REIHE
12 LINEA STRETTA
12 LINEA ESTRECHO

| Hydraulic | Row Marker | 40-115 | Vertical Fold Frame - Right Side |
|---|---|---|---|
| Hydraulique | Traceur | | Châssis Rabattable - Cote Droit |
| Hydraulische | Spurreisser | | Falte Rahmen - Rechte Seite |
| Idraulico | Marcasolco | | Telaio Ribaltabile - Lato Destro |
| Hidráulico | Marcador | | Bastidor Abatible - Lado Derecho |

5-PL21-005-A

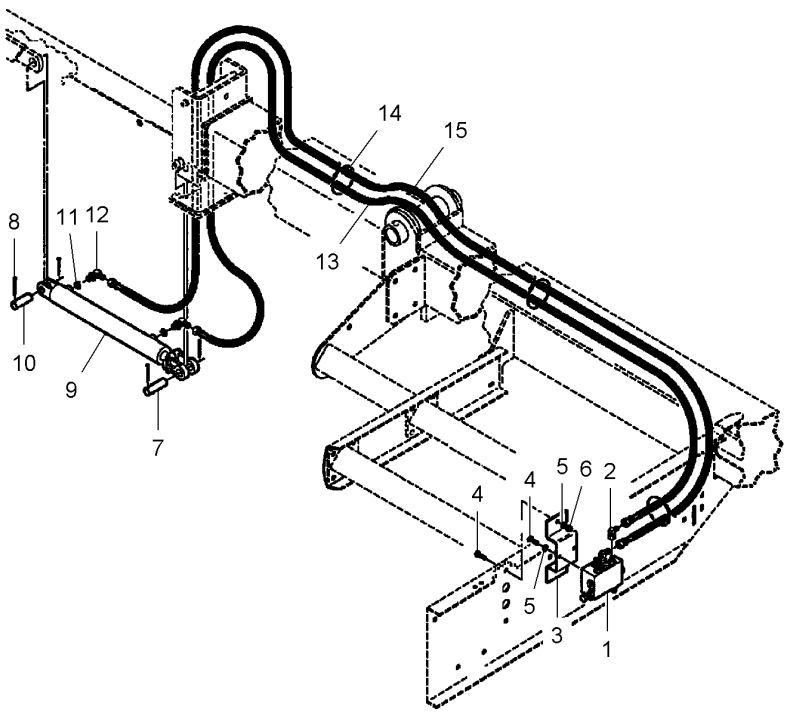


| | | | | | | |
|---|---|---|---|---|---|---|
| 1* | N851998 | | 1 | VALVE | SOUPAPE<br>VALVOLA | VENTIL<br>VALVULA |
| 2* | 70921013 | | 2 | ELBOW | COUDE<br>GOMITO | WINKELSTUECK<br>CODO |
| 3* | 853853 | | 2 | BRACKET | SUPPORT FIXATION<br>STAFFETTA | HALTEARM<br>SOPORTE |
| 4* | 70921210 | 3/8"-16 X 1 | 8 | BOLT UNC | BOULON UNC<br>BULLONE UNC | MASCH.SCHRB.UNC<br>PERNO UNC |
| 5* | 70916965 | 3/8" | 8 | LOCK WASHER | RONDELLE FREIN<br>RONDELLA ARRESTO | SICHERUNGSRING<br>ARANDELA SEGURID |
| 6* | **70916950** | 3/8"-16 | 4 | NUT UNC | ECROU UNC<br>DADO UNC | MUTTER UNC<br>TUERCA UNC |
| 7* | W247969B | 1" X 3-3/8 | 1 | PIN | GOUPILLE<br>COPPIGLIA | STIFT<br>PASADOR |
| 8* | 932036 | 3/16" X 1-1/2 | 1 | SPLIT PIN | GOUPILLE FENDUE<br>COPIGLIA | SPALTBOLZEN<br>PASADOR HENDIDO |
| 9* | 853541 | ...<br>40-120 No 1 | 1 | HYDRAULIC, CYLIN | VERIN HYDRAULI.<br>CILINDRO IDRAULI | HYDRAULIK ZYLIND<br>CILINDRO IDRAULI |
| 9* | 700724408 | ...<br>40-120 No 1 | 1 | HYDRAULIC, CYLIN | VERIN HYDRAULI.<br>CILINDRO IDRAULI | HYDRAULIK ZYLIND<br>CILINDRO IDRAULI |
| 10* | N15148 | 1" X 3 | 1 | CLEVIS PIN | AXE<br>PERNO D'ATTACCO | SPLINTBOLZEN<br>BULON CILINDRICO |
| 11* | **70921885** | | X | O RING | JOINT TORIQUE<br>GIUNTO DI TENUTA | O-RING<br>JUNTA TOROIDAL |
| 12* | 70922523 | | 2 | ELBOW NIPPLE | RACCORD COUDE<br>NIPPLO GOMITO | WINKELSTUTZEN<br>CODO DE UNION |
| 12* | **70921885** | 12 | 1 | O RING | JOINT TORIQUE<br>GIUNTO DI TENUTA | O-RING<br>JUNTA TOROIDAL |
| 13* | 851861 | [A]<br>195" | 1 | HYDRAULIC HOSE | DURITE HYDRAULIC<br>TUBO HYDRAULICO | HYDRAUL.SCHLAUCH<br>TUBO HYDRAULICO |
| 13* | 851862 | [B]<br>238" | 1 | HYDRAULIC HOSE | DURITE HYDRAULIC<br>TUBO HYDRAULICO | HYDRAUL.SCHLAUCH<br>TUBO HYDRAULICO |
| 14* | 70937133 | | 1 | CABLE TIE | ATTACHE CABLE<br>FASCETTA CAVI | KABELBINDER<br>APRIETACABLES |
| 15* | 852108 | [A]<br>183" | 1 | HYDRAULIC HOSE | DURITE HYDRAULIC<br>TUBO HYDRAULICO | HYDRAUL.SCHLAUCH<br>TUBO HYDRAULICO |
| 15* | 852550 | [B]<br>245" | 1 | HYDRAULIC HOSE | DURITE HYDRAULIC<br>TUBO HYDRAULICO | HYDRAUL.SCHLAUCH<br>TUBO HYDRAULICO |

[A] 8 ROW NARROW
8 RANGS ETROITS
8 SCHMAL REIHE
8 LINEAS STRETTA
8 LINEAS ESTRECHO

[B] 12 ROW NARROW
12 RANGS ETROITS
12 SCHAMAL REIHE
12 LINEA STRETTA
12 LINEA ESTRECHO

**Hydraulic Cylinder**
**Vérin Hydraulique**
**Hydraulikzylinder**
**Martinetto Idraulico**
**Gato Hidráulico**

**40-120**

5-PL37-003-B

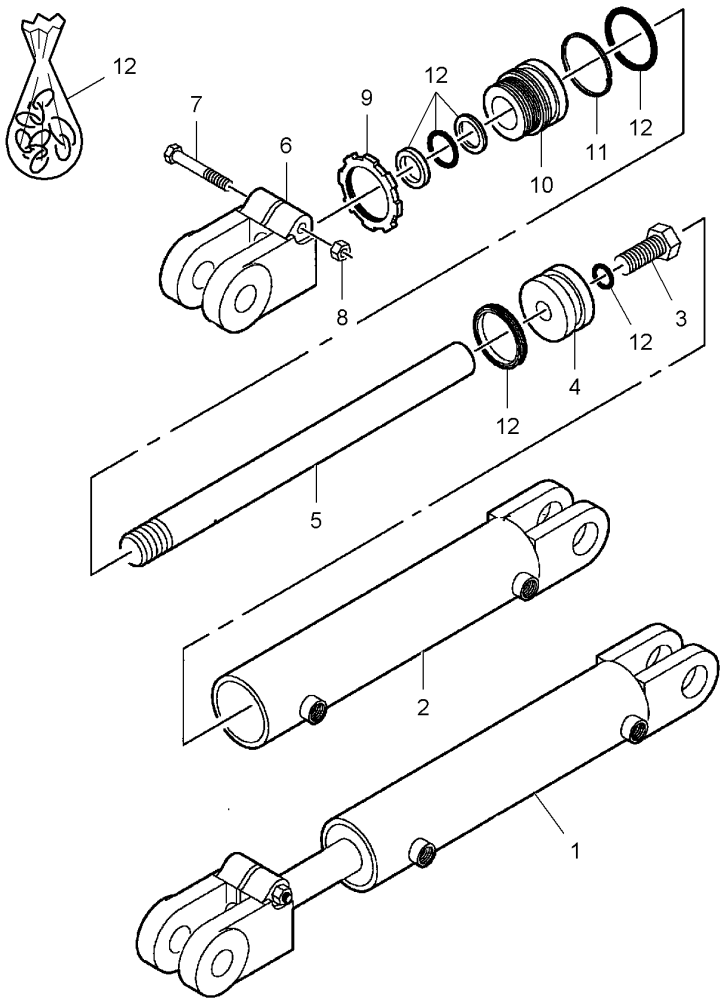


| | | | | | | |
|---|---|---|---|---|---|---|
| 1* | 853541 | ➡| ... | 1 | HYDRAULIC, CYLIN | VERIN HYDRAULI.<br>CILINDRO IDRAULI | HYDRAULIK ZYLIND<br>CILINDRO IDRAULI |
| 1* | 700724408 | ➡ ... | 1 | HYDRAULIC, CYLIN | VERIN HYDRAULI.<br>CILINDRO IDRAULI | HYDRAULIK ZYLIND<br>CILINDRO IDRAULI |
| 2 | 853542 | 1 | 1 | CYLINDER CASING | CORPS CYLINDRE<br>CORPO CILINDRO | ZYLINDERMANTEL<br>CUERPO CILINDRO |
| 3* | 70923884 | 1 5/8"-18 X 1-1/2 | 1 | SCREW | VIS<br>VITE | SCHRAUBE<br>TORNILLO |
| 4* | 853451 | 1 [A] | 1 | PISTON | PISTON<br>PISTONE | KOLBEN<br>PISTON |
| 4* | N855829 | 1 [B] | 1 | PISTON | PISTON<br>PISTONE | KOLBEN<br>PISTON |
| 5* | 853452 | 1 [A]<br>1-1/16" | 1 | ROD | TRINGLE<br>ASTA | STANGE<br>VARILLA |
| 5* | 700724411 | 1 [B] | 1 | ROD | TRINGLE<br>ASTA | STANGE<br>VARILLA |
| 6 | 853453 | 1 | 1 | CLEVIS | CHAPE<br>GANCIO D'ATTACCO | GABELSTUECK<br>GANCHO SEGURI. |
| 7* | **70921972** | 1 3/8"-16 X 2-1/2 | 1 | BOLT UNC | BOULON UNC<br>BULLONE UNC | MASCH.SCHRB.UNC<br>PERNO UNC |
| 8* | **Y704635** | 1 3/8"-16 | 1 | LOCKNUT | ECROU FREIN<br>AUTOBLOCCANTE | SICHERUNGSMUTTER<br>CONTRATUERCA |
| 9* | 853455 | 1 1"-1/2 | 1 | LOCKNUT | ECROU FREIN<br>AUTOBLOCCANTE | SICHERUNGSMUTTER<br>CONTRATUERCA |
| 10* | 853454 | 1 [A] | 1 | HEAD | TETE<br>TESTA | KOPF<br>CULATA |
| 10* | N855828 | 1 [B] | 1 | HEAD | TETE<br>TESTA | KOPF<br>CULATA |
| 11 | 853456 | 1 | 1 | RING | ANNEAU<br>ANELLO | RING.<br>ANILLO |
| 12* | **700723483** | 1 [A] | 1 | KIT, SEAL | JEU ETANCHEITE<br>KIT TENUTA | DICHTRINGSATZ<br>RETENES JUEGO |
| 12* | **700723488** | 1 [B] | 1 | KIT, SEAL | JEU ETANCHEITE<br>KIT TENUTA | DICHTRINGSATZ<br>RETENES JUEGO |

[A] INCLUDED IN 853541
COMPRIS DANS 853541
IN 853541
COMPRESO IN 853541
COMPRENDIDO EN 853541

[B] INCLUDED IN 700724408
COMPRIS DANS 700724408
IN 700724408
COMPRESO IN 700724408
COMPRENDIDO EN 700724408

**Hydraulic Cylinder**
**Vérin Hydraulique**
**Hydraulikzylinder**
**Martinetto Idraulico**
**Gato Hidráulico**

**40-125**

5-PL37-004-B

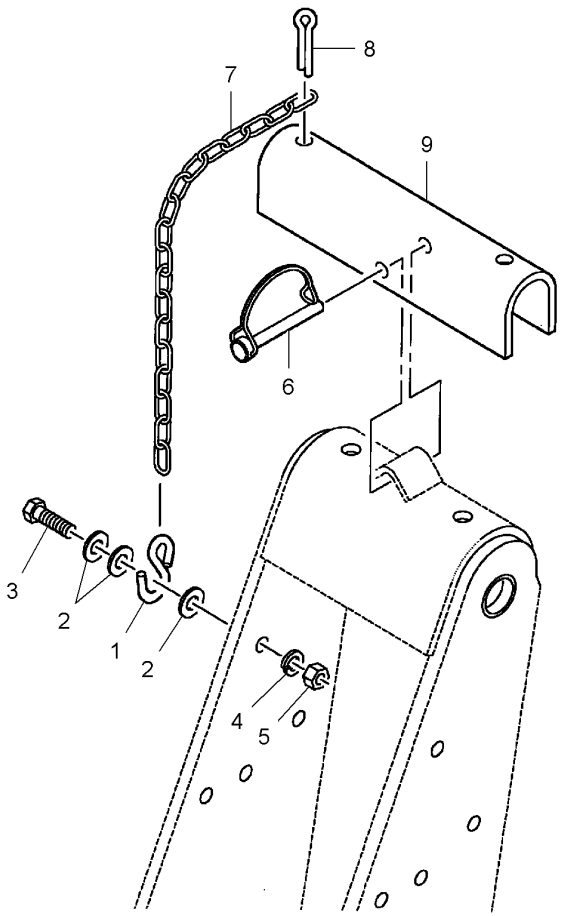


| | | | | | |
|---|---|---|---|---|---|
| 1* | 700717691 | | **1** HOOK | CROCHET<br>GANCIO | HAKEN<br>GANCHO |
| 2* | 76729 | | **3** WASHER | RONDELLE<br>RONDELLA | SCHEIBE<br>ARANDELA |
| 3* | 70920415 | 3/8"-16 X 1-1/4 | **1** BOLT UNC | BOULON UNC<br>BULLONE UNC | MASCH.SCHRB.UNC<br>PERNO UNC |
| 4* | 70916965 | 3/8" | **1** LOCK WASHER | RONDELLE FREIN<br>RONDELLA ARRESTO | SICHERUNGSRING<br>ARANDELA SEGURID |
| 5* | **70916950** | 3/8"-16 | **1** NUT UNC | ECROU UNC<br>DADO UNC | MUTTER UNC<br>TUERCA UNC |
| 6* | W245430B | | **1** CLIP | PATTE D'ATTACHE<br>FERMAGLIO | SCHELLE<br>CLIP |
| 7* | 855279 | | **1** CHAIN | CHAINE<br>CATENA | KETTE<br>CADENA |
| 8* | 354089X1 | 1/4" X 1-1/4 | **1** PIN | GOUPILLE<br>COPPIGLIA | STIFT<br>PASADOR |
| 9* | 851481 | | **1** LOCK | SERRURE<br>SERRATURA | SCHLOSS<br>CERRADURA |

**Fluid Coupler**
**Coupleur Hydraulique**
**Hydraulischer Kuppler**
**Dispositivo D'Accoppiamento**
**Acoplador Hidráulico**

**40-130**

5-PL38-001-B

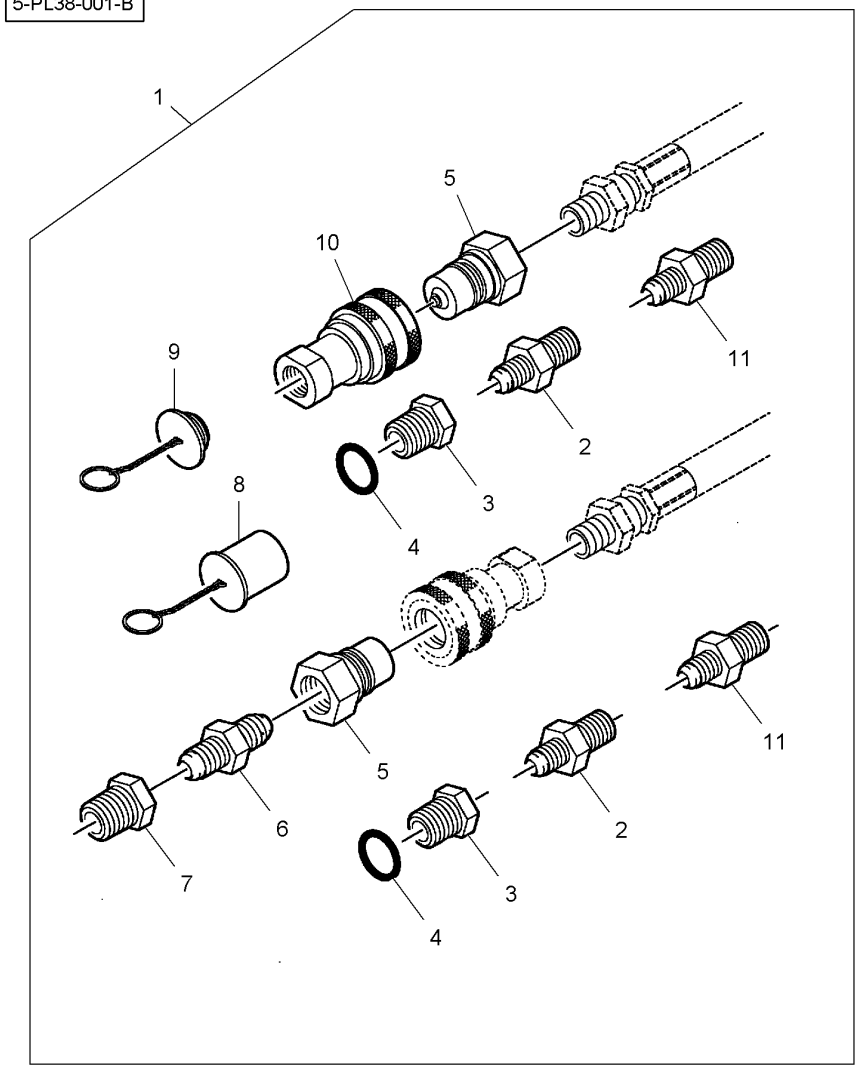


| | | | | | |
|---|---|---|---|---|---|
| 1* | 2086049 | | **1** KIT, ATTACHMENT | JEU ACCESSOIRES<br>KIT ACCESSORI | SATZ ANBAUTEILE<br>JUEGO ACCESORIO |
| 2* | 70919127 | 1 1/2-14 X 9/16-18 | **2** UNION | RACCORD<br>RACCORDO | VERSCHRAUBUNG<br>RACOR |
| 3* | 70921573 | 1 3/4-16 | **2** PLUG | BOUCHON<br>TAPPO | STOPFEN<br>TAPON |
| 4* | **7037781** | 3 | **1** O RING | JOINT TORIQUE<br>GIUNTO DI TENUTA | O-RING<br>JUNTA TOROIDAL |
| 5* | 7746688 | 1 1/2-14 | **2** COUPLER | COUPLEUR<br>ACCOPPIATORE | KUPPLER<br>ACOPLADOR |
| 6* | 7846140 | 1 1/2-14 | **1** UNION | RACCORD<br>RACCORDO | VERSCHRAUBUNG<br>RACOR |
| 7* | 70901828 | 1 1/2-14 X 1/2-14 | **1** REDUCER | REDUCTEUR<br>RIDUTTORE | REDUZIERSTUECK<br>REDUCCION |
| 8* | **737016** | 1 | **2** PLUG | BOUCHON<br>TAPPO | STOPFEN<br>TAPON |
| 9* | 252788M1 | 1 | **1** PLUG | BOUCHON<br>TAPPO | STOPFEN<br>TAPON |
| 10* | 1086692M91 | 1 1/2-14 | **1** COUPLER | COUPLEUR<br>ACCOPPIATORE | KUPPLER<br>ACOPLADOR |
| 11* | 70919128 | 1 1/2-14 X 3/4-16 | **2** UNION | RACCORD<br>RACCORDO | VERSCHRAUBUNG<br>RACOR |

**Power Take Off Pump**
**Pompe Prise De Force**
**Zapfwelle Pumpe**
**Pompa Presa Di Potenza**
**Bomba Toma De Fuerza**

**40-135**

5-PM11-001-A

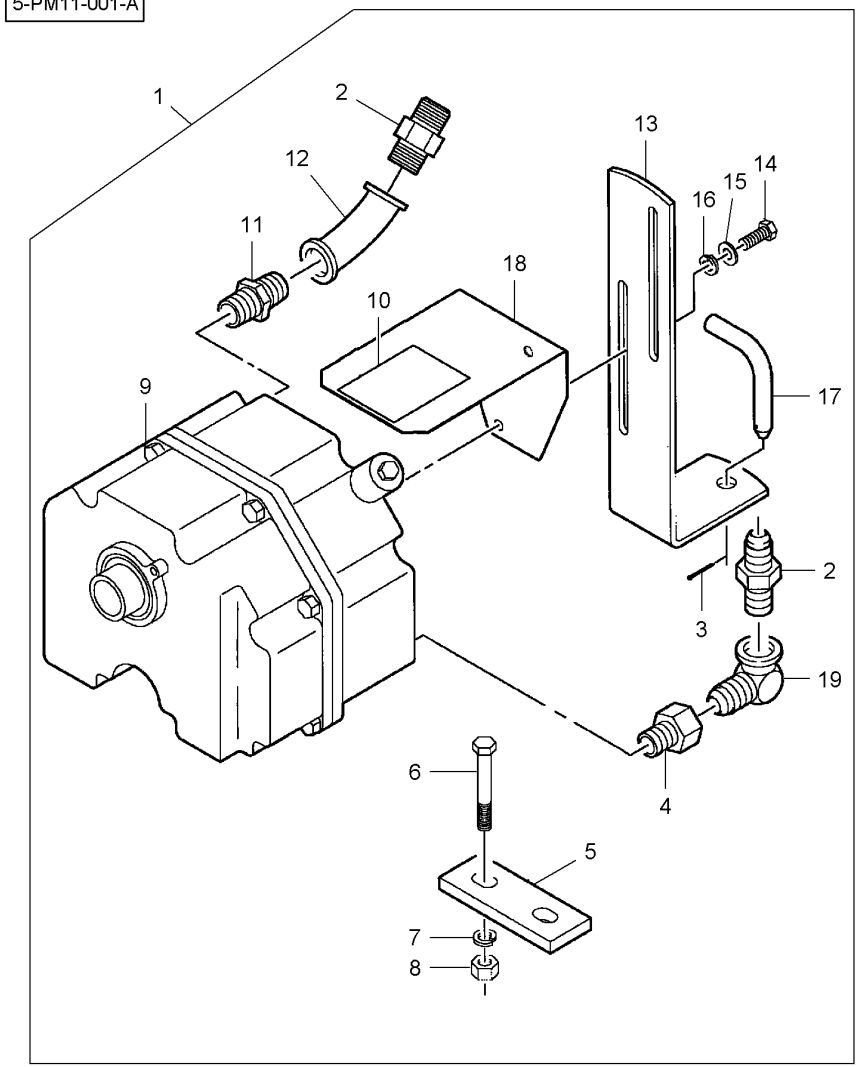


| | | | | | | |
|---|---|---|---|---|---|---|
| 1* | 2085729 | | 540 Rpm | 1 | KIT, ATTACHMENT | JEU ACCESSOIRES<br>KIT ACCESSORI | SATZ ANBAUTEILE<br>JUEGO ACCESORIO |
| 1* | 2083899 | | [A]<br>1000 Rpm | 1 | KIT, ATTACHMENT | JEU ACCESSOIRES<br>KIT ACCESSORI | SATZ ANBAUTEILE<br>JUEGO ACCESORIO |
| 1* | 6100136 | | [B]<br>1000 Rpm | 1 | KIT, ATTACHMENT | JEU ACCESSOIRES<br>KIT ACCESSORI | SATZ ANBAUTEILE<br>JUEGO ACCESORIO |
| 2* | 70919127 | 1 | | 2 | UNION | RACCORD<br>RACCORDO | VERSCHRAUBUNG<br>RACOR |
| 3* | 98-2107 | 1 | | 1 | HAIR PIN | EPINGLE<br>FORCINA | SICHERUNGSFEDER<br>RETENEDOR ELAST |
| 4* | 70901828 | 1 | | 1 | REDUCER | REDUCTEUR<br>RIDUTTORE | REDUZIERSTUECK<br>REDUCCION |
| 5* | W247282B | 1 | | 1 | PLATE | PLAQUE<br>PIASTRA | PLATTE<br>PLATO |
| 6* | 75120904 | 1 | 5/8"-11 X 4-1/2 | 2 | CAPSCREW | VIS BOUCHON<br>TAPPO A VITE | HUTSCHRAUBE<br>TORNILLO TAPON |
| 7* | 70917373 | 1 | 5/8" | 2 | LOCK WASHER | RONDELLE FREIN<br>RONDELLA ARRESTO | SICHERUNGSRING<br>ARANDELA SEGURID |
| 8* | 70932665 | 1 | 5/8"-11 | 2 | NUT UNC | ECROU UNC<br>DADO UNC | MUTTER UNC<br>TUERCA UNC |
| 9* | W247844B | 1 | 540 Rpm<br>40-140 No 1 | 1 | PUMP | POMPE<br>POMPA | PUMPE<br>BOMBA |
| 9* | W247845B | 1 | [A]<br>1000 Rpm<br>40-140 No 1 | 1 | PUMP | POMPE<br>POMPA | PUMPE<br>BOMBA |
| 9* | 855009 | 1 | [B]<br>1000 Rpm<br>40-140 No 1 | 1 | PUMP | POMPE<br>POMPA | PUMPE<br>BOMBA |
| 10* | N857035 | 1 | | 1 | DECAL | DECALCOMANIE<br>DECALCOMANIA | AUFKLEBER<br>CALCOMANIA |
| 11* | 746685 | 1 | | 1 | GREASE FITTING | GRAISSEUR<br>INGRASSATORE | DRUCKSCHMIERKOPF<br>ENGRASADOR |
| 12* | 70901693 | 1 | | 1 | ELBOW NIPPLE | RACCORD COUDE<br>NIPPLO GOMITO | WINKELSTUTZEN<br>CODO DE UNION |
| 13* | W247846B | 1 | | 1 | BRACKET | SUPPORT FIXATION<br>STAFFETTA | HALTEARM<br>SOPORTE |
| 14* | 70921210 | 1 | 3/8"-16 X 1 | 2 | BOLT UNC | BOULON UNC<br>BULLONE UNC | MASCH.SCHRB.UNC<br>PERNO UNC |
| 15* | 70918266 | 1 | 540 Rpm<br>3/8" | 2 | FLAT WASHER | RONDELLE PLATE<br>RONDELLE PIANA | UNTERLEGSCHEIBEN<br>ARANDELA PLANA |
| 15* | **Y705533** | 1 | 1000 Rpm<br>3/8" | 2 | WASHER | RONDELLE<br>RONDELLA | SCHEIBE<br>ARANDELA |
| 16* | 70916965 | 1 | 3/8" | 2 | LOCK WASHER | RONDELLE FREIN<br>RONDELLA ARRESTO | SICHERUNGSRING<br>ARANDELA SEGURID |
| 17* | W237303B | 1 | | 1 | PIN | GOUPILLE<br>COPPIGLIA | STIFT<br>PASADOR |
| 18* | 852720 | 1 | | 1 | SHIELD | TOLE<br>RIPARO | SCHILD<br>BLINDAJE |
| 18* | N857035 | 18 | | 1 | DECAL | DECALCOMANIE<br>DECALCOMANIA | AUFKLEBER<br>CALCOMANIA |
| 19* | 70919670 | 1 | | 1 | ELBOW NIPPLE | RACCORD COUDE<br>NIPPLO GOMITO | WINKELSTUTZEN<br>CODO DE UNION |

**Power Take Off Pump**
**Pompe Prise De Force**
**Zapfwelle Pumpe**
**Pompa Presa Di Potenza**
**Bomba Toma De Fuerza**

**40-135**

5-PM11-001-A

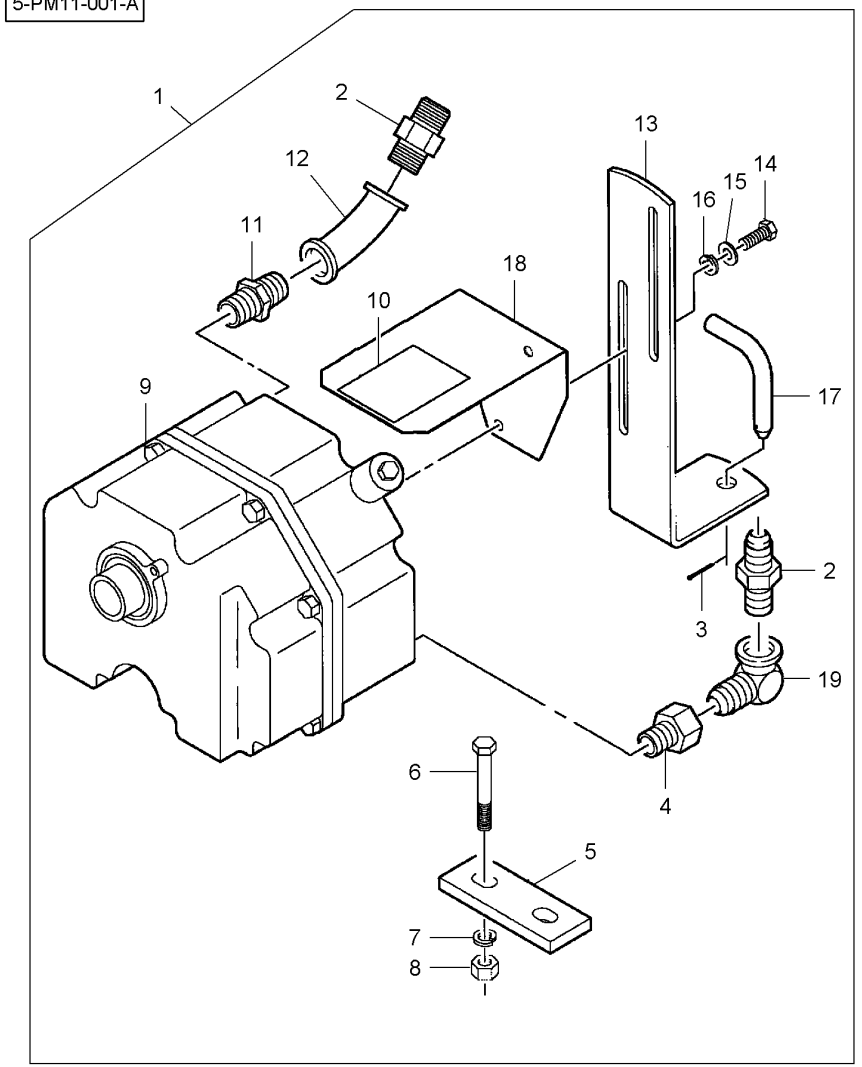


[A] 1"-3/8 SHAFT
1"-3/8 ARBRE
1"-3/8 WELLE
1"-3/8 ALBERO
1"-3/8 ARBOL

[B] 1"-3/4 SHAFT
1"-3/4 ARBRE
1"-3/4 WELLE
1"-3/4 ALBERO
1"-3/4 ARBOL

**Power Take Off Pump**
**Pompe Prise De Force**
**Zapfwelle Pumpe**
**Pompa Presa Di Potenza**
**Bomba Toma De Fuerza**

**40-140**

5-PM11-002-A

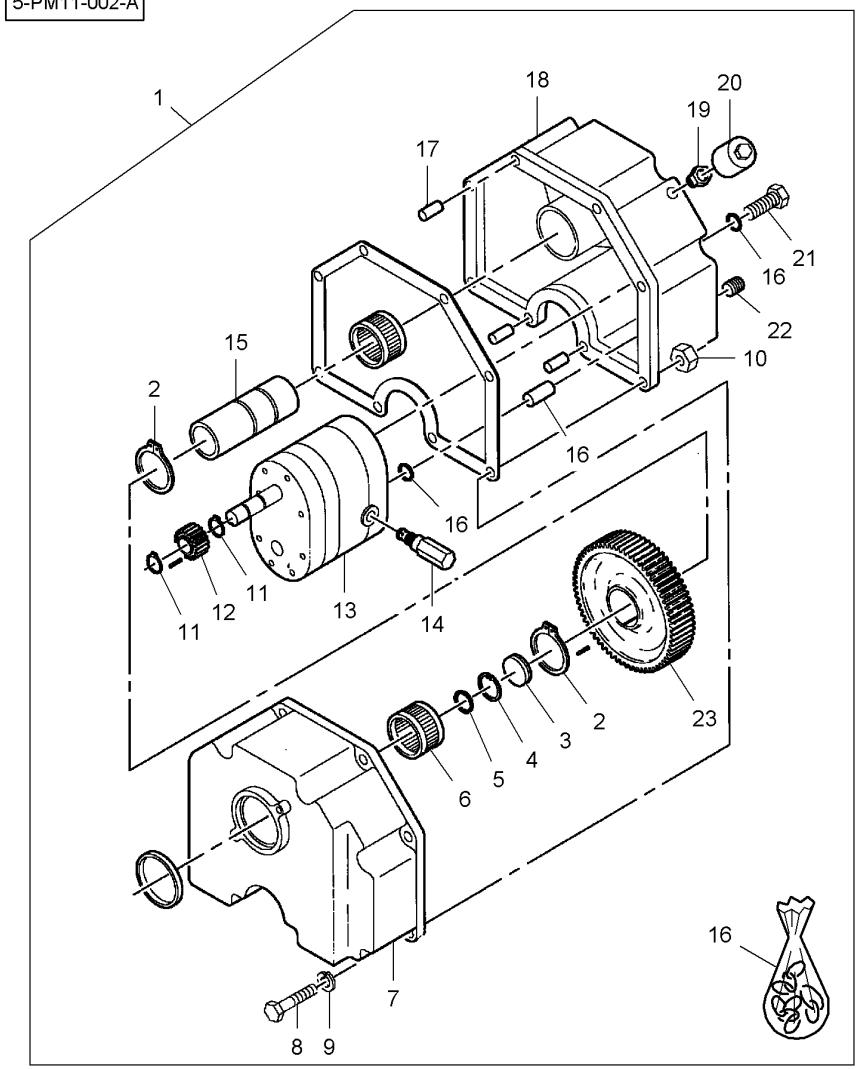


| | | | | | | |
|---|---|---|---|---|---|---|
| 1* | W247844B | | 540 Rpm | 1 | PUMP | POMPE<br>POMPA<br>PUMPE<br>BOMBA |
| 1* | W247845B | | [A]<br>1000 Rpm | 1 | PUMP | POMPE<br>POMPA<br>PUMPE<br>BOMBA |
| 1* | 855009 | | [B]<br>1000 Rpm | 1 | PUMP | POMPE<br>POMPA<br>PUMPE<br>BOMBA |
| 2* | 70927751 | 1 | | 2 | RETAINER | RETENEUR<br>FERMO<br>HALTERING<br>RETENEDOR |
| 3* | W248416B | 1 | | 1 | PLUG | BOUCHON<br>TAPPO<br>STOPFEN<br>TAPON |
| 4* | W944027 | 1 | | 1 | RING | ANNEAU<br>ANELLO<br>RING.<br>ANILLO |
| 5* | 70925638 | 1 | 540 Rpm | 1 | O RING | JOINT TORIQUE<br>GIUNTO DI TENUTA<br>O-RING<br>JUNTA TOROIDAL |
| 5* | 70924110 | 1 | 1000 Rpm | 1 | O RING | JOINT TORIQUE<br>GIUNTO DI TENUTA<br>O-RING<br>JUNTA TOROIDAL |
| 6* | 831220M1 | 1 | | 2 | BEARING | COUSSINET<br>CUSCINETTO<br>LAGER<br>COJINETE |
| 7* | W248084B | 1 | | 1 | HOUSING | CARTER<br>CARCASSA<br>GEHAEUSE<br>ALOJAMIENTO |
| 8* | 7703473 | 1 | 1/4"-20 X 1-1/4 | 6 | SCREW UNC | VIS UNC<br>VITE UNC<br>SCHRAUBE UNC<br>TORNILLO UNC |
| 9* | 705012 | 1 | 1/4" | 6 | LOCK WASHER | RONDELLE FREIN<br>RONDELLA ARRESTO<br>SICHERUNGSRING<br>ARANDELA SEGURID |
| 10* | 70916622 | 1 | 1/4"-20 | 6 | NUT UNC | ECROU UNC<br>DADO UNC<br>MUTTER UNC<br>TUERCA UNC |
| 11* | **70927732** | 1 | | 2 | SNAPRING | SEGMENT ARRET<br>ANELLO SIEGER<br>SPRENGRING<br>ANILLA RETENCION |
| 12* | W248422B | 1 | 540 Rpm<br>22 | 1 | GEAR | ENGRENAGE<br>INGRANAGGIO<br>ZAHNRAD<br>ENGRANAJE |
| 12* | W248423B | 1 | 1000 Rpm<br>32 | 1 | GEAR | ENGRENAGE<br>INGRANAGGIO<br>ZAHNRAD<br>ENGRANAJE |
| 13* | W248421B | 1 | | 1 | PUMP | POMPE<br>POMPA<br>PUMPE<br>BOMBA |
| 14* | W248420B | 1 | | 1 | VALVE | SOUPAPE<br>VALVOLA<br>VENTIL<br>VALVULA |
| 15* | W248414B | 1 | 540 Rpm | 1 | PTO SHAFT | ARBRE PTO<br>PTO ALBERO<br>PTO GELWELLE<br>EJE TDF |
| 15* | W248415B | 1 | [A]<br>1000 Rpm | 1 | PTO SHAFT | ARBRE PTO<br>PTO ALBERO<br>PTO GELWELLE<br>EJE TDF |
| 15* | N856647 | 1 | [B]<br>1000 Rpm | 1 | PTO SHAFT | ARBRE PTO<br>PTO ALBERO<br>PTO GELWELLE<br>EJE TDF |
| 16* | **W248005BS** | 1 | | 1 | KIT, SEAL | JEU ETANCHEITE<br>KIT TENUTA<br>DICHTRINGSATZ<br>RETENES JUEGO |
| 17* | W248419B | 1 | | 3 | PIN | GOUPILLE<br>COPPIGLIA<br>STIFT<br>PASADOR |
| 18* | W248085B | 1 | | 1 | HOUSING | CARTER<br>CARCASSA<br>GEHAEUSE<br>ALOJAMIENTO |
| 19* | 70922825 | 1 | | 1 | BUSH | BAGUE<br>BOCCOLA<br>RING<br>CASQUILLO |
| 20* | W248351B | 1 | | 1 | BREATHER | RENIFLARD<br>SFIATATOIO<br>ENTLUEFTER<br>RESPIRADERO |

**Power Take Off Pump**
**Pompe Prise De Force**
**Zapfwelle Pumpe**
**Pompa Presa Di Potenza**
**Bomba Toma De Fuerza**

**40-140**

5-PM11-002-A

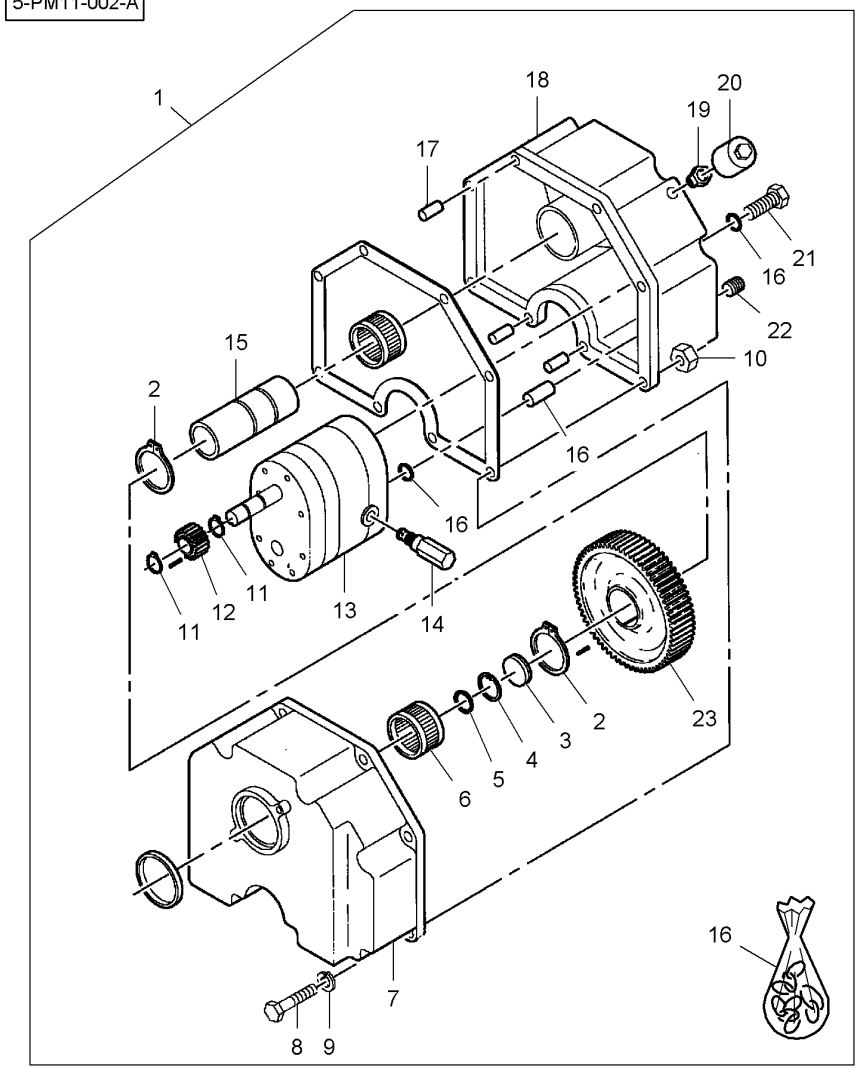


| | | | | | |
|---|---|---|---|---|---|
| 21* | 70921210 | 1 | 3/8"-16 X 1 | **4** BOLT UNC | BOULON UNC<br>BULLONE UNC | MASCH.SCHRB.UNC<br>PERNO UNC |
| 22* | W941049-2 | 1 | 3/8" | **1** PLUG | BOUCHON<br>TAPPO | STOPFEN<br>TAPON |
| 23* | W248417B | 1 | 540 Rpm<br>48 | **1** GEAR | ENGRENAGE<br>INGRANAGGIO | ZAHNRAD<br>ENGRANAJE |
| 23* | W248418B | 1 | 1000 Rpm<br>38 | **1** GEAR | ENGRENAGE<br>INGRANAGGIO | ZAHNRAD<br>ENGRANAJE |

[A] 1"-3/8 SHAFT
1"-3/8 ARBRE
1"-3/8 WELLE
1"-3/8 ALBERO
1"-3/8 ARBOL

[B] 1"-3/4 SHAFT
1"-3/4 ARBRE
1"-3/4 WELLE
1"-3/4 ALBERO
1"-3/4 ARBOL

| Hydraulic Cylinder<br>Vérin Hydraulique<br>Hydraulikzylinder<br>Martinetto Idraulico<br>Gato Hidráulico | 40-145 | Protection<br>Protection<br>Schutz<br>Protezione<br>Protección |
|---|---|---|

5-PL37-005-B

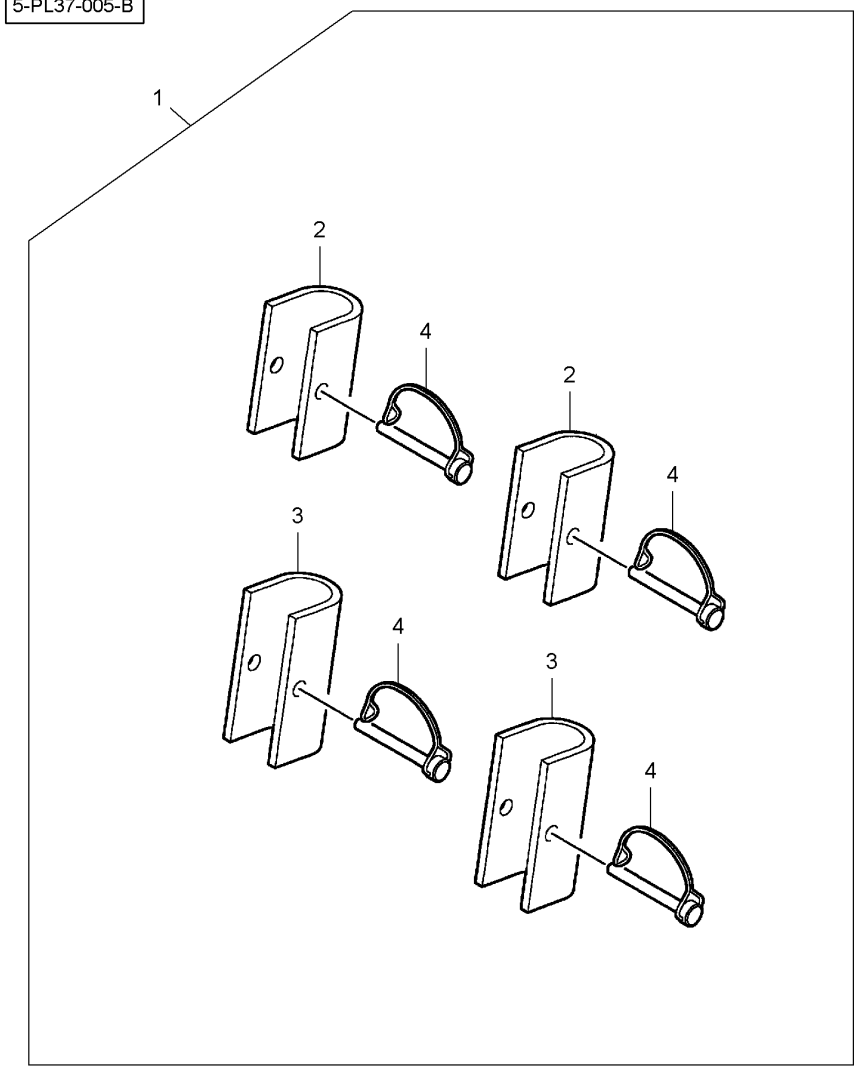


| | | | | | | |
|---|---|---|---|---|---|---|
| 1 | 2087129 | | **1** | KIT, ATTACHMENT | JEU ACCESSOIRES<br>KIT ACCESSORI | SATZ ANBAUTEILE<br>JUEGO ACCESORIO |
| 2 | W248487B | 1 ◀▶ 3"-3/4 | **2** | ARM | BRAS<br>BRACCIO | SCHARHEBEL<br>BRAZO |
| 3 | W248486B | 1 ◀▶ 4"-3/8 | **2** | ARM | BRAS<br>BRACCIO | SCHARHEBEL<br>BRAZO |
| 4 | W245430B | 1 | **4** | CLIP | PATTE D'ATTACHE<br>FERMAGLIO | SCHELLE<br>CLIP |

| Hydraulic Cylinder<br>Vérin Hydraulique<br>Hydraulikzylinder<br>Martinetto Idraulico<br>Gato Hidráulico | 40-150 | Stroke Limiter<br>Limiteur De Course<br>Hubbegrenzer<br>Limitatore Di Corsa<br>Limitador De Carrera |
|---|---|---|

5-PL37-006-B

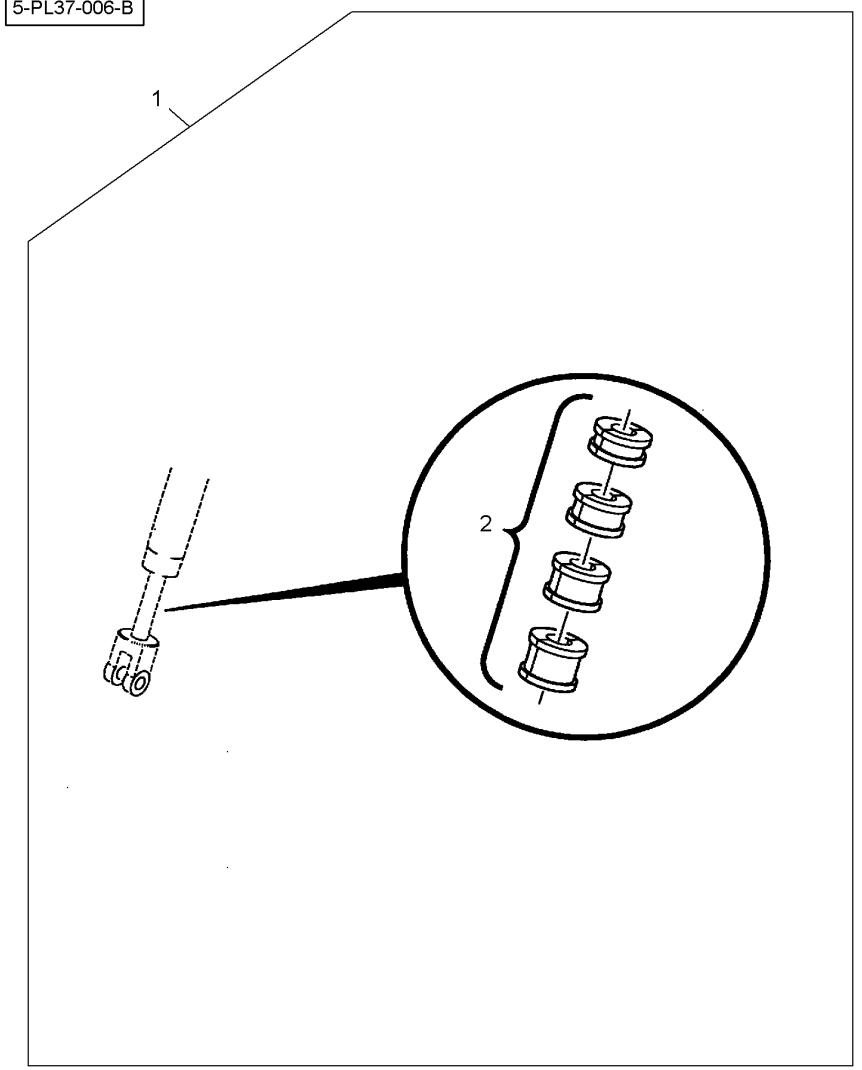


| | | | | | | |
|---|---|---|---|---|---|---|
| 1 | 6000396 | | **1** | KIT, ATTACHMENT | JEU ACCESSOIRES<br>KIT ACCESSORI | SATZ ANBAUTEILE<br>JUEGO ACCESORIO |
| 2 | FX30099 | 1 | **1** | KIT, RING | JEU SEGMENTS<br>KIT ANELLI | RINGSATZ<br>KIT ANILLO |

50

**Cooling System**
**Systeme De Refroidissement**
**Kühlsystem**
**Sistema Di Raffreddamento**
**Sistema De Refrigeración**

**50-5**

**Blower**
**Ventilateur**
**Gebläse**
**Ventilatore**
**Ventilador**

5-PL05-001-B

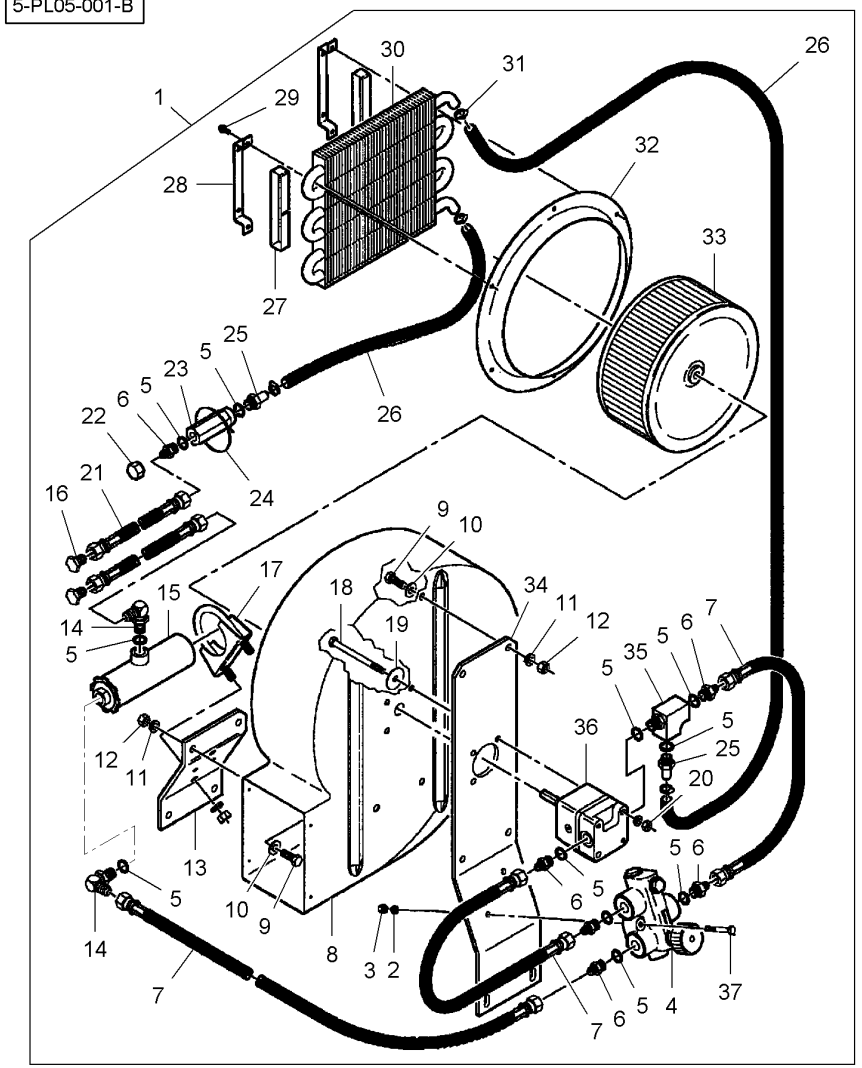


| | | | | | |
|---|---|---|---|---|---|
| 1* | 6100014 | | 1 | KIT, ATTACHMENT | JEU ACCESSOIRES<br>KIT ACCESSORI |
| 2* | 705012 | 1 1/4" | 2 | LOCK WASHER | RONDELLE FREIN<br>RONDELLA ARRESTO |
| 3* | 70916622 | 1 1/4"-20 | 2 | NUT UNC | ECROU UNC<br>DADO UNC |
| 4* | W247849B | 1 ◉ 50-10 No 1 | 1 | VALVE | SOUPAPE<br>VALVOLA |
| 5* | **7037781** | 1 | X | O RING | JOINT TORIQUE<br>GIUNTO DI TENUTA |
| 6* | 360202X91 | 1 | 7 | UNION | RACCORD<br>RACCORDO |
| 6* | **7037781** | 6 | 1 | O RING | JOINT TORIQUE<br>GIUNTO DI TENUTA |
| 7* | 852470 | 1 ◀▶ 17"-1/2 | 3 | HYDRAULIC HOSE | DURITE HYDRAULIC<br>TUBO HYDRAULICO |
| 8* | 854103 | 1 | 1 | HOUSING | CARTER<br>CARCASSA |
| 9* | 70921210 | 1 3/8"-16 X 1 | 6 | BOLT UNC | BOULON UNC<br>BULLONE UNC |
| 10* | **Y705533** | 1 3/8" | 6 | WASHER | RONDELLE<br>RONDELLA |
| 11* | 70916965 | 1 3/8" | 6 | LOCK WASHER | RONDELLE FREIN<br>RONDELLA ARRESTO |
| 12* | **70916950** | 1 3/8"-16 | 6 | NUT UNC | ECROU UNC<br>DADO UNC |
| 13* | 700159876 | 1 ▶ | 1 | BRACKET | SUPPORT FIXATION<br>STAFFETTA |
| 14* | 70923905 | 1 | 2 | ELBOW NIPPLE | RACCORD COUDE<br>NIPPLO GOMITO |
| 14* | **7037781** | 14 | 1 | O RING | JOINT TORIQUE<br>GIUNTO DI TENUTA |
| 15* | W247850B | 1 ◉ 50-20 No 1 | 1 | FILTER | FILTRE<br>FILTRO |
| 15* | **70923664** | 15 | 1 | O RING | JOINT TORIQUE<br>GIUNTO DI TENUTA |
| 16* | 7746183 | [A]<br>9/16"-18 | 2 | PLUG | BOUCHON<br>TAPPO |
| 17* | W247852B | 1 | 1 | BRACKET | SUPPORT FIXATION<br>STAFFETTA |
| 18* | 70925691 | 1 5/16"-18 X 4 | 2 | CAPSCREW | VIS BOUCHON<br>TAPPO A VITE |
| 19* | 700717618 | 1 | 2 | WASHER | RONDELLE<br>RONDELLA |
| 20* | Y704163 | 1 5/16"-18 | 2 | LOCKNUT | ECROU FREIN<br>AUTOBLOCCANTE |
| 21* | N852533 | [A]<br>◀▶ 169" | 2 | HYDRAULIC HOSE | DURITE HYDRAULIC<br>TUBO HYDRAULICO |
| 22* | 791541 | 1 9/16"-18 | 1 | CAP | CHAPEAU<br>CAPUCHON |
| 23* | 854845 | 1 | 1 | PRESSURE VALVE | VALVE<br>VALVOLA PRESSION |

| | | | | | |
|---|---|---|---|---|---|
| | | | | JEU ACCESSOIRES<br>KIT ACCESSORI | SATZ ANBAUTEILE<br>JUEGO ACCESORIO |
| | | | | RONDELLE FREIN<br>RONDELLA ARRESTO | SICHERUNGSRING<br>ARANDELA SEGURID |
| | | | | ECROU UNC<br>DADO UNC | MUTTER UNC<br>TUERCA UNC |
| | | | | SOUPAPE<br>VALVOLA | VENTIL<br>VALVULA |
| | | | | JOINT TORIQUE<br>GIUNTO DI TENUTA | O-RING<br>JUNTA TOROIDAL |
| | | | | RACCORD<br>RACCORDO | VERSCHRAUBUNG<br>RACOR |
| | | | | JOINT TORIQUE<br>GIUNTO DI TENUTA | O-RING<br>JUNTA TOROIDAL |
| | | | | DURITE HYDRAULIC<br>TUBO HYDRAULICO | HYDRAUL.SCHLAUCH<br>TUBO HYDRAULICO |
| | | | | CARTER<br>CARCASSA | GEHAEUSE<br>ALOJAMIENTO |
| | | | | BOULON UNC<br>BULLONE UNC | MASCH.SCHRB.UNC<br>PERNO UNC |
| | | | | RONDELLE<br>RONDELLA | SCHEIBE<br>ARANDELA |
| | | | | RONDELLE FREIN<br>RONDELLA ARRESTO | SICHERUNGSRING<br>ARANDELA SEGURID |
| | | | | ECROU UNC<br>DADO UNC | MUTTER UNC<br>TUERCA UNC |
| | | | | SUPPORT FIXATION<br>STAFFETTA | HALTEARM<br>SOPORTE |
| | | | | RACCORD COUDE<br>NIPPLO GOMITO | WINKELSTUTZEN<br>CODO DE UNION |
| | | | | JOINT TORIQUE<br>GIUNTO DI TENUTA | O-RING<br>JUNTA TOROIDAL |
| | | | | FILTRE<br>FILTRO | FILTER<br>FILTRO |
| | | | | JOINT TORIQUE<br>GIUNTO DI TENUTA | O-RING<br>JUNTA TOROIDAL |
| | | | | BOUCHON<br>TAPPO | STOPFEN<br>TAPON |
| | | | | SUPPORT FIXATION<br>STAFFETTA | HALTEARM<br>SOPORTE |
| | | | | VIS BOUCHON<br>TAPPO A VITE | HUTSCHRAUBE<br>TORNILLO TAPON |
| | | | | RONDELLE<br>RONDELLA | SCHEIBE<br>ARANDELA |
| | | | | ECROU FREIN<br>AUTOBLOCCANTE | SICHERUNGSMUTTER<br>CONTRATUERCA |
| | | | | DURITE HYDRAULIC<br>TUBO HYDRAULICO | HYDRAUL.SCHLAUCH<br>TUBO HYDRAULICO |
| | | | | CHAPEAU<br>CAPUCHON | KAPPE<br>TAPA |
| | | | | VALVE<br>VALVOLA PRESSION | DRUCKVENTIL<br>VALVULA PRESION |

| Cooling System<br>Systeme De Refroidissement<br>Kühlsystem<br>Sistema Di Raffreddamento<br>Sistema De Refrigeración | 50-5 | Blower<br>Ventilateur<br>Gebläse<br>Ventilatore<br>Ventilador |
|---|---|---|

5-PL05-001-B

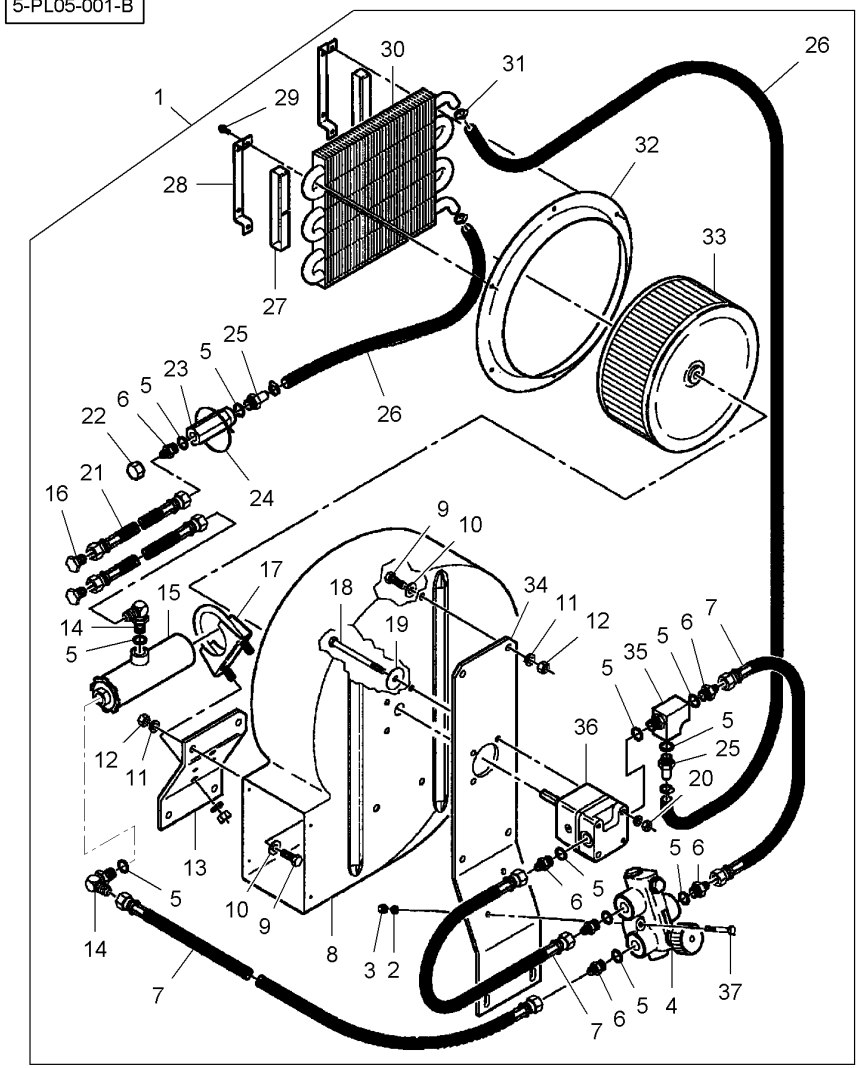


| | | | | | |
|---|---|---|---|---|---|
| 24* | 70937133 | 1 | **1** CABLE TIE | ATTACHE CABLE<br>FASCETTA CAVI | KABELBINDER<br>APRIETACABLES |
| 25* | 7792435 | 1 | **2** CONNECTOR | BORNE.<br>MORSETTO. | DOPPELNIPPEL<br>CONECTOR |
| 25* | **7037781** | 25 | **1** O RING | JOINT TORIQUE<br>GIUNTO DI TENUTA | O-RING<br>JUNTA TOROIDAL |
| 26* | W247835B | 1 | **2** HOSE | DURITE<br>TUBO FLESSIBILE | SCHLAUCH<br>TUBO DE GOMA |
| 27* | W247933B | 1 | **2** CUSHION | COUSSIN<br>CUSCINO | POLSTER<br>COJIN |
| 28* | W247853B | 1 | **2** STRAP | PATTE<br>CORREGGIA | LASCHE<br>FAJA |
| 29* | W239650B | 1 No 10 X 3/4 | **6** SCREW | VIS<br>VITE | SCHRAUBE<br>TORNILLO |
| 30* | W247834BS | 1 | **1** WARM AIR DUCTING | CONDUIT AIR<br>CONDOTTO ARIA | HEIZUNGSVERKLDG<br>CONDUC AIRE CAL |
| 31* | 70921910 | 1 | **4** HOSE CLIP | COLLIER DURITE<br>COLLARE DI TUBO | SCHLAUCHBINDER<br>ABRAZADERA TUBO |
| 32* | W247833B | 1 | **1** FLANGE | FLASQUE<br>FLANGIA | FLANSCH<br>PLETINA |
| 33* | W247819B | 1 | **1** FAN | VENTILATEUR<br>VENTILATORE | LÜFTER<br>VENTILADOR |
| 34* | 700159875 | 1 ◀ | **1** BRACKET | SUPPORT FIXATION<br>STAFFETTA | HALTEARM<br>SOPORTE |
| 35* | W247928B | 1 | **1** TEEPIECE | TE<br>RACCORDO A T | T-STUECK<br>PIEZA EN T |
| 35* | **7037781** | 35 | **1** O RING | JOINT TORIQUE<br>GIUNTO DI TENUTA | O-RING<br>JUNTA TOROIDAL |
| 36* | W247830B | 1 👁 50-15 No 1 | **1** HYDRAULIC MOTOR | MOTEUR HYDRAULIC<br>MOTORE IDRAULICO | HYDRAULIK MOTOR<br>MOTOR HIDRAULICO |
| 37* | 70921962 | 1 1/4"-20 X 1-3/4 | **2** BOLT UNC | BOULON UNC<br>BULLONE UNC | MASCH.SCHRB.UNC<br>PERNO UNC |

[A] NOT INCLUDED IN ASSEMBLY
N'EST PAS COMPRIS DANS L'ENSEMBLE
NICHT IN MONTAGEGRUPPE ENTHALTEN IST
NON E COMPRESO IN COMPLESSIVO
NO SE INCLUYE EN GRUPO MONAJE

**Valve**
**Soupape**
**Ventil**
**Valvola**
**Válvula**

**50-10**

5-PL36-001-B

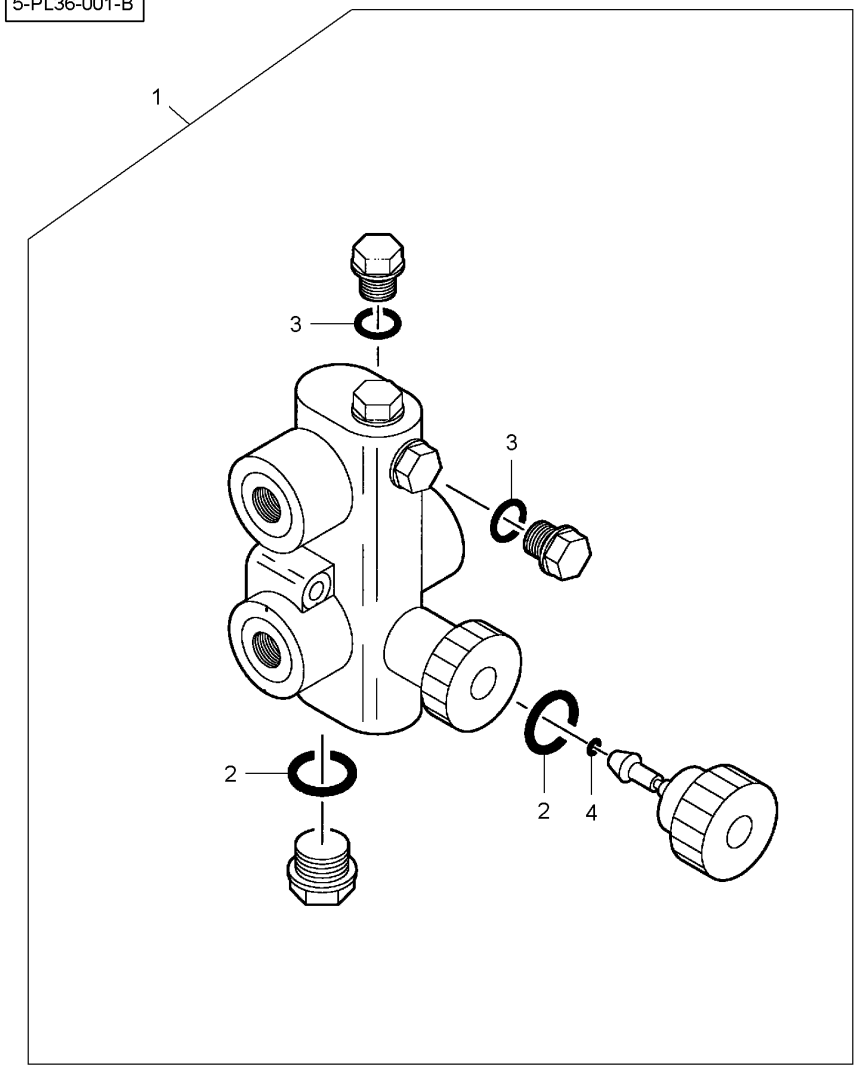


| | | | | | |
|---|---|---|---|---|---|
| 1 | W247849B | | **1** VALVE | SOUPAPE<br>VALVOLA | VENTIL<br>VALVULA |
| 2* | **W942305** | 1 | **2** O RING | JOINT TORIQUE<br>GIUNTO DI TENUTA | O-RING<br>JUNTA TOROIDAL |
| 3* | **70921885** | 1 | **2** O RING | JOINT TORIQUE<br>GIUNTO DI TENUTA | O-RING<br>JUNTA TOROIDAL |
| 4* | **70923943** | 1 | **1** O RING | JOINT TORIQUE<br>GIUNTO DI TENUTA | O-RING<br>JUNTA TOROIDAL |

**Hydraulic Motor**
**Moteur Hydraulique**
**Hydraulik Motor**
**Motore Idraulico**
**Motor Hidráulico**

**50-15**

5-PM10-001-A

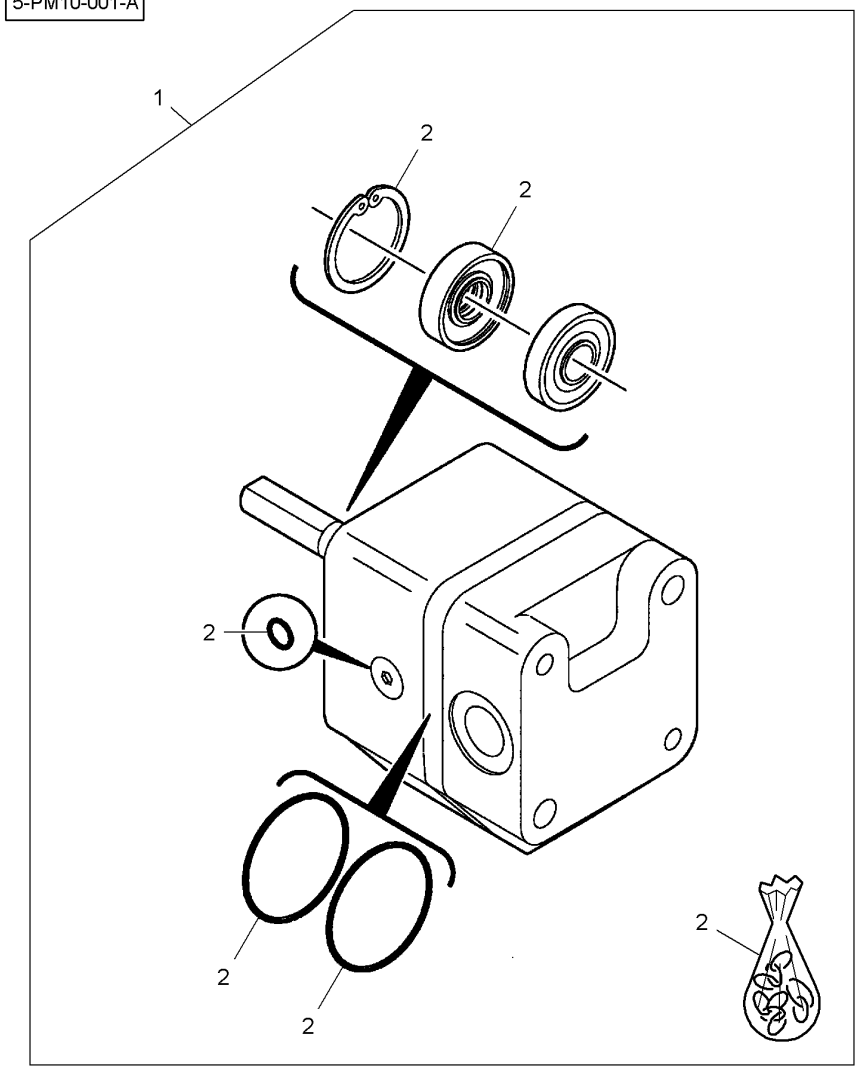


| | | | | | |
|---|---|---|---|---|---|
| 1* | W247830B | | **1** | HYDRAULIC MOTOR | MOTEUR HYDRAULIC<br>MOTORE IDRAULICO | HYDRAULIK MOTOR<br>MOTOR HIDRAULICO |
| 2* | **700723299** | 1 | **1** | KIT, SEAL | JEU ETANCHEITE<br>KIT TENUTA | DICHTRINGSATZ<br>RETENES JUEGO |

**Oil Filter**
**Filtre A Huile**
**Olfilter**
**Filtro Per Olio**
**Filtro De Aceite**

**50-20**

5-PL20-001-B

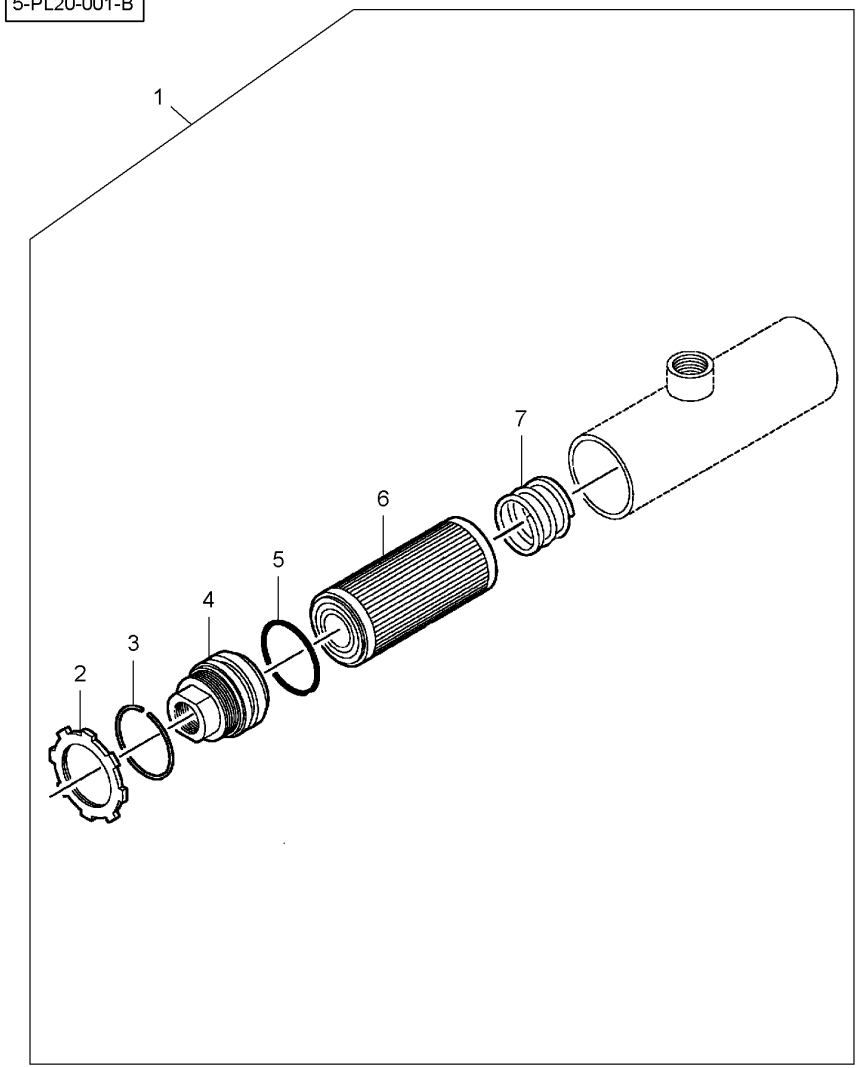


| | | | | | |
|---|---|---|---|---|---|
| 1 | W247850B | | **1** FILTER | FILTRE<br>FILTRO | FILTER<br>FILTRO |
| 2* | 851192 | 1 | **1** NUT | ECROU<br>DADO | MUTTER<br>TUERCA |
| 3* | 851189 | 1 | **1** RING | ANNEAU<br>ANELLO | RING.<br>ANILLO |
| 4* | 851191 | 1 | **1** FILTER HEAD | TETE DE FILTRE<br>TESTA FILTRO | FILTERKOPF<br>CABEZA DE FILTRO |
| 5* | **70923664** | 1 | **1** O RING | JOINT TORIQUE<br>GIUNTO DI TENUTA | O-RING<br>JUNTA TOROIDAL |
| 6* | **W247851BS** | 1 | **1** FILTER ELEMENT. | ELEMENT D FILTRE<br>CARTUCCIA FILTRO | FILTERELEMENT<br>CARTUCHO FILTRO |
| 6* | **70923664** | 6 | **1** O RING | JOINT TORIQUE<br>GIUNTO DI TENUTA | O-RING<br>JUNTA TOROIDAL |
| 7* | 851190 | 1 | **1** SPRING | RESSORT<br>MOLLA | FEDER<br>MUELLE |

| Blower<br>Ventilateur<br>Gebläse<br>Ventilatore<br>Ventilador | 50-25 | Protection<br>Protection<br>Schutz<br>Protezione<br>Protección |
|---|---|---|

5-PL75-002-B

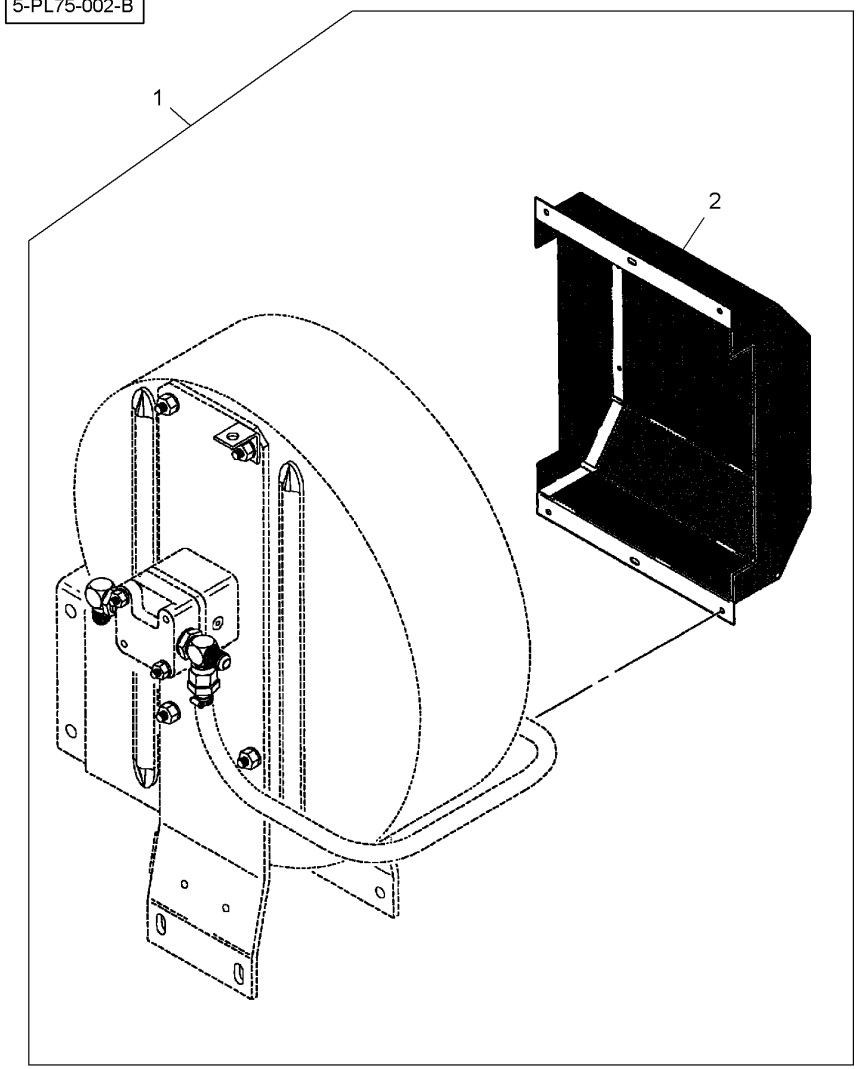


| | | | | | |
|---|---|---|---|---|---|
| 1 | 6100052 | | **1** KIT, ATTACHMENT | JEU ACCESSOIRES<br>KIT ACCESSORI | SATZ ANBAUTEILE<br>JUEGO ACCESORIO |
| 2 | 852842 | 1 | **1** FRONT GRILLE | CALANDRE<br>GRIGLIA | GRILLZARGE<br>CALANDRA |

**Air Manifolds**
**Collecteurs D'Air**
**Luftsammelkanäle**
**Collettori Di Aria**
**Colectores De Aire**

**50-30**

**3 Rows With 1,5 M Spacing**
**3 Rangs Avec Espacement 1,5 M**
**3 Reihe Mit Abstand 1,5 M**
**3 Lineas Con Distanziamento 1,5 M**
**3 Lineas Con Espaciamiento 1,5 M**

5-PL40-001-B

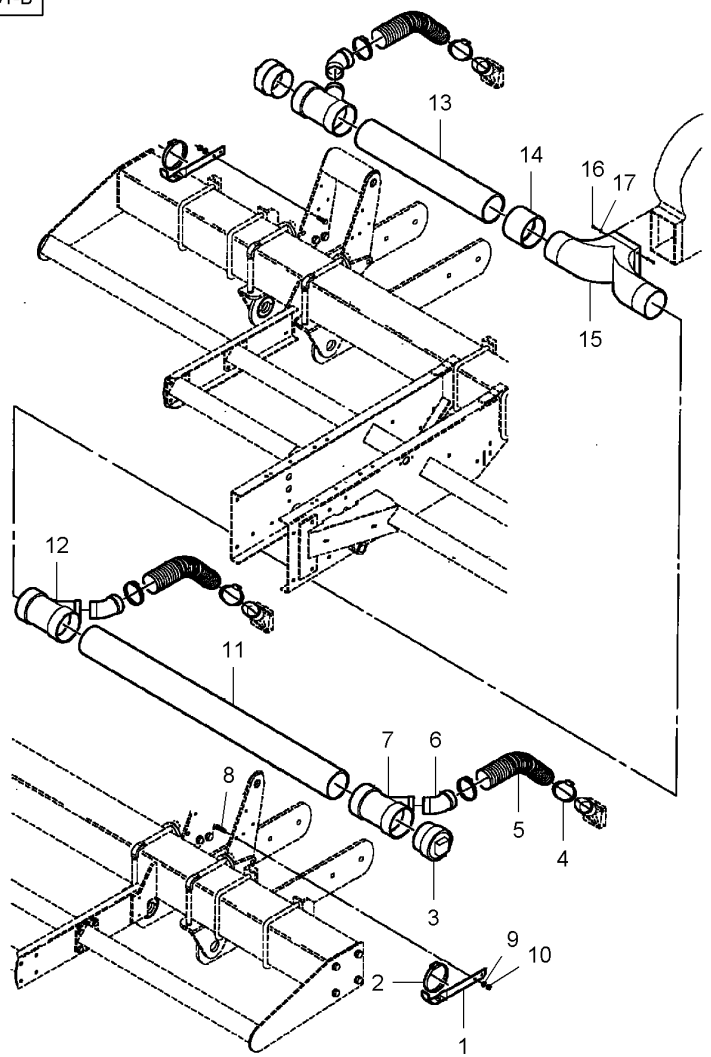


| | | | | | | |
|---|---|---|---|---|---|---|
| 1 | 852214 | | 2 | SUPPORT | SUPPORT<br>SOPPORTO | TRAGER<br>SOPORTE |
| 2 | 7720089 | | 2 | HOSE CLIP | COLLIER DURITE<br>COLLARE DI TUBO | SCHLAUCHBINDER<br>ABRAZADERA TUBO |
| 3 | W248133B | 4" | 2 | PLUG | BOUCHON<br>TAPPO | STOPFEN<br>TAPON |
| 4 | 720649 | | 6 | HOSE CLIP | COLLIER DURITE<br>COLLARE DI TUBO | SCHLAUCHBINDER<br>ABRAZADERA TUBO |
| 5* | **N857650** | ◀▶ 20" | 3 | HOSE | DURITE<br>TUBO FLESSIBILE | SCHLAUCH<br>TUBO DE GOMA |
| 6 | 852866 | | 3 | ELBOW | COUDE<br>GOMITO | WINKELSTUECK<br>CODO |
| 7* | **W247838B** | | 2 | PIPE | TUYAU<br>TUBO | TUBE<br>TUBO |
| 8 | 70920415 | 3/8"-16 X 1-1/4 | 4 | BOLT UNC | BOULON UNC<br>BULLONE UNC | MASCH.SCHRB.UNC<br>PERNO UNC |
| 9 | 70916965 | 3/8" | 4 | LOCK WASHER | RONDELLE FREIN<br>RONDELLA ARRESTO | SICHERUNGSRING<br>ARANDELA SEGURID |
| 10 | **70916950** | 3/8"-16 | 4 | NUT UNC | ECROU UNC<br>DADO UNC | MUTTER UNC<br>TUERCA UNC |
| 11* | 854749 | ◀▶ 51" | 1 | AIR DUCT | CONDUIT D'AIR<br>AIR DUCT | LUFTFUEHRUNG<br>AIR DUCT |
| 12* | W247941B | | 1 | PIPE | TUYAU<br>TUBO | TUBE<br>TUBO |
| 13* | 855552 | ◀▶ 26" | 1 | AIR DUCT | CONDUIT D'AIR<br>AIR DUCT | LUFTFUEHRUNG<br>AIR DUCT |
| 14* | W248131B | 4" | 1 | COUPLER | COUPLEUR<br>ACCOPPIATORE | KUPPLER<br>ACOPLADOR |
| 15* | W247837B | | 1 | WARM AIR DUCTING | CONDUIT AIR<br>CONDOTTO ARIA | HEIZUNGSVERKLDG<br>CONDUC AIRE CAL |
| 16* | W239650B | No 10 X 3/4 | 4 | SCREW | VIS<br>VITE | SCHRAUBE<br>TORNILLO |
| 17* | 353769X1 | 1/4" | 4 | WASHER | RONDELLE<br>RONDELLA | SCHEIBE<br>ARANDELA |

| Air Manifolds<br>Collecteurs D'Air<br>Luftsammelkanäle<br>Collettori Di Aria<br>Colectores De Aire | 50-35 | 3 Rows With 2,3 M Spacing<br>3 Rangs Avec Espacement 2,3 M<br>3 Reihe Mit Abstand 2,3 M<br>3 Lineas Con Distanziamento 2,3 M<br>3 Lineas Con Espaciamiento 2,3 M |
|---|---|---|

5-PL40-002-B

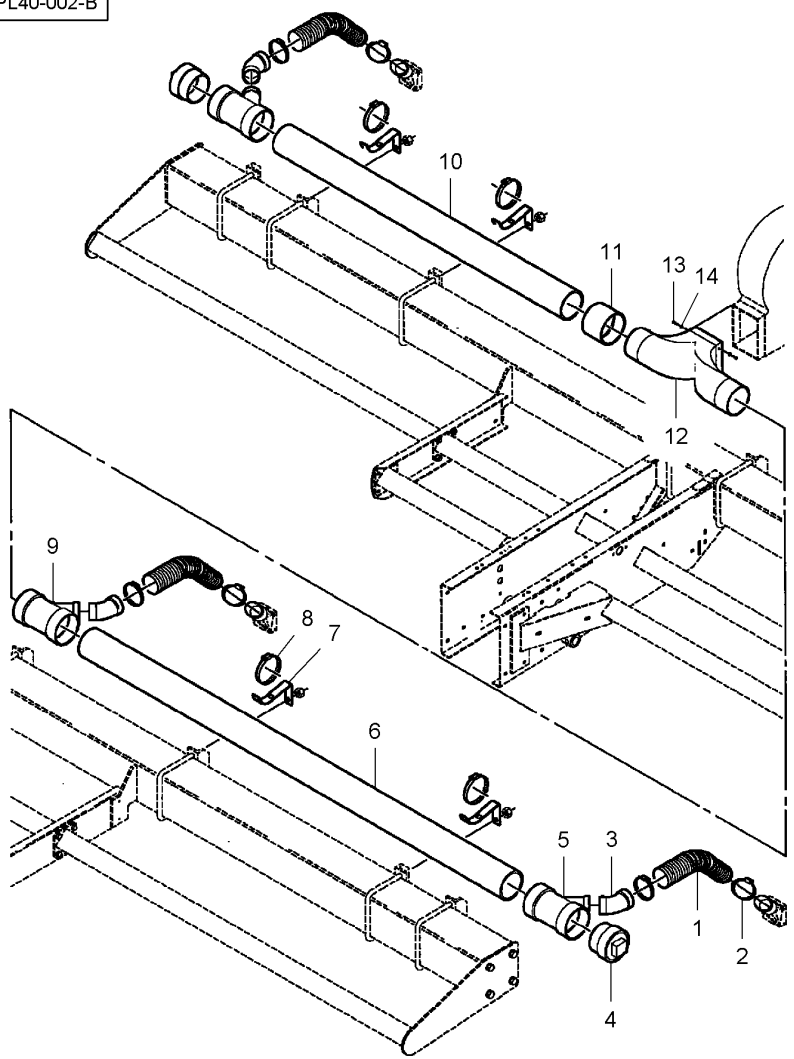


| | | | | | | |
|---|---|---|---|---|---|---|
| 1 | **N857650** | ◀▶ 20" | **3** | HOSE | DURITE<br>TUBO FLESSIBILE | SCHLAUCH<br>TUBO DE GOMA |
| 2 | 720649 | | **6** | HOSE CLIP | COLLIER DURITE<br>COLLARE DI TUBO | SCHLAUCHBINDER<br>ABRAZADERA TUBO |
| 3 | 852866 | | **3** | ELBOW | COUDE<br>GOMITO | WINKELSTUECK<br>CODO |
| 4 | W248133B | | **2** | PLUG | BOUCHON<br>TAPPO | STOPFEN<br>TAPON |
| 5 | **W247838B** | | **2** | PIPE | TUYAU<br>TUBO | TUBE<br>TUBO |
| 6* | N857321 | ◀▶ 86"-1/2 | **1** | DUCT | CONDUIT<br>CONDOTTO | DURCHFUEHRUNG<br>CONDUCTO DE AIRE |
| 7* | 852215 | | **4** | SUPPORT | SUPPORT<br>SOPPORTO | TRAGER<br>SOPORTE |
| 8 | 7720089 | | **4** | HOSE CLIP | COLLIER DURITE<br>COLLARE DI TUBO | SCHLAUCHBINDER<br>ABRAZADERA TUBO |
| 9 | W247941B | | **1** | PIPE | TUYAU<br>TUBO | TUBE<br>TUBO |
| 10* | N857322 | ◀▶ 59" | **1** | WARM AIR DUCTING | CONDUIT AIR<br>CONDOTTO ARIA | HEIZUNGSVERKLDG<br>CONDUC AIRE CAL |
| 11* | W248131B | | **1** | COUPLER | COUPLEUR<br>ACCOPPIATORE | KUPPLER<br>ACOPLADOR |
| 12* | W247837B | | **1** | WARM AIR DUCTING | CONDUIT AIR<br>CONDOTTO ARIA | HEIZUNGSVERKLDG<br>CONDUC AIRE CAL |
| 13* | W239650B | No 10 X 3/4 | **4** | SCREW | VIS<br>VITE | SCHRAUBE<br>TORNILLO |
| 14* | 353769X1 | 1/4" | **4** | WASHER | RONDELLE<br>RONDELLA | SCHEIBE<br>ARANDELA |

| Air Manifolds<br>Collecteurs D'Air<br>Luftsammelkanäle<br>Collettori Di Aria<br>Colectores De Aire | 50-40 | 4 Row<br>4 Rangs<br>4 Reihes<br>4 Lineas<br>4 Lineas |
|---|---|---|

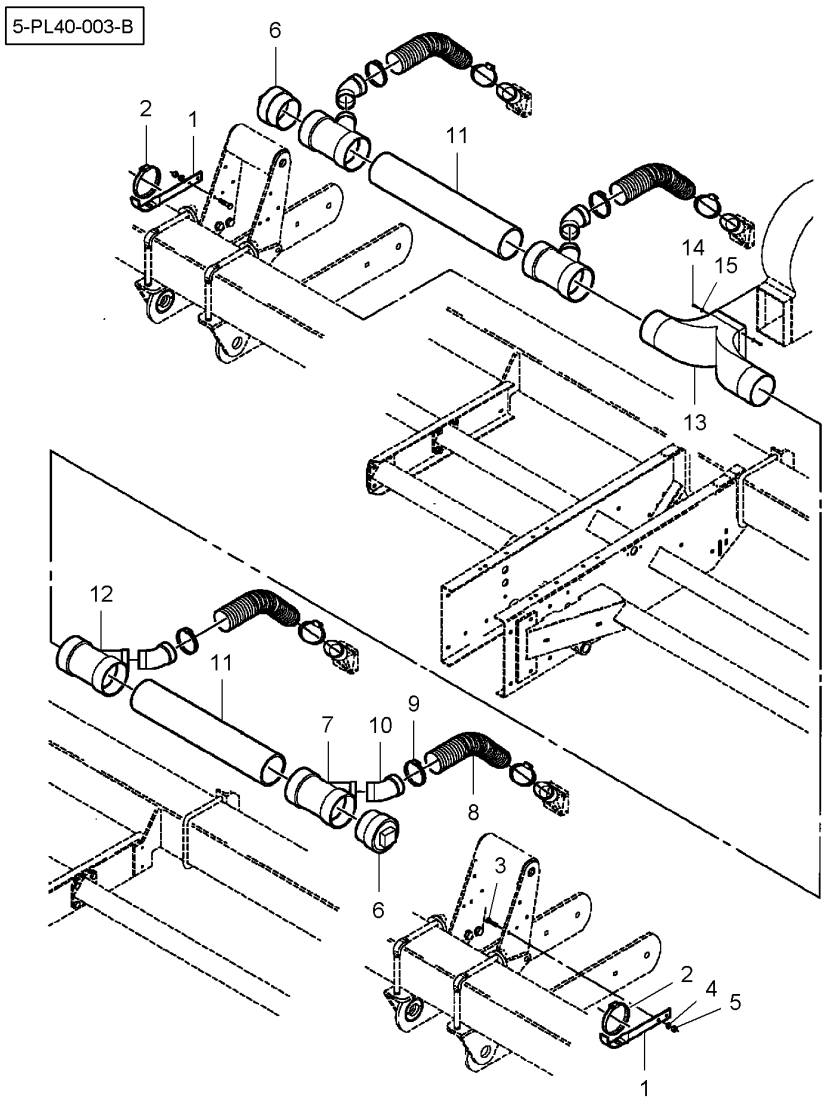


| | | | | | | |
|---|---|---|---|---|---|---|
| 1 | 852214 | | 2 | SUPPORT | SUPPORT<br>SOPPORTO | TRAGER<br>SOPORTE |
| 2* | 7720089 | | 2 | HOSE CLIP | COLLIER DURITE<br>COLLARE DI TUBO | SCHLAUCHBINDER<br>ABRAZADERA TUBO |
| 3 | 70921969 | 3/8"-16 X 1-1/2 | 4 | BOLT UNC | BOULON UNC<br>BULLONE UNC | MASCH.SCHRB.UNC<br>PERNO UNC |
| 4* | 70916965 | 3/8" | 4 | LOCK WASHER | RONDELLE FREIN<br>RONDELLA ARRESTO | SICHERUNGSRING<br>ARANDELA SEGURID |
| 5* | **70916950** | 3/8"-16 | 4 | NUT UNC | ECROU UNC<br>DADO UNC | MUTTER UNC<br>TUERCA UNC |
| 6 | W248133B | | 2 | PLUG | BOUCHON<br>TAPPO | STOPFEN<br>TAPON |
| 7 | **W247838B** | | 3 | PIPE | TUYAU<br>TUBO | TUBE<br>TUBO |
| 8 | **N857650** | ◀▶ 20" | 4 | HOSE | DURITE<br>TUBO FLESSIBILE | SCHLAUCH<br>TUBO DE GOMA |
| 9 | 720649 | | 8 | HOSE CLIP | COLLIER DURITE<br>COLLARE DI TUBO | SCHLAUCHBINDER<br>ABRAZADERA TUBO |
| 10 | 852866 | | 4 | ELBOW | COUDE<br>GOMITO | WINKELSTUECK<br>CODO |
| 11* | W247839B | ◀▶ 24" | 2 | WARM AIR DUCTING | CONDUIT AIR<br>CONDOTTO ARIA | HEIZUNGSVERKLDG<br>CONDUC AIRE CAL |
| 12* | W247941B | | 1 | PIPE | TUYAU<br>TUBO | TUBE<br>TUBO |
| 13 | W247837B | | 1 | WARM AIR DUCTING | CONDUIT AIR<br>CONDOTTO ARIA | HEIZUNGSVERKLDG<br>CONDUC AIRE CAL |
| 14 | W239650B | No 10 X 3/4 | 4 | SCREW | VIS<br>VITE | SCHRAUBE<br>TORNILLO |
| 15 | 353769X1 | 1/4" | 4 | WASHER | RONDELLE<br>RONDELLA | SCHEIBE<br>ARANDELA |

| Air Manifolds<br>Collecteurs D'Air<br>Luftsammelkanäle<br>Collettori Di Aria<br>Colectores De Aire | 50-45 | 6 Rows - Left Side<br>6 Rangs - Cote Gauche<br>6 Reihen - Linke Seite<br>6 Lineas - Lato Sinistro<br>6 Lineas - Lado Izquierdo |
|---|---|---|

5-PL40-004-B

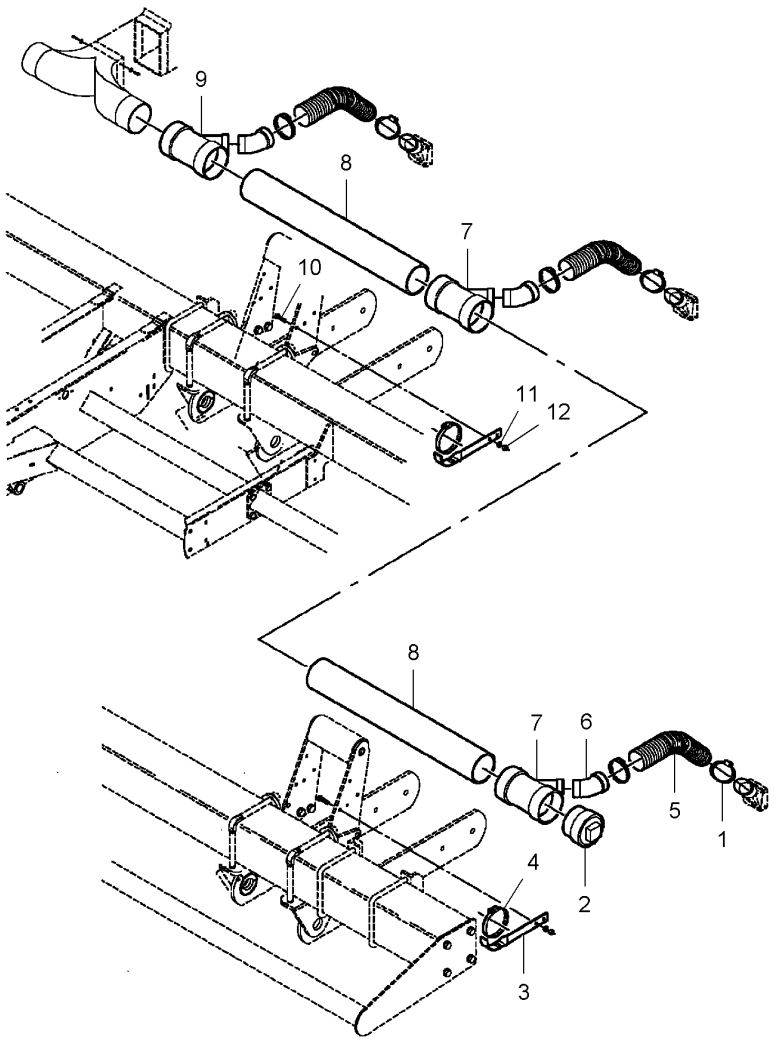


| | | | | | |
|---|---|---|---|---|---|
| 1 | 720649 | | **6** HOSE CLIP | COLLIER DURITE<br>COLLARE DI TUBO | SCHLAUCHBINDER<br>ABRAZADERA TUBO |
| 2 | W248133B | | **1** PLUG | BOUCHON<br>TAPPO | STOPFEN<br>TAPON |
| 3 | 852214 | | **2** SUPPORT | SUPPORT<br>SOPPORTO | TRAGER<br>SOPORTE |
| 4 | 7720089 | | **2** HOSE CLIP | COLLIER DURITE<br>COLLARE DI TUBO | SCHLAUCHBINDER<br>ABRAZADERA TUBO |
| 5 | **N857650** | ◀▶ 20" | **3** HOSE | DURITE<br>TUBO FLESSIBILE | SCHLAUCH<br>TUBO DE GOMA |
| 6 | 852866 | | **3** ELBOW | COUDE<br>GOMITO | WINKELSTUECK<br>CODO |
| 7 | **W247838B** | | **2** PIPE | TUYAU<br>TUBO | TUBE<br>TUBO |
| 8 | W247840B | ◀▶ 32" | **2** WARM AIR DUCTING | CONDUIT AIR<br>CONDOTTO ARIA | HEIZUNGSVERKLDG<br>CONDUC AIRE CAL |
| 9 | W247941B | | **1** PIPE | TUYAU<br>TUBO | TUBE<br>TUBO |
| 10 | 70921969 | 3/8"-16 X 1-1/2 | **4** BOLT UNC | BOULON UNC<br>BULLONE UNC | MASCH.SCHRB.UNC<br>PERNO UNC |
| 11* | 70916965 | 3/8" | **4** LOCK WASHER | RONDELLE FREIN<br>RONDELLA ARRESTO | SICHERUNGSRING<br>ARANDELA SEGURID |
| 12* | **70916950** | 3/8"-16 | **4** NUT UNC | ECROU UNC<br>DADO UNC | MUTTER UNC<br>TUERCA UNC |

| Air Manifolds<br>Collecteurs D'Air<br>Luftsammelkanäle<br>Collettori Di Aria<br>Colectores De Aire | 50-50 | 6 Rows - Right Side<br>6 Rangs - Cote Droit<br>6 Reihen - Rechte Seite<br>6 Lineas - Lato Destro<br>6 Lineas - Lado Derecho |
|---|---|---|

5-PL40-005-B

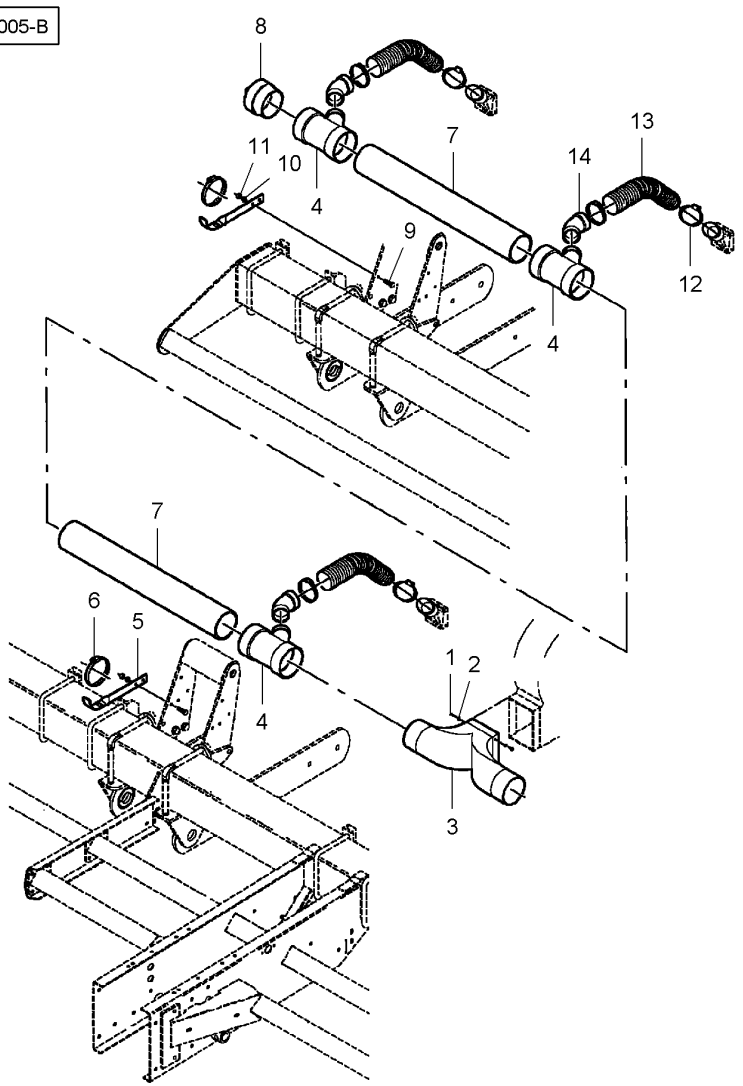


| | | | | | | |
|---|---|---|---|---|---|---|
| 1 | W239650B | No 10 X 3/4 | 4 | SCREW | VIS<br>VITE | SCHRAUBE<br>TORNILLO |
| 2 | 353769X1 | 1/4" | 4 | WASHER | RONDELLE<br>RONDELLA | SCHEIBE<br>ARANDELA |
| 3 | W247837B | | 1 | WARM AIR DUCTING | CONDUIT AIR<br>CONDOTTO ARIA | HEIZUNGSVERKLDG<br>CONDUC AIRE CAL |
| 4* | **W247838B** | | 3 | PIPE | TUYAU<br>TUBO | TUBE<br>TUBO |
| 5* | 852214 | | 2 | SUPPORT | SUPPORT<br>SOPPORTO | TRAGER<br>SOPORTE |
| 6* | 7720089 | | 2 | HOSE CLIP | COLLIER DURITE<br>COLLARE DI TUBO | SCHLAUCHBINDER<br>ABRAZADERA TUBO |
| 7* | W247840B | ◀▶ 32" | 2 | WARM AIR DUCTING | CONDUIT AIR<br>CONDOTTO ARIA | HEIZUNGSVERKLDG<br>CONDUC AIRE CAL |
| 8* | W248133B | | 1 | PLUG | BOUCHON<br>TAPPO | STOPFEN<br>TAPON |
| 9* | 70921969 | 3/8"-16 X 1-1/2 | 4 | BOLT UNC | BOULON UNC<br>BULLONE UNC | MASCH.SCHRB.UNC<br>PERNO UNC |
| 10* | 70916965 | 3/8" | 4 | LOCK WASHER | RONDELLE FREIN<br>RONDELLA ARRESTO | SICHERUNGSRING<br>ARANDELA SEGURID |
| 11* | **70916950** | 3/8"-16 | 4 | NUT UNC | ECROU UNC<br>DADO UNC | MUTTER UNC<br>TUERCA UNC |
| 12* | 720649 | | 6 | HOSE CLIP | COLLIER DURITE<br>COLLARE DI TUBO | SCHLAUCHBINDER<br>ABRAZADERA TUBO |
| 13* | **N857650** | ◀▶ 20" | 3 | HOSE | DURITE<br>TUBO FLESSIBILE | SCHLAUCH<br>TUBO DE GOMA |
| 14* | 852866 | | 3 | ELBOW | COUDE<br>GOMITO | WINKELSTUECK<br>CODO |

| Air Manifolds<br>Collecteurs D'Air<br>Luftsammelkanäle<br>Collettori Di Aria<br>Colectores De Aire | 50-55 | 8 Rows - Left Side<br>8 Rangs - Cote Gauche<br>8 Reihen - Linke Seite<br>8 Lineas - Lato Sinistro<br>8 Lineas - Lado Izquierdo |
|---|---|---|

5-PL40-006-B

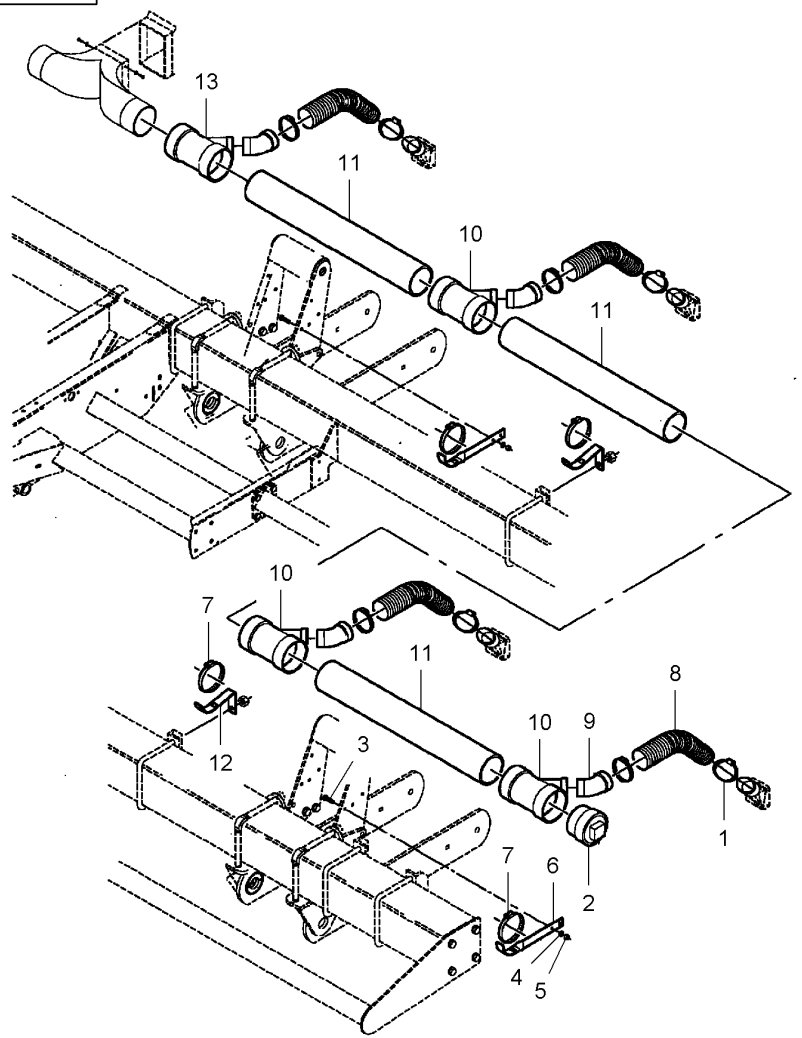


| | | | | | | |
|---|---|---|---|---|---|---|
| 1 | 720649 | | **8** | HOSE CLIP | COLLIER DURITE<br>COLLARE DI TUBO | SCHLAUCHBINDER<br>ABRAZADERA TUBO |
| 2 | W248133B | | **1** | PLUG | BOUCHON<br>TAPPO | STOPFEN<br>TAPON |
| 3* | 70921969 | 3/8"-16 X 1-1/2 | **4** | BOLT UNC | BOULON UNC<br>BULLONE UNC | MASCH.SCHRB.UNC<br>PERNO UNC |
| 4* | 70916965 | 3/8" | **4** | LOCK WASHER | RONDELLE FREIN<br>RONDELLA ARRESTO | SICHERUNGSRING<br>ARANDELA SEGURID |
| 5* | **70916950** | 3/8"-16 | **4** | NUT UNC | ECROU UNC<br>DADO UNC | MUTTER UNC<br>TUERCA UNC |
| 6* | 852214 | | **2** | SUPPORT | SUPPORT<br>SOPPORTO | TRAGER<br>SOPORTE |
| 7* | 7720089 | | **4** | HOSE CLIP | COLLIER DURITE<br>COLLARE DI TUBO | SCHLAUCHBINDER<br>ABRAZADERA TUBO |
| 8* | **N857650** | ◀▶ 20" | **4** | HOSE | DURITE<br>TUBO FLESSIBILE | SCHLAUCH<br>TUBO DE GOMA |
| 9* | 852866 | | **4** | ELBOW | COUDE<br>GOMITO | WINKELSTUECK<br>CODO |
| 10* | **W247838B** | | **3** | PIPE | TUYAU<br>TUBO | TUBE<br>TUBO |
| 11* | W247840B | ◀▶ 32" | **3** | WARM AIR DUCTING | CONDUIT AIR<br>CONDOTTO ARIA | HEIZUNGSVERKLDG<br>CONDUC AIRE CAL |
| 12* | 852215 | | **2** | SUPPORT | SUPPORT<br>SOPPORTO | TRAGER<br>SOPORTE |
| 13* | W247941B | | **1** | PIPE | TUYAU<br>TUBO | TUBE<br>TUBO |

**Air Manifolds**
**Collecteurs D'Air**
**Luftsammelkanäle**
**Collettori Di Aria**
**Colectores De Aire**

**50-60**

**8 Rows - Right Side**
**8 Rangs - Cote Droit**
**8 Reihen - Rechte Seite**
**8 Lineas - Lato Destro**
**8 Lineas - Lado Derecho**

5-PL40-007-B

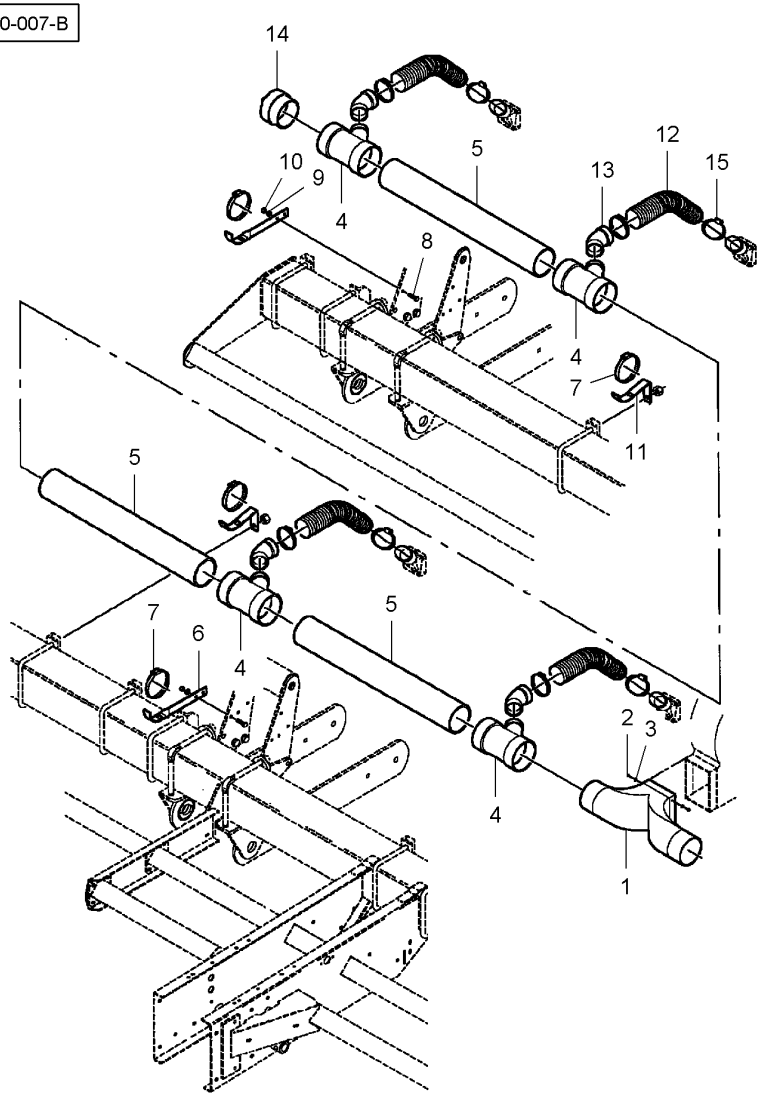


| | | | | | |
|---|---|---|---|---|---|
| 1* | W247837B | | **1** | WARM AIR DUCTING | CONDUIT AIR<br>CONDOTTO ARIA | HEIZUNGSVERKLDG<br>CONDUC AIRE CAL |
| 2* | W239650B | No 10 X 3/4 | **4** | SCREW | VIS<br>VITE | SCHRAUBE<br>TORNILLO |
| 3 | 353769X1 | 1/4" | **4** | WASHER | RONDELLE<br>RONDELLA | SCHEIBE<br>ARANDELA |
| 4* | **W247838B** | | **4** | PIPE | TUYAU<br>TUBO | TUBE<br>TUBO |
| 5* | W247840B | | **3** | WARM AIR DUCTING | CONDUIT AIR<br>CONDOTTO ARIA | HEIZUNGSVERKLDG<br>CONDUC AIRE CAL |
| 6* | 852214 | 4 X 32" | **2** | SUPPORT | SUPPORT<br>SOPPORTO | TRAGER<br>SOPORTE |
| 7* | 7720089 | | **2** | HOSE CLIP | COLLIER DURITE<br>COLLARE DI TUBO | SCHLAUCHBINDER<br>ABRAZADERA TUBO |
| 8* | 70921969 | 3/8"-16 X 1-1/2 | **4** | BOLT UNC | BOULON UNC<br>BULLONE UNC | MASCH.SCHRB.UNC<br>PERNO UNC |
| 9* | 70916965 | 3/8" | **4** | LOCK WASHER | RONDELLE FREIN<br>RONDELLA ARRESTO | SICHERUNGSRING<br>ARANDELA SEGURID |
| 10* | **70916950** | 3/8"-16 | **4** | NUT UNC | ECROU UNC<br>DADO UNC | MUTTER UNC<br>TUERCA UNC |
| 11* | 852215 | | **2** | SUPPORT | SUPPORT<br>SOPPORTO | TRAGER<br>SOPORTE |
| 12* | **N857650** | ◄► 20" | **4** | HOSE | DURITE<br>TUBO FLESSIBILE | SCHLAUCH<br>TUBO DE GOMA |
| 13* | 852866 | | **4** | ELBOW | COUDE<br>GOMITO | WINKELSTUECK<br>CODO |
| 14* | W248133B | | **1** | PLUG | BOUCHON<br>TAPPO | STOPFEN<br>TAPON |
| 15* | 720649 | | **8** | HOSE CLIP | COLLIER DURITE<br>COLLARE DI TUBO | SCHLAUCHBINDER<br>ABRAZADERA TUBO |

| Air Manifolds<br>Collecteurs D'Air<br>Luftsammelkanäle<br>Collettori Di Aria<br>Colectores De Aire | 50-65 | 12 Narrow Rows - Left Side<br>12 Rangs Etroits - Cote Gauche<br>12 Enge Reihen - Linke Seite<br>12 Lineas Stretti - Lato Sinistro<br>12 Lineas Estrechos - Lado Izquierdo |
|---|---|---|

5-PL40-011-A

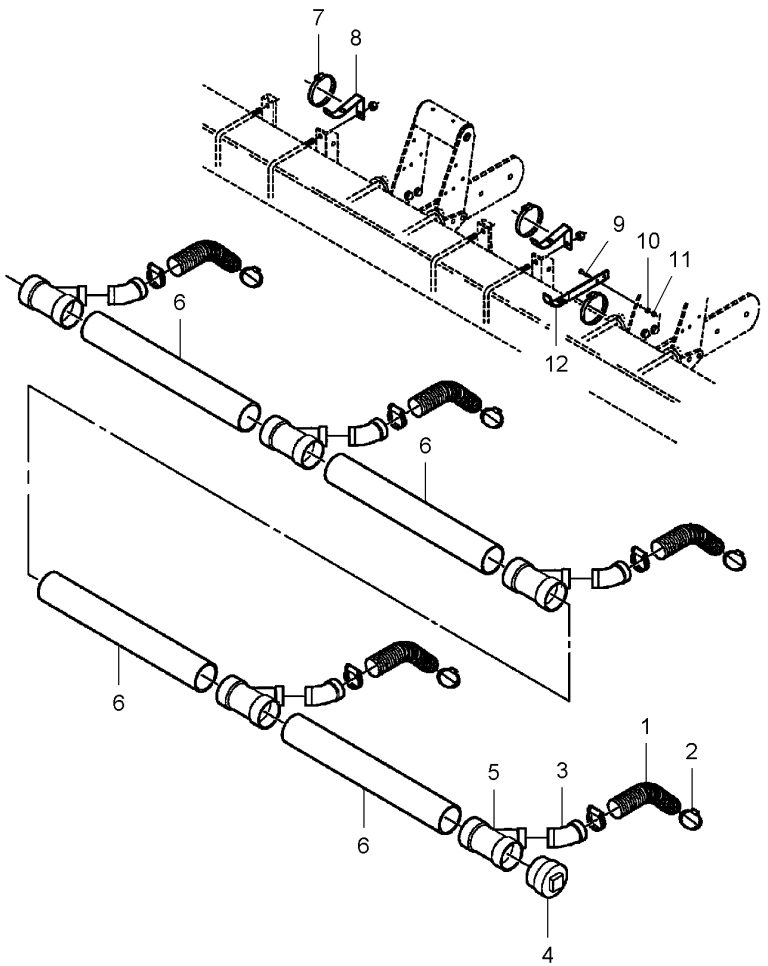


| | | | | | |
|---|---|---|---|---|---|
| 1* | **N857650** | ◀▶ 20" | **5** | HOSE | DURITE<br>TUBO FLESSIBILE | SCHLAUCH<br>TUBO DE GOMA |
| 2* | 720649 | | **10** | HOSE CLIP | COLLIER DURITE<br>COLLARE DI TUBO | SCHLAUCHBINDER<br>ABRAZADERA TUBO |
| 3* | 852866 | | **5** | ELBOW | COUDE<br>GOMITO | WINKELSTUECK<br>CODO |
| 4* | W248133B | | **1** | PLUG | BOUCHON<br>TAPPO | STOPFEN<br>TAPON |
| 5* | **W247838B** | | **5** | PIPE | TUYAU<br>TUBO | TUBE<br>TUBO |
| 6* | W247839B | ◀▶ 24" | **4** | WARM AIR DUCTING | CONDUIT AIR<br>CONDOTTO ARIA | HEIZUNGSVERKLDG<br>CONDUC AIRE CAL |
| 7* | 7720089 | | **3** | HOSE CLIP | COLLIER DURITE<br>COLLARE DI TUBO | SCHLAUCHBINDER<br>ABRAZADERA TUBO |
| 8* | 852215 | | **2** | SUPPORT | SUPPORT<br>SOPPORTO | TRAGER<br>SOPORTE |
| 9* | 70920415 | 3/8"-16 X 1-1/4 | **2** | BOLT UNC | BOULON UNC<br>BULLONE UNC | MASCH.SCHRB.UNC<br>PERNO UNC |
| 10* | 70916965 | 3/8" | **2** | LOCK WASHER | RONDELLE FREIN<br>RONDELLA ARRESTO | SICHERUNGSRING<br>ARANDELA SEGURID |
| 11* | **70916950** | 3/8"-16 | **2** | NUT UNC | ECROU UNC<br>DADO UNC | MUTTER UNC<br>TUERCA UNC |
| 12* | 852214 | | **1** | SUPPORT | SUPPORT<br>SOPPORTO | TRAGER<br>SOPORTE |

**Air Manifolds**
**Collecteurs D'Air**
**Luftsammelkanäle**
**Collettori Di Aria**
**Colectores De Aire**

**50-70**

**12 Row Narrow**
**12 Rangs Etroits**
**12 Schmal Reihes**
**12 Lineas Stretta**
**12 Lineas Estrecho**

5-PL40-012-A

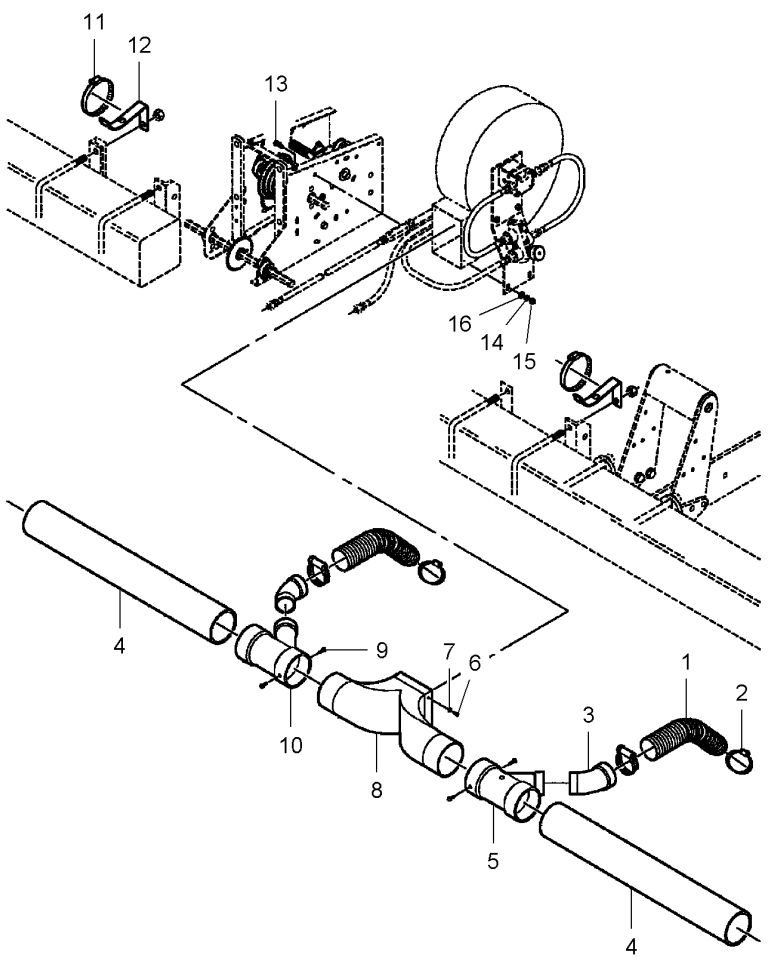


| | | | | | |
|---|---|---|---|---|---|
| 1* | **N857650** | ◀▶ 20" | **2** | HOSE | DURITE<br>TUBO FLESSIBILE<br>TUBO DE GOMA |
| 2* | 720649 | | **4** | HOSE CLIP | COLLIER DURITE<br>COLLARE DI TUBO<br>SCHLAUCHBINDER<br>ABRAZADERA TUBO |
| 3* | 852866 | | **2** | ELBOW | COUDE<br>GOMITO<br>WINKELSTUECK<br>CODO |
| 4* | W247839B | ◀▶ 24" | **2** | WARM AIR DUCTING | CONDUIT AIR<br>CONDOTTO ARIA<br>HEIZUNGSVERKLDG<br>CONDUC AIRE CAL |
| 5* | W247941B | | **1** | PIPE | TUYAU<br>TUBO<br>TUBE<br>TUBO |
| 6* | W239650B | No 10 X 3/4 | **4** | SCREW | VIS<br>VITE<br>SCHRAUBE<br>TORNILLO |
| 7* | 353769X1 | 1/4" | **4** | WASHER | RONDELLE<br>RONDELLA<br>SCHEIBE<br>ARANDELA |
| 8* | W247837B | | **1** | WARM AIR DUCTING | CONDUIT AIR<br>CONDOTTO ARIA<br>HEIZUNGSVERKLDG<br>CONDUC AIRE CAL |
| 9* | N12855 | 1/4"-14 X 5/8 | **4** | SCREW | VIS<br>VITE<br>SCHRAUBE<br>TORNILLO |
| 10* | **W247838B** | | **1** | PIPE | TUYAU<br>TUBO<br>TUBE<br>TUBO |
| 11* | 7720089 | | **2** | HOSE CLIP | COLLIER DURITE<br>COLLARE DI TUBO<br>SCHLAUCHBINDER<br>ABRAZADERA TUBO |
| 12* | 852215 | | **2** | SUPPORT | SUPPORT<br>SOPPORTO<br>TRAGER<br>SOPORTE |
| 13* | 70921210 | 3/8"-16 X 1 | **4** | BOLT UNC | BOULON UNC<br>BULLONE UNC<br>MASCH.SCHRB.UNC<br>PERNO UNC |
| 14* | 70916965 | 3/8" | **4** | LOCK WASHER | RONDELLE FREIN<br>RONDELLA ARRESTO<br>SICHERUNGSRING<br>ARANDELA SEGURID |
| 15* | **70916950** | 3/8"-16 | **4** | NUT UNC | ECROU UNC<br>DADO UNC<br>MUTTER UNC<br>TUERCA UNC |
| 16* | **Y705533** | 3/8" | **2** | WASHER | RONDELLE<br>RONDELLA<br>SCHEIBE<br>ARANDELA |

| Air Manifolds<br>Collecteurs D'Air<br>Luftsammelkanäle<br>Collettori Di Aria<br>Colectores De Aire | 50-75 | 12 Narrow Rows - Right Side<br>12 Rangs Etroits - Cote Droit<br>12 Enge Reihen - Rechte Seite<br>12 Lineas Stretti - Lato Destro<br>12 Lineas Estrechos - Lado Derecho |
|---|---|---|

5-PL40-013-A

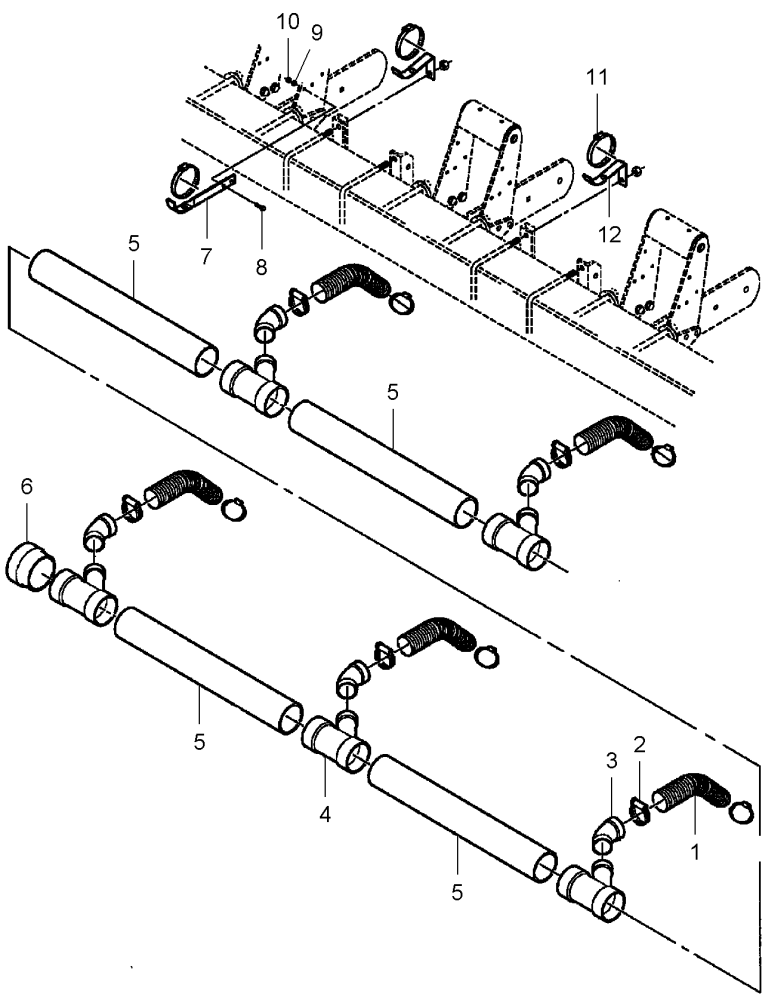


| | | | | | |
|---|---|---|---|---|---|
| 1* | **N857650** | ◀▶ 20" | **5** | HOSE | DURITE<br>TUBO FLESSIBILE<br>TUBO DE GOMA |
| 2* | 720649 | | **10** | HOSE CLIP | COLLIER DURITE<br>COLLARE DI TUBO<br>SCHLAUCHBINDER<br>ABRAZADERA TUBO |
| 3* | 852866 | | **5** | ELBOW | COUDE<br>GOMITO<br>WINKELSTUECK<br>CODO |
| 4* | **W247838B** | | **5** | PIPE | TUYAU<br>TUBO<br>TUBE<br>TUBO |
| 5* | W247839B | ◀▶ 24" | **4** | WARM AIR DUCTING | CONDUIT AIR<br>CONDOTTO ARIA<br>HEIZUNGSVERKLDG<br>CONDUC AIRE CAL |
| 6* | W248133B | | **1** | PLUG | BOUCHON<br>TAPPO<br>STOPFEN<br>TAPON |
| 7* | 852214 | | **1** | SUPPORT | SUPPORT<br>SOPPORTO<br>TRAGER<br>SOPORTE |
| 8* | 70920415 | 3/8"-16 X 1-1/4 | **2** | BOLT UNC | BOULON UNC<br>BULLONE UNC<br>MASCH.SCHRB.UNC<br>PERNO UNC |
| 9* | 70916965 | 3/8" | **2** | LOCK WASHER | RONDELLE FREIN<br>RONDELLA ARRESTO<br>SICHERUNGSRING<br>ARANDELA SEGURID |
| 10* | **70916950** | 3/8"-16 | **2** | NUT UNC | ECROU UNC<br>DADO UNC<br>MUTTER UNC<br>TUERCA UNC |
| 11* | 7720089 | | **3** | HOSE CLIP | COLLIER DURITE<br>COLLARE DI TUBO<br>SCHLAUCHBINDER<br>ABRAZADERA TUBO |
| 12* | 852215 | | **2** | SUPPORT | SUPPORT<br>SOPPORTO<br>TRAGER<br>SOPORTE |

| Air Manifolds<br>Collecteurs D'Air<br>Luftsammelkanäle<br>Collettori Di Aria<br>Colectores De Aire | Vertical Fold Frame<br>Châssis Rabattable<br>Falte Rahmen<br>Telaio Ribaltabile<br>Bastidor Abatible | **50-80** | **8 Narrow Rows - Left Side**<br>**8 Rangs Etroits - Cote Gauche**<br>**8 Enge Reihen - Linke Seite**<br>**8 Lineas Stretti - Lato Sinistro**<br>**8 Lineas Estrechos - Lado Izquierdo** |
|---|---|---|---|

5-PM12-001-A

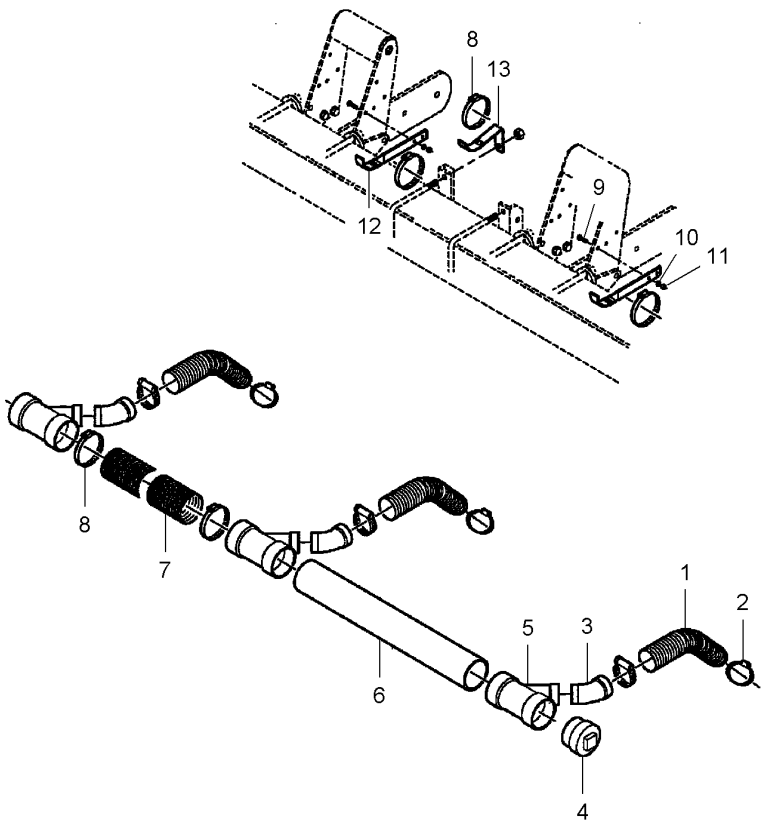


| | | | | | |
|---|---|---|---|---|---|
| 1* | **N857650** | ◀▶ 20" | **3** | HOSE<br>TUBO FLESSIBILE | DURITE<br>TUBO DE GOMA<br>SCHLAUCH |
| 2* | 720649 | | **6** | HOSE CLIP<br>COLLARE DI TUBO | COLLIER DURITE<br>SCHLAUCHBINDER<br>ABRAZADERA TUBO |
| 3* | 852866 | | **3** | ELBOW<br>GOMITO | COUDE<br>WINKELSTUECK<br>CODO |
| 4* | W248133B | | **1** | PLUG<br>TAPPO | BOUCHON<br>STOPFEN<br>TAPON |
| 5* | **W247838B** | | **3** | PIPE<br>TUBO | TUYAU<br>TUBE<br>TUBO |
| 6* | W247839B | ◀▶ 24" | **1** | WARM AIR DUCTING<br>CONDOTTO ARIA | CONDUIT AIR<br>HEIZUNGSVERKLDG<br>CONDUC AIRE CAL |
| 7* | N857660 | | **1** | HOSE<br>TUBO FLESSIBILE | DURITE<br>SCHLAUCH<br>TUBO DE GOMA |
| 8* | 7720089 | | **5** | HOSE CLIP<br>COLLARE DI TUBO | COLLIER DURITE<br>SCHLAUCHBINDER<br>ABRAZADERA TUBO |
| 9* | 70921969 | 3/8"-16 X 1-1/2 | **4** | BOLT UNC<br>BULLONE UNC | BOULON UNC<br>MASCH.SCHRB.UNC<br>PERNO UNC |
| 10* | 70916965 | 3/8" | **4** | LOCK WASHER<br>RONDELLA ARRESTO | RONDELLE FREIN<br>SICHERUNGSRING<br>ARANDELA SEGURID |
| 11* | **70916950** | 3/8"-16 | **4** | NUT UNC<br>DADO UNC | ECROU UNC<br>MUTTER UNC<br>TUERCA UNC |
| 12* | 852214 | | **2** | SUPPORT<br>SOPPORTO | SUPPORT<br>TRAGER<br>SOPORTE |
| 13* | 852215 | | **1** | SUPPORT<br>SOPPORTO | SUPPORT<br>TRAGER<br>SOPORTE |

| Air Manifolds<br>Collecteurs D'Air<br>Luftsammelkanäle<br>Collettori Di Aria<br>Colectores De Aire | Vertical Fold Frame<br>Châssis Rabattable<br>Falte Rahmen<br>Telaio Ribaltabile<br>Bastidor Abatible | **50-85** | 8 Rows Narrow<br>8 Rangs Etroits<br>8 Schmal Reihes<br>8 Lineas Stretta<br>8 Lineas Estrecho |
|---|---|---|---|

5-PM12-002-A

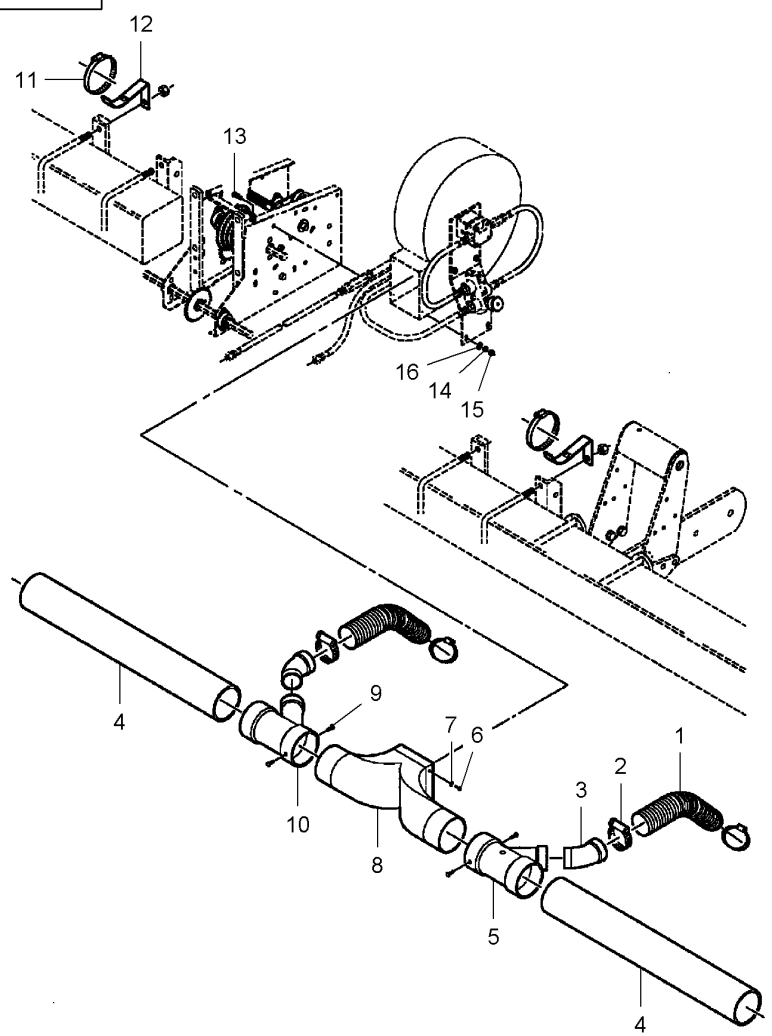


| | | | | | |
|---|---|---|---|---|---|
| 1* | **N857650** | ◀▶ 20" | **2** | HOSE | DURITE<br>TUBO FLESSIBILE<br>TUBO DE GOMA |
| 2* | 720649 | | **4** | HOSE CLIP | COLLIER DURITE<br>COLLARE DI TUBO<br>SCHLAUCHBINDER<br>ABRAZADERA TUBO |
| 3* | 852866 | | **2** | ELBOW | COUDE<br>GOMITO<br>WINKELSTUECK<br>CODO |
| 4* | W247839B | ◀▶ 32" | **2** | WARM AIR DUCTING | CONDUIT AIR<br>CONDOTTO ARIA<br>HEIZUNGSVERKLDG<br>CONDUC AIRE CAL |
| 5* | W247941B | | **1** | PIPE | TUYAU<br>TUBO<br>TUBE<br>TUBO |
| 6* | W239650B | No 10 X 3/4 | **4** | SCREW | VIS<br>VITE<br>SCHRAUBE<br>TORNILLO |
| 7* | 353769X1 | 1/4" | **4** | WASHER | RONDELLE<br>RONDELLA<br>SCHEIBE<br>ARANDELA |
| 8* | W247837B | | **1** | WARM AIR DUCTING | CONDUIT AIR<br>CONDOTTO ARIA<br>HEIZUNGSVERKLDG<br>CONDUC AIRE CAL |
| 9* | N12855 | 1/4"-14 X 5/8 | **4** | SCREW | VIS<br>VITE<br>SCHRAUBE<br>TORNILLO |
| 10* | **W247838B** | | **1** | PIPE | TUYAU<br>TUBO<br>TUBE<br>TUBO |
| 11* | 7720089 | | **2** | HOSE CLIP | COLLIER DURITE<br>COLLARE DI TUBO<br>SCHLAUCHBINDER<br>ABRAZADERA TUBO |
| 12* | 852215 | | **2** | SUPPORT | SUPPORT<br>SOPPORTO<br>TRAGER<br>SOPORTE |
| 13* | 70921210 | 3/8"-16 X 1 | **4** | BOLT UNC | BOULON UNC<br>BULLONE UNC<br>MASCH.SCHRB.UNC<br>PERNO UNC |
| 14* | 70916965 | 3/8" | **4** | LOCK WASHER | RONDELLE FREIN<br>RONDELLA ARRESTO<br>SICHERUNGSRING<br>ARANDELA SEGURID |
| 15* | **70916950** | 3/8"-16 | **4** | NUT UNC | ECROU UNC<br>DADO UNC<br>MUTTER UNC<br>TUERCA UNC |
| 16* | **Y705533** | 3/8" | **2** | WASHER | RONDELLE<br>RONDELLA<br>SCHEIBE<br>ARANDELA |

| Air Manifolds<br>Collecteurs D'Air<br>Luftsammelkanäle<br>Collettori Di Aria<br>Colectores De Aire | Vertical Fold Frame<br>Châssis Rabattable<br>Falte Rahmen<br>Telaio Ribaltabile<br>Bastidor Abatible | **50-90** | **8 Narrow Rows - Right Side**<br>**8 Rangs Etroits - Cote Droit**<br>**8 Enge Reihen - Rechte Seite**<br>**8 Lineas Stretti - Lato Destro**<br>**8 Lineas Estrechos - Lado Derecho** |
|---|---|---|---|

5-PM12-003-A

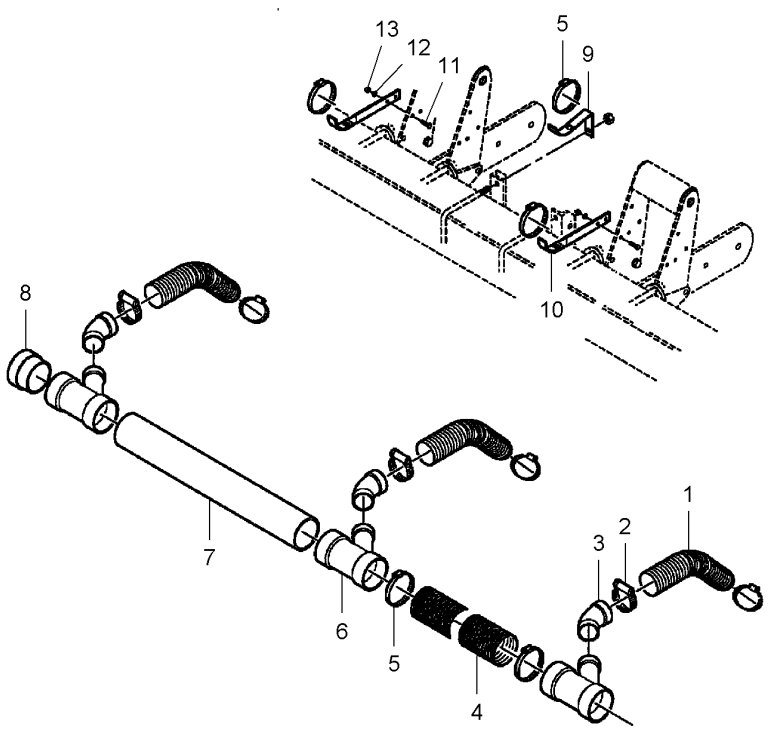


| | | | | | |
|---|---|---|---|---|---|
| 1* | **N857650** | ◀▶ 20" | **3** | HOSE | DURITE<br>TUBO FLESSIBILE | SCHLAUCH<br>TUBO DE GOMA |
| 2* | 720649 | | **6** | HOSE CLIP | COLLIER DURITE<br>COLLARE DI TUBO | SCHLAUCHBINDER<br>ABRAZADERA TUBO |
| 3* | 852866 | | **3** | ELBOW | COUDE<br>GOMITO | WINKELSTUECK<br>CODO |
| 4* | N857660 | | **1** | HOSE | DURITE<br>TUBO FLESSIBILE | SCHLAUCH<br>TUBO DE GOMA |
| 5* | 7720089 | | **5** | HOSE CLIP | COLLIER DURITE<br>COLLARE DI TUBO | SCHLAUCHBINDER<br>ABRAZADERA TUBO |
| 6* | **W247838B** | | **4** | PIPE | TUYAU<br>TUBO | TUBE<br>TUBO |
| 7* | W247839B | ◀▶ 24" | **1** | WARM AIR DUCTING | CONDUIT AIR<br>CONDOTTO ARIA | HEIZUNGSVERKLDG<br>CONDUC AIRE CAL |
| 8* | W248133B | | **1** | PLUG | BOUCHON<br>TAPPO | STOPFEN<br>TAPON |
| 9* | 852215 | | **1** | SUPPORT | SUPPORT<br>SOPPORTO | TRAGER<br>SOPORTE |
| 10* | 852214 | | **2** | SUPPORT | SUPPORT<br>SOPPORTO | TRAGER<br>SOPORTE |
| 11* | 70920415 | 3/8"-16 X 1-1/4 | **4** | BOLT UNC | BOULON UNC<br>BULLONE UNC | MASCH.SCHRB.UNC<br>PERNO UNC |
| 12* | 70916965 | 3/8" | **4** | LOCK WASHER | RONDELLE FREIN<br>RONDELLA ARRESTO | SICHERUNGSRING<br>ARANDELA SEGURID |
| 13* | **70916950** | 3/8"-16 | **4** | NUT UNC | ECROU UNC<br>DADO UNC | MUTTER UNC<br>TUERCA UNC |

| | | | |
|---|---|---|---|
| **Air Manifolds**<br>**Collecteurs D'Air**<br>**Luftsammelkanäle**<br>**Collettori Di Aria**<br>**Colectores De Aire** | **Vertical Fold Frame**<br>**Châssis Rabattable**<br>**Falte Rahmen**<br>**Telaio Ribaltabile**<br>**Bastidor Abatible** | **50-95** | **12 Narrow Rows - Left Side**<br>**12 Rangs Etroits - Cote Gauche**<br>**12 Enge Reihen - Linke Seite**<br>**12 Lineas Stretti - Lato Sinistro**<br>**12 Lineas Estrechos - Lado Izquierdo** |

5-PM12-004-A

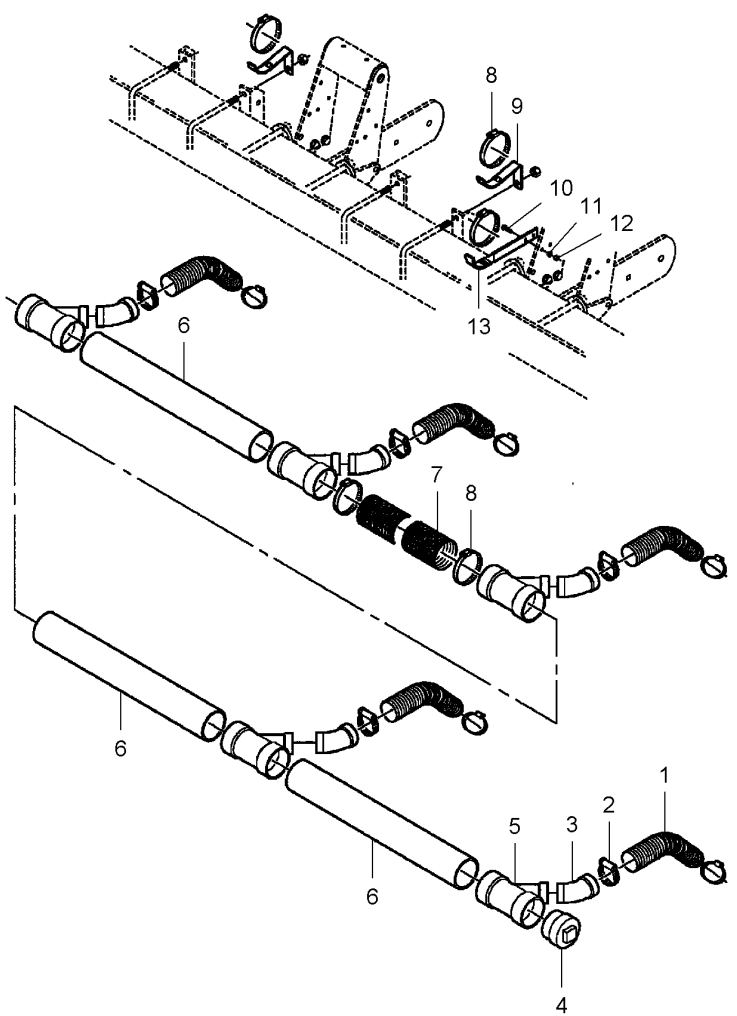


| | | | | | |
|---|---|---|---|---|---|
| 1* | **N857650** | ◀▶ 20" | **5** | HOSE | DURITE<br>TUBO FLESSIBILE | SCHLAUCH<br>TUBO DE GOMA |
| 2* | 720649 | | **10** | HOSE CLIP | COLLIER DURITE<br>COLLARE DI TUBO | SCHLAUCHBINDER<br>ABRAZADERA TUBO |
| 3* | 852866 | | **5** | ELBOW | COUDE<br>GOMITO | WINKELSTUECK<br>CODO |
| 4* | W248133B | | **1** | PLUG | BOUCHON<br>TAPPO | STOPFEN<br>TAPON |
| 5* | **W247838B** | | **5** | PIPE | TUYAU<br>TUBO | TUBE<br>TUBO |
| 6* | W247839B | ◀▶ 24" | **3** | WARM AIR DUCTING | CONDUIT AIR<br>CONDOTTO ARIA | HEIZUNGSVERKLDG<br>CONDUC AIRE CAL |
| 7* | N857660 | | **1** | HOSE | DURITE<br>TUBO FLESSIBILE | SCHLAUCH<br>TUBO DE GOMA |
| 8* | 7720089 | | **5** | HOSE CLIP | COLLIER DURITE<br>COLLARE DI TUBO | SCHLAUCHBINDER<br>ABRAZADERA TUBO |
| 9* | 852215 | | **2** | SUPPORT | SUPPORT<br>SOPPORTO | TRAGER<br>SOPORTE |
| 10* | 70921969 | 3/8"-16 X 1-1/2 | **2** | BOLT UNC | BOULON UNC<br>BULLONE UNC | MASCH.SCHRB.UNC<br>PERNO UNC |
| 11* | 70916965 | 3/8" | **2** | LOCK WASHER | RONDELLE FREIN<br>RONDELLA ARRESTO | SICHERUNGSRING<br>ARANDELA SEGURID |
| 12* | **70916950** | 3/8"-16 | **2** | NUT UNC | ECROU UNC<br>DADO UNC | MUTTER UNC<br>TUERCA UNC |
| 13* | 852214 | | **1** | SUPPORT | SUPPORT<br>SOPPORTO | TRAGER<br>SOPORTE |

| | | | |
|---|---|---|---|
| **Air Manifolds**<br>**Collecteurs D'Air**<br>**Luftsammelkanäle**<br>**Collettori Di Aria**<br>**Colectores De Aire** | **Vertical Fold Frame**<br>**Châssis Rabattable**<br>**Falte Rahmen**<br>**Telaio Ribaltabile**<br>**Bastidor Abatible** | **50-100** | **12 Row Narrow**<br>**12 Rangs Etroits**<br>**12 Schmal Reihes**<br>**12 Lineas Stretta**<br>**12 Lineas Estrecho** |

5-PM12-005-A

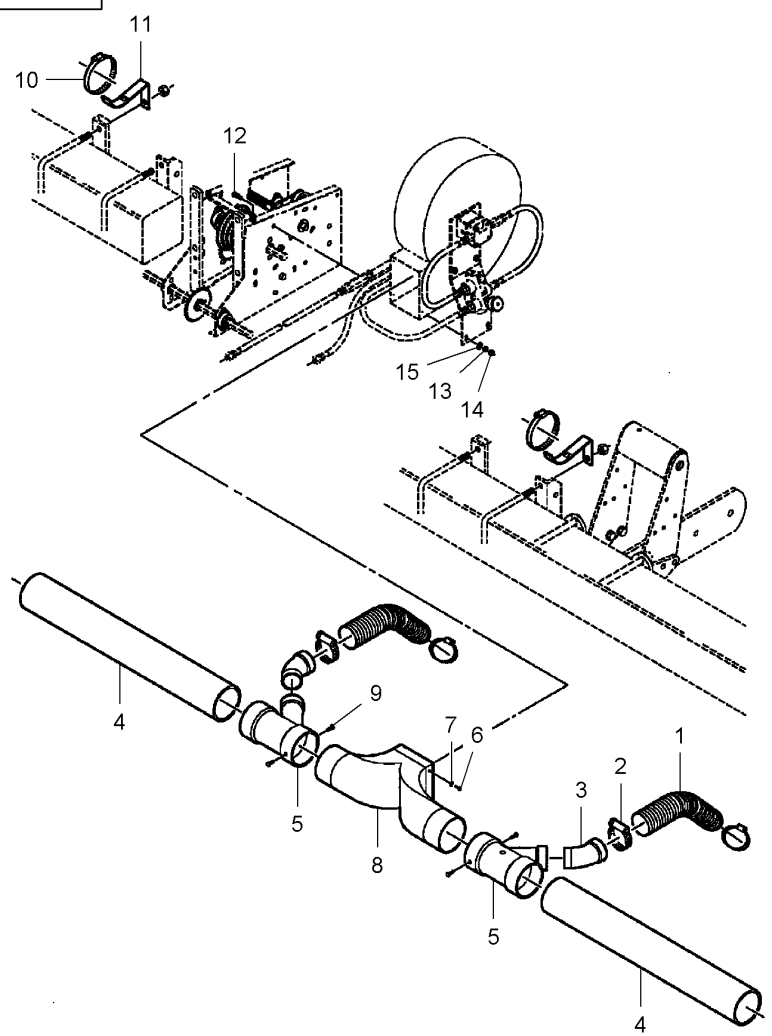


| | | | | | |
|---|---|---|---|---|---|
| 1* | **N857650** | ◀▶ 20" | **2** | HOSE | DURITE<br>TUBO FLESSIBILE | SCHLAUCH<br>TUBO DE GOMA |
| 2* | 720649 | | **4** | HOSE CLIP | COLLIER DURITE<br>COLLARE DI TUBO | SCHLAUCHBINDER<br>ABRAZADERA TUBO |
| 3* | 852866 | | **2** | ELBOW | COUDE<br>GOMITO | WINKELSTUECK<br>CODO |
| 4* | W247839B | ◀▶ 24" | **2** | WARM AIR DUCTING | CONDUIT AIR<br>CONDOTTO ARIA | HEIZUNGSVERKLDG<br>CONDUC AIRE CAL |
| 5* | **W247838B** | | **2** | PIPE | TUYAU<br>TUBO | TUBE<br>TUBO |
| 6* | W239650B | No 10 X 3/4 | **4** | SCREW | VIS<br>VITE | SCHRAUBE<br>TORNILLO |
| 7* | 353769X1 | 1/4" | **4** | WASHER | RONDELLE<br>RONDELLA | SCHEIBE<br>ARANDELA |
| 8* | W247837B | | **1** | WARM AIR DUCTING | CONDUIT AIR<br>CONDOTTO ARIA | HEIZUNGSVERKLDG<br>CONDUC AIRE CAL |
| 9* | N12855 | 1/4"-14 X 5/8 | **4** | SCREW | VIS<br>VITE | SCHRAUBE<br>TORNILLO |
| 10* | 7720089 | | **2** | HOSE CLIP | COLLIER DURITE<br>COLLARE DI TUBO | SCHLAUCHBINDER<br>ABRAZADERA TUBO |
| 11* | 852215 | | **2** | SUPPORT | SUPPORT<br>SOPPORTO | TRAGER<br>SOPORTE |
| 12* | 70921210 | 3/8"-16 X 1 | **4** | BOLT UNC | BOULON UNC<br>BULLONE UNC | MASCH.SCHRB.UNC<br>PERNO UNC |
| 13* | 70916965 | 3/8" | **4** | LOCK WASHER | RONDELLE FREIN<br>RONDELLA ARRESTO | SICHERUNGSRING<br>ARANDELA SEGURID |
| 14* | **70916950** | 3/8"-16 | **4** | NUT UNC | ECROU UNC<br>DADO UNC | MUTTER UNC<br>TUERCA UNC |
| 15* | **Y705533** | 3/8" | **2** | WASHER | RONDELLE<br>RONDELLA | SCHEIBE<br>ARANDELA |

| | | | |
|---|---|---|---|
| **Air Manifolds**<br>**Collecteurs D'Air**<br>**Luftsammelkanäle**<br>**Collettori Di Aria**<br>**Colectores De Aire** | **Vertical Fold Frame**<br>**Châssis Rabattable**<br>**Falte Rahmen**<br>**Telaio Ribaltabile**<br>**Bastidor Abatible** | **50-105** | **12 Narrow Rows - Right Side**<br>**12 Rangs Etroits - Cote Droit**<br>**12 Enge Reihen - Rechte Seite**<br>**12 Lineas Stretti - Lato Destro**<br>**12 Lineas Estrechos - Lado Derecho** |

5-PM12-006-A

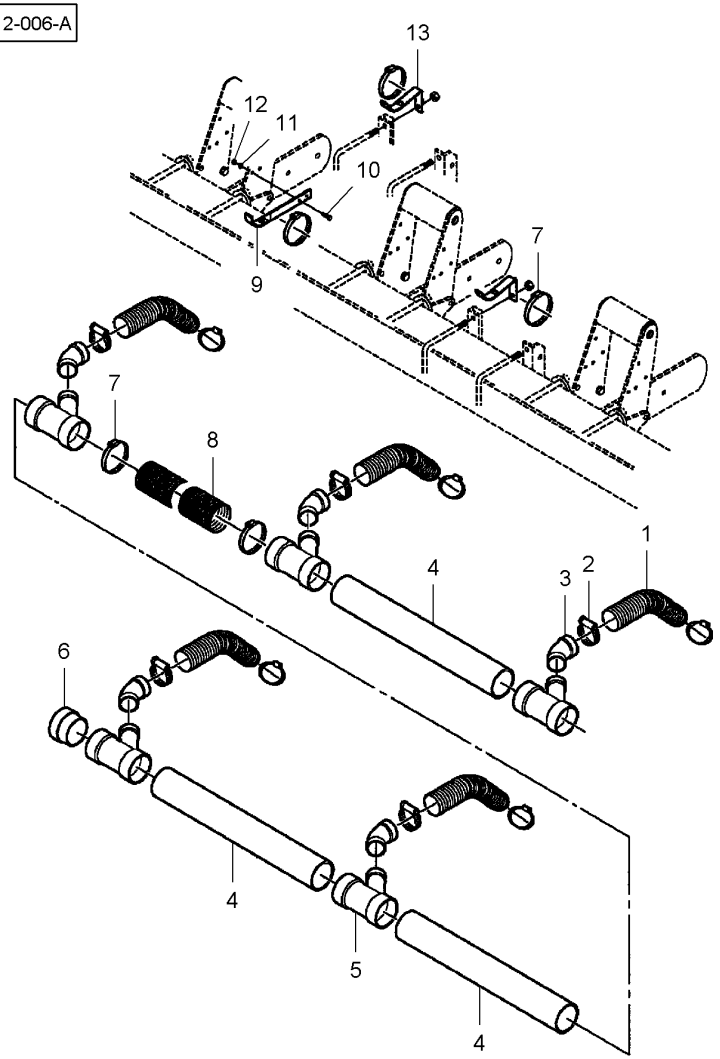


| | | | | | |
|---|---|---|---|---|---|
| 1* | **N857650** | ◀▶ 20" | **5** | HOSE | DURITE<br>TUBO FLESSIBILE | SCHLAUCH<br>TUBO DE GOMA |
| 2* | 720649 | | **10** | HOSE CLIP | COLLIER DURITE<br>COLLARE DI TUBO | SCHLAUCHBINDER<br>ABRAZADERA TUBO |
| 3* | 852866 | | **5** | ELBOW | COUDE<br>GOMITO | WINKELSTUECK<br>CODO |
| 4* | W247834BS | ◀▶ 24" | **3** | WARM AIR DUCTING | CONDUIT AIR<br>CONDOTTO ARIA | HEIZUNGSVERKLDG<br>CONDUC AIRE CAL |
| 5* | **W247838B** | | **5** | PIPE | TUYAU<br>TUBO | TUBE<br>TUBO |
| 6* | W248133B | | **1** | PLUG | BOUCHON<br>TAPPO | STOPFEN<br>TAPON |
| 7* | 7720089 | | **5** | HOSE CLIP | COLLIER DURITE<br>COLLARE DI TUBO | SCHLAUCHBINDER<br>ABRAZADERA TUBO |
| 8* | N857660 | | **1** | HOSE | DURITE<br>TUBO FLESSIBILE | SCHLAUCH<br>TUBO DE GOMA |
| 9* | 852214 | | **1** | SUPPORT | SUPPORT<br>SOPPORTO | TRAGER<br>SOPORTE |
| 10* | 70920415 | 3/8"-16 X 1-1/4 | **2** | BOLT UNC | BOULON UNC<br>BULLONE UNC | MASCH.SCHRB.UNC<br>PERNO UNC |
| 11* | 70916965 | 3/8" | **2** | LOCK WASHER | RONDELLE FREIN<br>RONDELLA ARRESTO | SICHERUNGSRING<br>ARANDELA SEGURID |
| 12* | **70916950** | 3/8"-16 | **2** | NUT UNC | ECROU UNC<br>DADO UNC | MUTTER UNC<br>TUERCA UNC |
| 13* | 852215 | | **2** | SUPPORT | SUPPORT<br>SOPPORTO | TRAGER<br>SOPORTE |

| Air Manifolds<br>Collecteurs D'Air<br>Luftsammelkanäle<br>Collettori Di Aria<br>Colectores De Aire | 50-110 | Gauge<br>Indicateur<br>Anzeiger<br>Indicatore<br>Indicador |
|---|---|---|

5-PL40-008-B

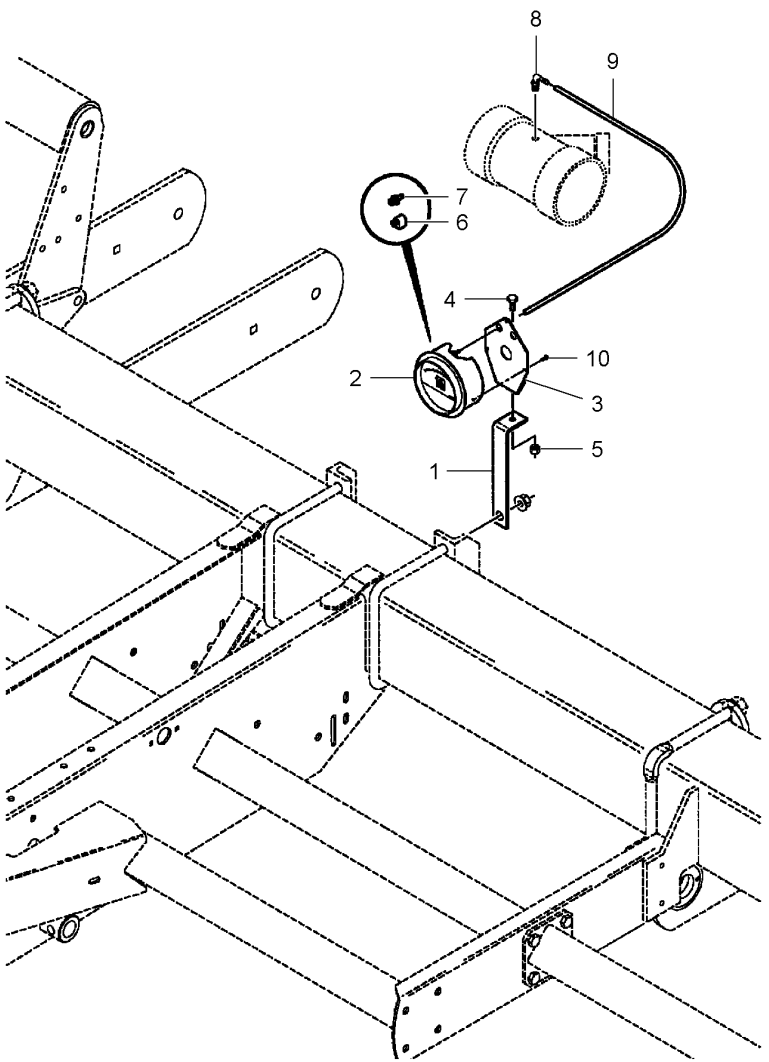


| | | | | | | |
|---|---|---|---|---|---|---|
| 1* | 853335 | | 1 | SUPPORT | SUPPORT<br>SOPPORTO | TRAGER<br>SOPORTE |
| 2 | N856704 | | 1 | GAUGE | APPAREIL INDICAT<br>MISURATORE | MESSGERAET<br>APARAT INDICADOR |
| 3* | N856877 | | 1 | BRACKET | SUPPORT FIXATION<br>STAFFETTA | HALTEARM<br>SOPORTE |
| 4* | 70921965 | 3/8"-16 X 3/4 | 1 | BOLT UNC | BOULON UNC<br>BULLONE UNC | MASCH.SCHRB.UNC<br>PERNO UNC |
| 5 | 7704141 | 3/8"-16 | 1 | LOCKNUT | ECROU FREIN<br>AUTOBLOCCANTE | SICHERUNGSMUTTER<br>CONTRATUERCA |
| 6* | **N858093** | 2 | 1 | FILTER | FILTRE<br>FILTRO | FILTER<br>FILTRO |
| 7* | 70928454 | 2 | 1 | CONNECTOR | BORNE.<br>MORSETTO. | DOPPELNIPPEL<br>CONECTOR |
| 8* | 852229 | | 1 | ELBOW NIPPLE | RACCORD COUDE<br>NIPPLO GOMITO | WINKELSTUTZEN<br>CODO DE UNION |
| 9* | 852230 | ◄► 36" | 1 | HOSE | DURITE<br>TUBO FLESSIBILE | SCHLAUCH<br>TUBO DE GOMA |
| 10* | 700704132 | 2 No 6-32 X 3/4 | 3 | SCREW | VIS<br>VITE | SCHRAUBE<br>TORNILLO |

**Air Manifolds**
**Collecteurs D'Air**
**Luftsammelkanäle**
**Collettori Di Aria**
**Colectores De Aire**

**50-115**

5-PL40-009-B

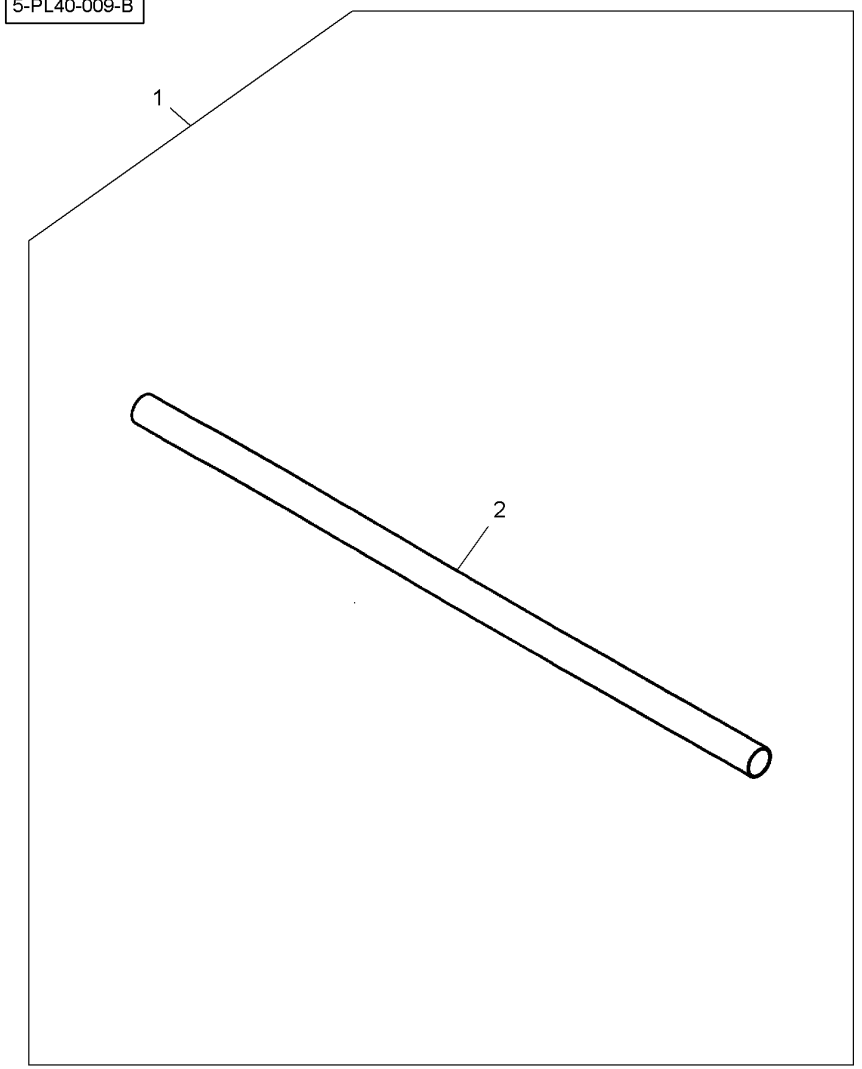


| | | | | | | |
|---|---|---|---|---|---|---|
| 1 | 2087429 | | **1** | KIT, ATTACHMENT | JEU ACCESSOIRES<br>KIT ACCESSORI | SATZ ANBAUTEILE<br>JUEGO ACCESORIO |
| 2 | W248130B | 1 ◀▶ 119" | **1** | WARM AIR DUCTING | CONDUIT AIR<br>CONDOTTO ARIA | HEIZUNGSVERKLDG<br>CONDUC AIRE CAL |

**Air Manifolds**
**Collecteurs D'Air**
**Luftsammelkanäle**
**Collettori Di Aria**
**Colectores De Aire**

**50-120**

5-PL40-010-B

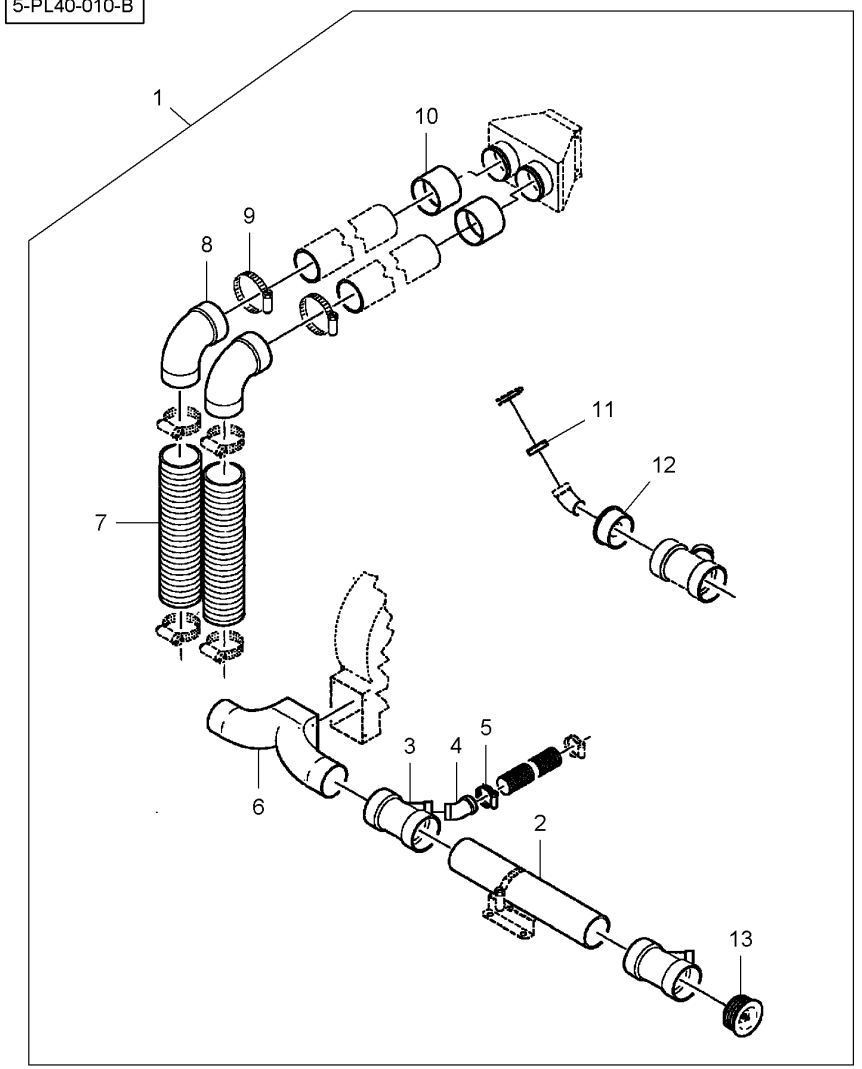


| | | | | | |
|---|---|---|---|---|---|
| 1 | 6100095 | | **1** KIT, ATTACHMENT | JEU ACCESSOIRES<br>KIT ACCESSORI | SATZ ANBAUTEILE<br>JUEGO ACCESORIO |
| 2 | W247839B | 1 ◀▶ 24" | **7** WARM AIR DUCTING | CONDUIT AIR<br>CONDOTTO ARIA | HEIZUNGSVERKLDG<br>CONDUC AIRE CAL |
| 3 | **W247838B** | 1 | **1** PIPE | TUYAU<br>TUBO | TUBE<br>TUBO |
| 4 | 852866 | 1 | **1** ELBOW | COUDE<br>GOMITO | WINKELSTUECK<br>CODO |
| 5 | 720649 | 1 | **4** HOSE CLIP | COLLIER DURITE<br>COLLARE DI TUBO | SCHLAUCHBINDER<br>ABRAZADERA TUBO |
| 6 | W247837B | 1 | **1** WARM AIR DUCTING | CONDUIT AIR<br>CONDOTTO ARIA | HEIZUNGSVERKLDG<br>CONDUC AIRE CAL |
| 7 | N857654 | 1 ◀▶ 24" | **8** HOSE | DURITE<br>TUBO FLESSIBILE | SCHLAUCH<br>TUBO DE GOMA |
| 8 | W248132B | 1 | **2** ELBOW | COUDE<br>GOMITO | WINKELSTUECK<br>CODO |
| 9 | 7720089 | 1 | **28** HOSE CLIP | COLLIER DURITE<br>COLLARE DI TUBO | SCHLAUCHBINDER<br>ABRAZADERA TUBO |
| 10 | W248131B | 1 | **4** COUPLER | COUPLEUR<br>ACCOPPIATORE | KUPPLER<br>ACOPLADOR |
| 11 | 853294 | 1 | **1** CAP | CHAPEAU<br>CAPUCHON | KAPPE<br>TAPA |
| 12 | 853434 | 1 | **1** REDUCER | REDUCTEUR<br>RIDUTTORE | REDUZIERSTUECK<br>REDUCCION |
| 13 | W248380B | 1 | **1** PLUG | BOUCHON<br>TAPPO | STOPFEN<br>TAPON |

60

**Row Unit Frame**
**Bâti Rang Unitaire**
**Einheitsreihe Rahmen**
**Telaio Linea Unitaria**
**Bastidor Línea Unitaria**

**60-5**

5-PL41-001-B

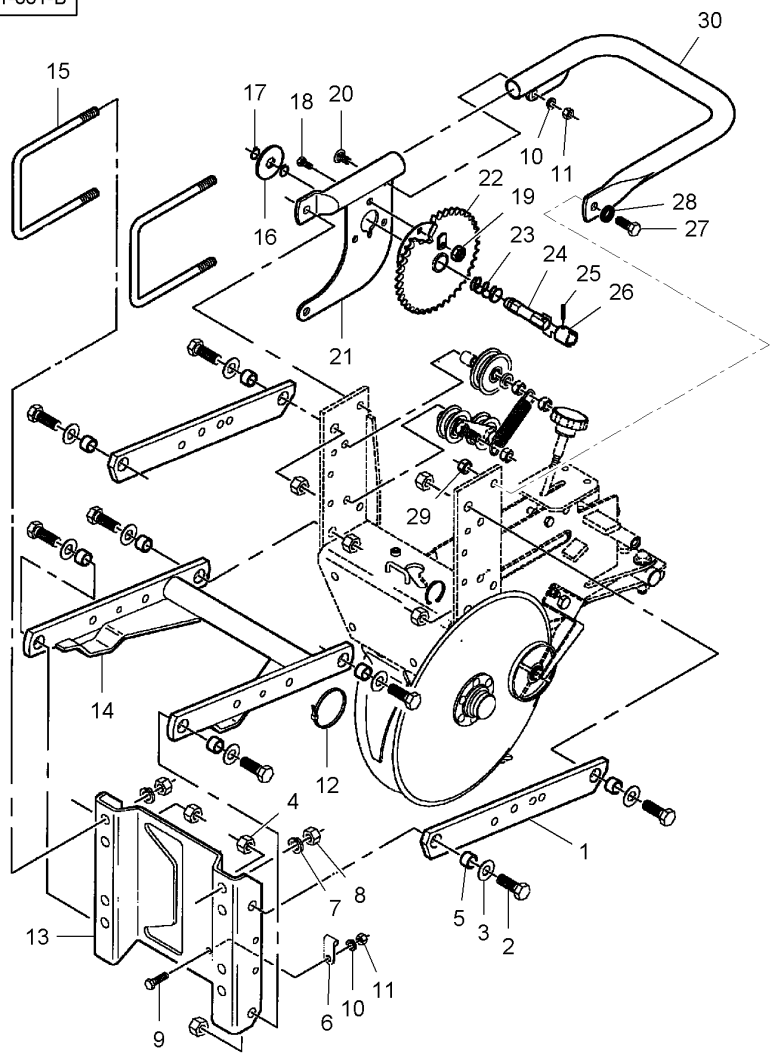


| | | | | | | |
|---|---|---|---|---|---|---|
| 1 | 852169 | | 2 | LINK | MAILLON<br>MAGLIA | GLIED<br>ESLABON |
| 2 | 11118721 | M16 X 45 | 8 | CAPSCREW | VIS BOUCHON<br>TAPPO A VITE | HUTSCHRAUBE<br>TORNILLO TAPON |
| 3 | K4666 | | 8 | WASHER | RONDELLE<br>RONDELLA | SCHEIBE<br>ARANDELA |
| 4 | 70950987 | M16 | 8 | LOCKNUT | ECROU FREIN<br>AUTOBLOCCANTE | SICHERUNGSMUTTER<br>CONTRATUERCA |
| 5 | N854141 | | 8 | BUSH | BAGUE<br>BOCCOLA | RING<br>CASQUILLO |
| 6 | 70928654 | | 1 | CLAMP | COLLIER<br>FASCETTA | HALTESCHELLE<br>ABRAZADERA |
| 7* | 70917373 | 5/8" | 4 | LOCK WASHER | RONDELLE FREIN<br>RONDELLA ARRESTO | SICHERUNGSRING<br>ARANDELA SEGURID |
| 8* | 70932665 | 5/8"-11 | 4 | NUT UNC | ECROU UNC<br>DADO UNC | MUTTER UNC<br>TUERCA UNC |
| 9* | 700708349 | M10 X 25 | 1 | BOLT | BOULON<br>BULLONE | BOLZEN<br>BULON |
| 10* | 700708367 | M10 | 2 | LOCK WASHER | RONDELLE FREIN<br>RONDELLA ARRESTO | SICHERUNGSRING<br>ARANDELA SEGURID |
| 11* | 1440249X1 | M10 | 2 | NUT | ECROU<br>DADO | MUTTER<br>TUERCA |
| 12* | 7724347 | ◀▶ 11" | 2 | CABLE TIE | ATTACHE CABLE<br>FASCETTA CAVI | KABELBINDER<br>APRIETACABLES |
| 13 | 853866 | | 1 | BRACKET | SUPPORT FIXATION<br>STAFFETTA | HALTEARM<br>SOPORTE |
| 14 | 853900 | | 1 | LINK | MAILLON<br>MAGLIA | GLIED<br>ESLABON |
| 15 | **W232588B** | 5/8"-11 X 7-1/16 | 2 | U BOLT | ETRIER FILETE<br>BULLONE A STAFFA | BUEGELSCHRAUBE<br>BRIDA EN U |
| 16 | 855034 | | 1 | RING | ANNEAU<br>ANELLO | RING.<br>ANILLO |
| 17 | W944128-4 | | 2 | RING | ANNEAU<br>ANELLO | RING.<br>ANILLO |
| 18* | 700725326 | M8 X 16 | 3 | SCREW | VIS<br>VITE | SCHRAUBE<br>TORNILLO |
| 19 | N858774 | M8 | 3 | NUT | ECROU<br>DADO | MUTTER<br>TUERCA |
| 20 | 7700545 | M10 X 20 | 1 | SCREW | VIS<br>VITE | SCHRAUBE<br>TORNILLO |
| 21 | N859172 | | 1 | TUBE | TUBE<br>TUBO. | ROHR<br>TUBO. |
| 22 | N852038 | | 1 | SPROCKET | BARBOTIN<br>RUOTA MOTRICE | KETTENRAD<br>RUEDA DE CADENA |
| 23* | 852083 | | 1 | COMP.SPRING | RESSORT DE COMPR<br>MOLLA COMPOSTA | DRUCKFEDER<br>RESORTE DE COMP. |
| 24* | 855035 | | 1 | SHAFT | ARBRE<br>ALBERO | WELLE<br>ARBOL |
| 25* | 70915711 | 3/16" X 7/8 | 1 | ROLL PIN | GOUPILLE ROULEE<br>SPINA ELASTICA | SPANNHUELSE<br>PASADOR ELASTICO |
| 26* | 853845 | | 1 | BUSH | BAGUE<br>BOCCOLA | RING<br>CASQUILLO |

**Row Unit Frame**
**Bâti Rang Unitaire**
**Einheitsreihe Rahmen**
**Telaio Linea Unitaria**
**Bastidor Línea Unitaria**

**60-5**

5-PL41-001-B

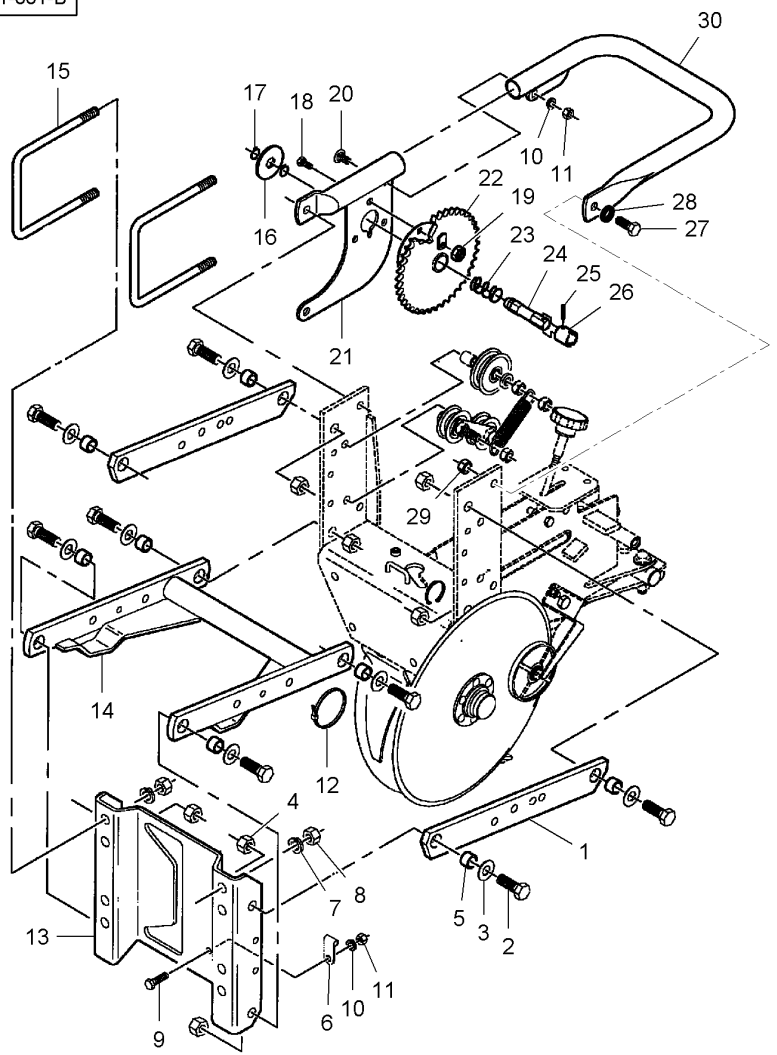


| | | | | | |
|---|---|---|---|---|---|
| 27* | 700708351 | M12 X 30 | **3** CAPSCREW | VIS BOUCHON<br>TAPPO A VITE | HUTSCHRAUBE<br>TORNILLO TAPON |
| 28* | 700708343 | M12 | **3** LOCK WASHER | RONDELLE FREIN<br>RONDELLA ARRESTO | SICHERUNGSRING<br>ARANDELA SEGURID |
| 29* | 3009695X1 | M12 | **3** NUT | ECROU<br>DADO | MUTTER<br>TUERCA |
| 30* | 700156268 | | **1** TUBE | TUBE<br>TUBO. | ROHR<br>TUBO. |

**Row Unit Frame**
**Bâti Rang Unitaire**
**Einheitsreihe Rahmen**
**Telaio Linea Unitaria**
**Bastidor Línea Unitaria**

**60-10**

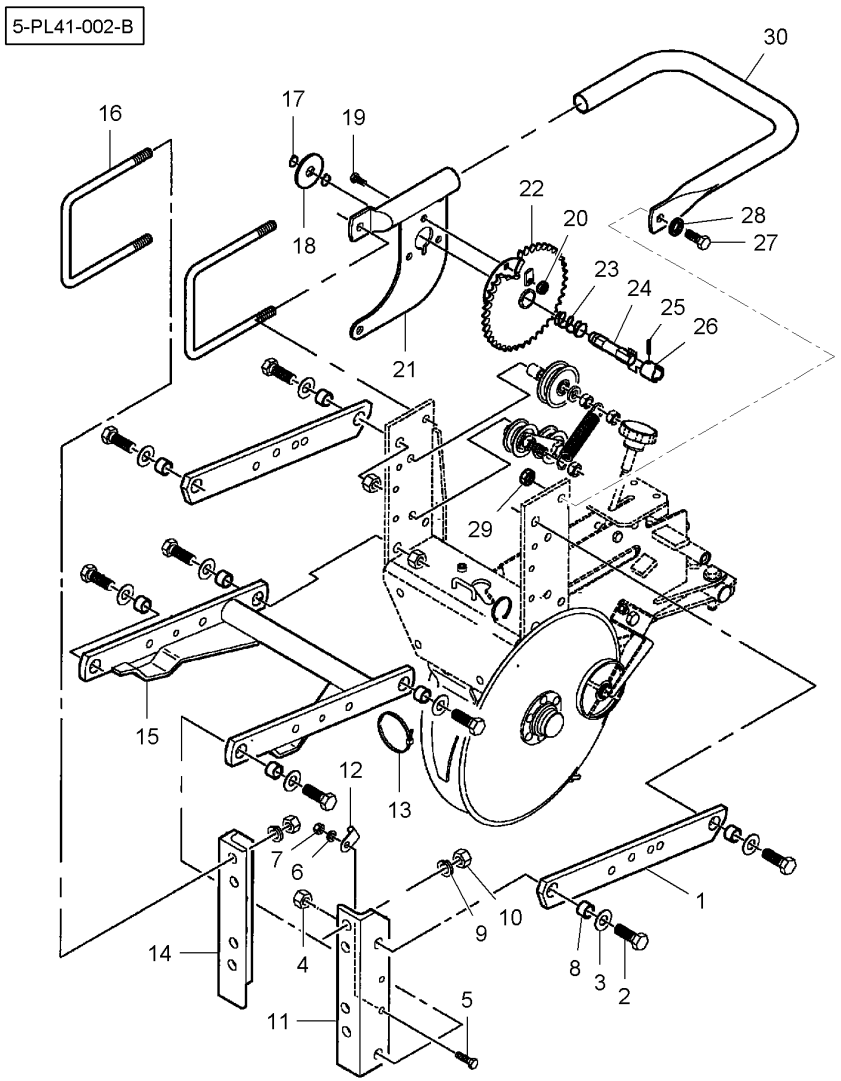


| | | | | | | |
|---|---|---|---|---|---|---|
| 1 | 852169 | | **2** | LINK | MAILLON<br>MAGLIA | GLIED<br>ESLABON |
| 2 | 11118721 | M16 X 45 | **8** | CAPSCREW | VIS BOUCHON<br>TAPPO A VITE | HUTSCHRAUBE<br>TORNILLO TAPON |
| 3 | K4666 | | **8** | WASHER | RONDELLE<br>RONDELLA | SCHEIBE<br>ARANDELA |
| 4 | 70950987 | M16 | **8** | LOCKNUT | ECROU FREIN<br>AUTOBLOCCANTE | SICHERUNGSMUTTER<br>CONTRATUERCA |
| 5 | 700708349 | M10 X 25 | **1** | BOLT | BOULON<br>BULLONE | BOLZEN<br>BULON |
| 6 | 700708367 | M10 | **1** | LOCK WASHER | RONDELLE FREIN<br>RONDELLA ARRESTO | SICHERUNGSRING<br>ARANDELA SEGURID |
| 7* | 1440249X1 | M10 | **1** | NUT | ECROU<br>DADO | MUTTER<br>TUERCA |
| 8 | N854141 | | **4** | BUSH | BAGUE<br>BOCCOLA | RING<br>CASQUILLO |
| 9* | 70917373 | 5/8" | **4** | LOCK WASHER | RONDELLE FREIN<br>RONDELLA ARRESTO | SICHERUNGSRING<br>ARANDELA SEGURID |
| 10 | 70932665 | 5/8"-11 | **4** | NUT UNC | ECROU UNC<br>DADO UNC | MUTTER UNC<br>TUERCA UNC |
| 11 | 854750 | ◀ | **1** | SHANK | ANGLE<br>FUSO | SCHAFT<br>MANGO. |
| 12 | 70928654 | | **1** | CLAMP | COLLIER<br>FASCETTA | HALTESCHELLE<br>ABRAZADERA |
| 13* | 7724347 | | **1** | CABLE TIE | ATTACHE CABLE<br>FASCETTA CAVI | KABELBINDER<br>APRIETACABLES |
| 14 | 854751 | ▶ | **1** | SHANK | ANGLE<br>FUSO | SCHAFT<br>MANGO. |
| 15 | 853900 | | **1** | LINK | MAILLON<br>MAGLIA | GLIED<br>ESLABON |
| 16 | **W232588B** | 5/8"-11 X 7-1/16 | **2** | U BOLT | ETRIER FILETE<br>BULLONE A STAFFA | BUEGELSCHRAUBE<br>BRIDA EN U |
| 17 | W944128-4 | | **2** | RING | ANNEAU<br>ANELLO | RING.<br>ANILLO |
| 18 | 855034 | | **1** | RING | ANNEAU<br>ANELLO | RING.<br>ANILLO |
| 19 | 700725326 | M8 X 16 | **3** | SCREW | VIS<br>VITE | SCHRAUBE<br>TORNILLO |
| 20 | N858774 | M8 | **3** | NUT | ECROU<br>DADO | MUTTER<br>TUERCA |
| 21 | N859172 | | **1** | TUBE | TUBE<br>TUBO. | ROHR<br>TUBO. |
| 22 | N852038 | | **1** | SPROCKET | BARBOTIN<br>RUOTA MOTRICE | KETTENRAD<br>RUEDA DE CADENA |
| 23 | 852083 | | **1** | COMP.SPRING | RESSORT DE COMPR<br>MOLLA COMPOSTA | DRUCKFEDER<br>RESORTE DE COMP. |
| 24 | 855035 | | **1** | SHAFT | ARBRE<br>ALBERO | WELLE<br>ARBOL |
| 25 | 70915711 | 3/16" X 7/8 | **1** | ROLL PIN | GOUPILLE ROULEE<br>SPINA ELASTICA | SPANNHUELSE<br>PASADOR ELASTICO |
| 26 | 853845 | | **1** | BUSH | BAGUE<br>BOCCOLA | RING<br>CASQUILLO |

**Row Unit Frame**
**Bâti Rang Unitaire**
**Einheitsreihe Rahmen**
**Telaio Linea Unitaria**
**Bastidor Línea Unitaria**

**60-10**

5-PL41-002-B

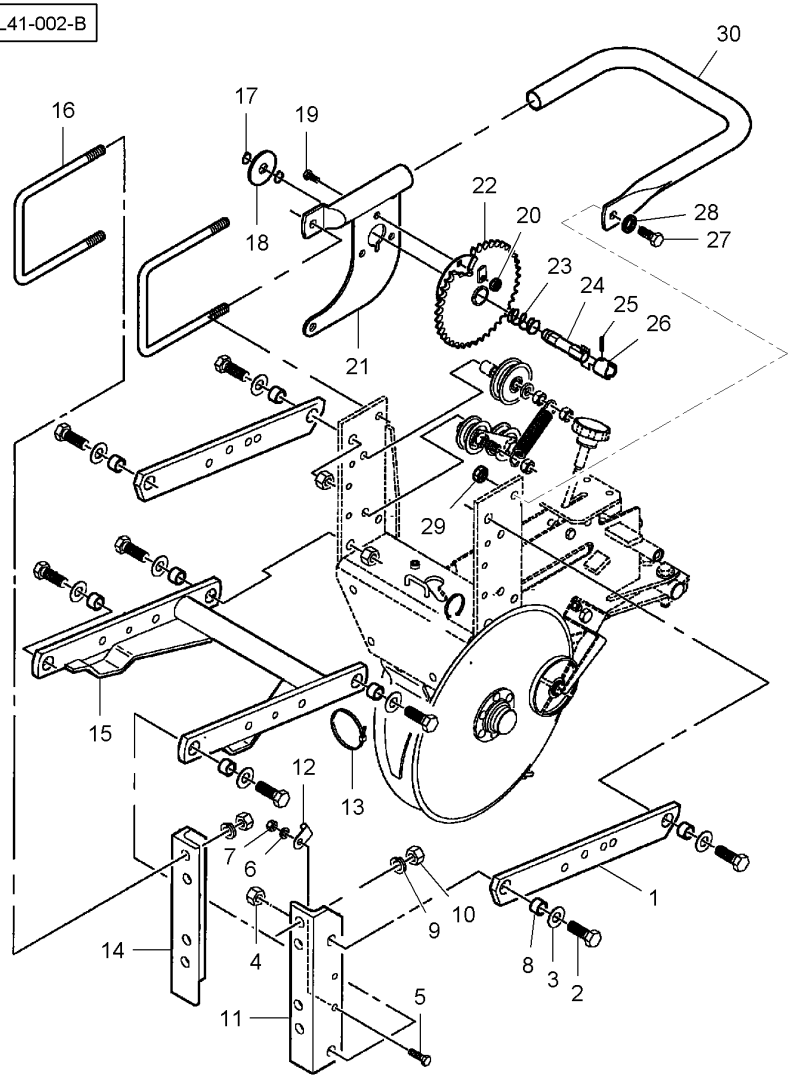


| | | | | | |
|---|---|---|---|---|---|
| 27 | 700708351 | M12 X 30 | **3** CAPSCREW | VIS BOUCHON<br>TAPPO A VITE | HUTSCHRAUBE<br>TORNILLO TAPON |
| 28* | 700708343 | M12 | **3** LOCK WASHER | RONDELLE FREIN<br>RONDELLA ARRESTO | SICHERUNGSRING<br>ARANDELA SEGURID |
| 29 | 3009695X1 | M12 | **3** NUT | ECROU<br>DADO | MUTTER<br>TUERCA |
| 30* | 700156268 | | **1** TUBE | TUBE<br>TUBO. | ROHR<br>TUBO. |

| Row Unit Frame<br>Bâti Rang Unitaire<br>Einheitsreihe Rahmen<br>Telaio Linea Unitaria<br>Bastidor Línea Unitaria | 60-15 | Tightener<br>Tenseur<br>Streckmuskel<br>Tensore<br>Tensor |
|---|---|---|

5-PL41-003-B

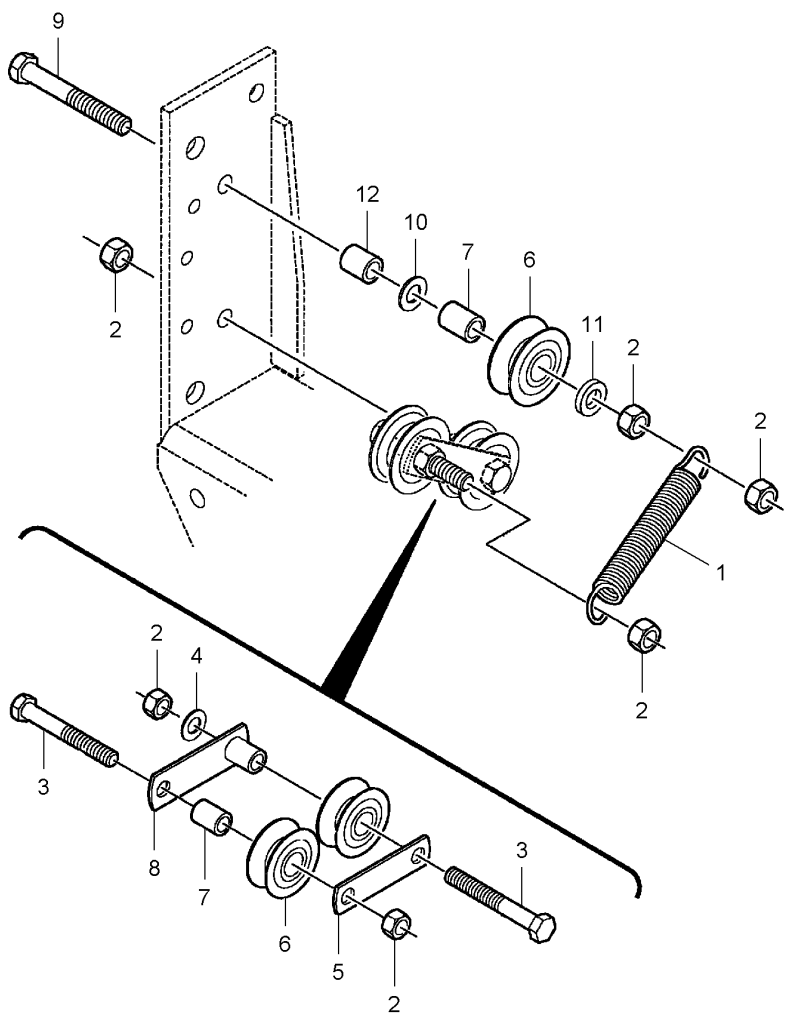


| | | | | | | |
|---|---|---|---|---|---|---|
| 1 | **700717154** | | **1** | SPRING | RESSORT<br>MOLLA | FEDER<br>MUELLE |
| 2 | N858844 | M12 | **6** | LOCKNUT | ECROU FREIN<br>AUTOBLOCCANTE | SICHERUNGSMUTTER<br>CONTRATUERCA |
| 3 | 8701229 | M12 X 80 | **2** | CAPSCREW | VIS BOUCHON<br>TAPPO A VITE | HUTSCHRAUBE<br>TORNILLO TAPON |
| 4 | 10491 | | **1** | WASHER | RONDELLE<br>RONDELLA | SCHEIBE<br>ARANDELA |
| 5 | **W246431B** | | **1** | STRAP | PATTE<br>CORREGGIA | LASCHE<br>FAJA |
| 6 | **853932** | | **3** | ROLLER | GALET<br>ROTELLA | ROLLE<br>RODILLO |
| 7 | WSP1344 | | **2** | SPACER | ENTRETOISE<br>DISTANZIALE | ABSTANDSTUECK<br>DISCO ESPACIADOR |
| 8 | 852073 | | **1** | TIGHTENER | TENSEUR<br>TENDITORE* | SPANNROLLE<br>TENSADOR |
| 9 | 393761X1 | M12 X 95 | **1** | HEX. SOCK. SCREW | VIS TETE HEX<br>VITE PARKER | ZYLINDERSCHRAUBE<br>TORN.CAB.HUECA |
| 10 | 6379820 | | **1** | WASHER | RONDELLE<br>RONDELLA | SCHEIBE<br>ARANDELA |
| 11 | 15838 | | **1** | WASHER | RONDELLE<br>RONDELLA | SCHEIBE<br>ARANDELA |
| 12 | 700149067 | | **1** | SPACER | ENTRETOISE<br>DISTANZIALE | ABSTANDSTUECK<br>DISCO ESPACIADOR |

**Row Unit Frame**
**Bâti Rang Unitaire**
**Einheitsreihe Rahmen**
**Telaio Linea Unitaria**
**Bastidor Línea Unitaria**

**60-20**

5-PL41-004-B

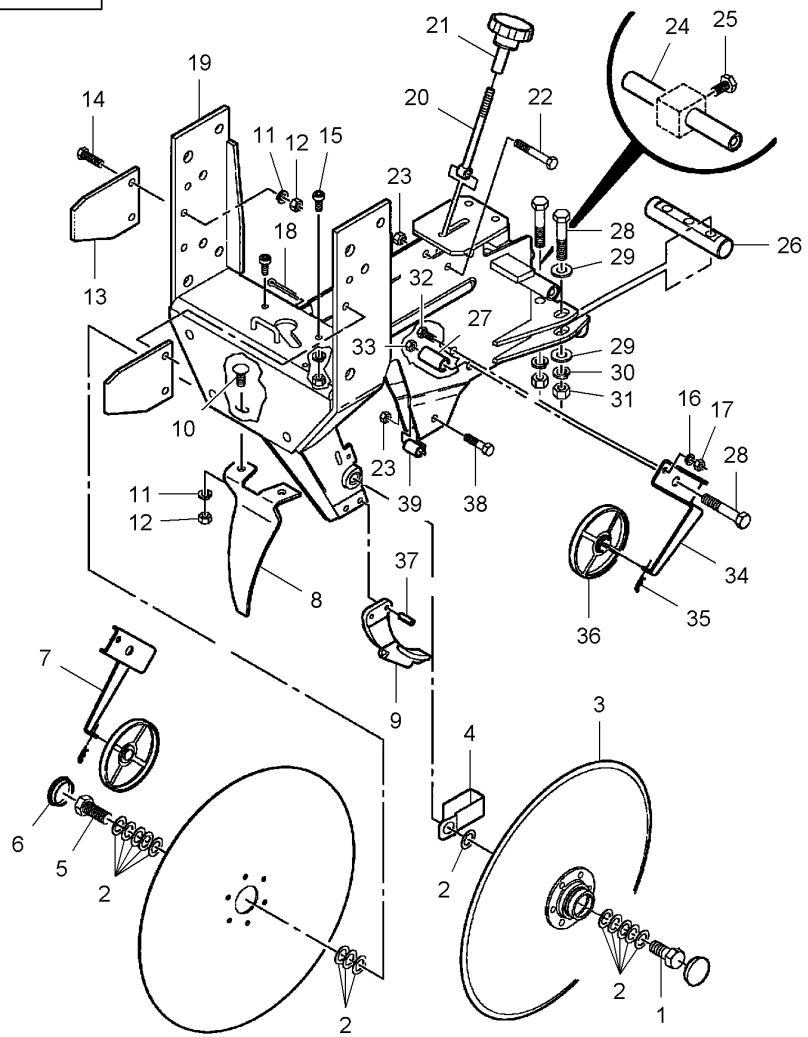


| | | | | | | |
|---|---|---|---|---|---|---|
| 1 | **N858898** | M16 X 40 | **1** | CAPSCREW | VIS BOUCHON<br>TAPPO A VITE | HUTSCHRAUBE<br>TORNILLO TAPON |
| 2 | **852080** | | **14** | SHIM | CALE REGLAGE<br>SPESSORE | AUSGLEICHSCHEIBE<br>CALCE |
| 3* | **700164107** | 60-25 No 1 | **2** | DISC | DISQUE<br>DISCO | SCHEIBE<br>DISCO |
| 4* | **N855728** | | **1** | CENTRALISER | PION<br>CENTRALIZZATORE | FUEHRUNGSKORB<br>CENTRALIZADOR |
| 5* | 7772312 | M16 X 40 | **1** | CAPSCREW | VIS BOUCHON<br>TAPPO A VITE | HUTSCHRAUBE<br>TORNILLO TAPON |
| 6* | **W247165B** | ▶ | **2** | CAP | CHAPEAU<br>CAPUCHON | KAPPE<br>TAPA |
| 7* | 853024 | ▶ | **1** | SUPPORT | SUPPORT<br>SOPPORTO | TRAGER<br>SOPORTE |
| 8* | **852031** | | **1** | SHIELD | TOLE<br>RIPARO | SCHILD<br>BLINDAJE |
| 9* | **852019** | | **1** | GUARD | GARDE<br>PROTEZIONE | SCHUTZVORR<br>DEFENSA |
| 10* | 7700495 | M10 X 25 | **2** | BOLT | BOULON<br>BULLONE | BOLZEN<br>BULON |
| 11* | 700708367 | M10 | **6** | LOCK WASHER | RONDELLE FREIN<br>RONDELLA ARRESTO | SICHERUNGSRING<br>ARANDELA SEGURID |
| 12* | 1440249X1 | M10 | **6** | NUT | ECROU<br>DADO | MUTTER<br>TUERCA |
| 13* | **N857120** | | **2** | BRACKET | SUPPORT FIXATION<br>STAFFETTA | HALTEARM<br>SOPORTE |
| 14* | 700708350 | M10 X 30 | **4** | BOLT | BOULON<br>BULLONE | BOLZEN<br>BULON |
| 15 | 391989X1 | M8 X 20 | **2** | SCREW METRIC | VIS METRIQUE<br>VITE METRICA | SCHRAUBE METR<br>TORNILLO METRICO |
| 16* | 1177981 | M8 | **4** | SPRING WASHER | RONDELLE ELASTIQ<br>RONDELLA ELASTI. | FEDERSCHEIBE<br>ARANDELA ELASTI. |
| 17* | 1702893 | M8 | **4** | NUT | ECROU<br>DADO | MUTTER<br>TUERCA |
| 18 | 62786 | 1/4" X 2-1/2 | **1** | PIN | GOUPILLE<br>COPPIGLIA | STIFT<br>PASADOR |
| 19* | 700160098 | | **1** | FRAME | BATI<br>TELAIO | RAHMEN<br>BASTIDOR |
| 20 | 700158306 | | **1** | ROD | TRINGLE<br>ASTA | STANGE<br>VARILLA |
| 21 | **700158323** | | **1** | KNOB | POMMEAU<br>POMELO | KNOPF<br>POMO |
| 22 | 7772593 | M10 X 60 | **1** | CAPSCREW | VIS BOUCHON<br>TAPPO A VITE | HUTSCHRAUBE<br>TORNILLO TAPON |
| 23 | 700708225 | M10 | **2** | LOCKNUT | ECROU FREIN<br>AUTOBLOCCANTE | SICHERUNGSMUTTER<br>CONTRATUERCA |
| 24 | N858768 | | **1** | SHAFT | ARBRE<br>ALBERO | WELLE<br>ARBOL |
| 25 | 7772478 | M16 X 25 | **1** | CAPSCREW | VIS BOUCHON<br>TAPPO A VITE | HUTSCHRAUBE<br>TORNILLO TAPON |
| 26 | N857546 | | **1** | PIVOT | PIVOT<br>CARDINE | DREHZAPFEN.<br>PIVOTE |

**Row Unit Frame**
**Bâti Rang Unitaire**
**Einheitsreihe Rahmen**
**Telaio Linea Unitaria**
**Bastidor Línea Unitaria**

**60-20**

5-PL41-004-B

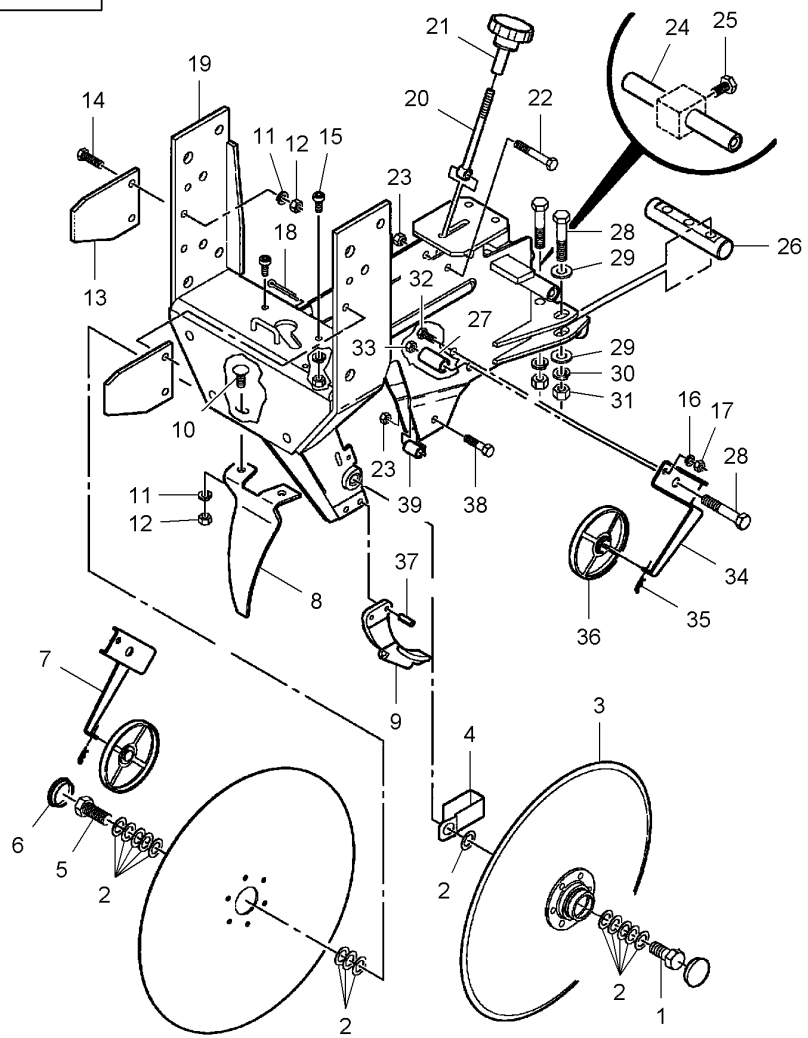


| | | | | | |
|---|---|---|---|---|---|
| 27* | WAF975 | 3/4" X 1-1/2 | **1** BUSH | BAGUE<br>BOCCOLA | RING<br>CASQUILLO |
| 28* | 700712386 | M12 X 65 | **4** CAPSCREW | VIS BOUCHON<br>TAPPO A VITE | HUTSCHRAUBE<br>TORNILLO TAPON |
| 29* | 1705037 | M12 | **4** WASHER | RONDELLE<br>RONDELLA | SCHEIBE<br>ARANDELA |
| 30* | 700708343 | M12 | **3** LOCK WASHER | RONDELLE FREIN<br>RONDELLA ARRESTO | SICHERUNGSRING<br>ARANDELA SEGURID |
| 31* | 3009695X1 | M12 | **3** NUT | ECROU<br>DADO | MUTTER<br>TUERCA |
| 32* | **700708359** | M8 X 20 | **2** BOLT | BOULON<br>BULLONE | BOLZEN<br>BULON |
| 33* | N858844 | M12 | **1** LOCKNUT | ECROU FREIN<br>AUTOBLOCCANTE | SICHERUNGSMUTTER<br>CONTRATUERCA |
| 34* | **853023** | ◀ | **1** SUPPORT | SUPPORT<br>SOPPORTO | TRAGER<br>SOPORTE |
| 35* | W248437B | | **2** CLIP | PATTE D'ATTACHE<br>FERMAGLIO | SCHELLE<br>CLIP |
| 36* | **W248434BS** | | **2** SCRAPER | RACLETTE<br>PALETTA RASCHIA. | KRATZER<br>PALETA |
| 36* | W248437B | 36 | **1** CLIP | PATTE D'ATTACHE<br>FERMAGLIO | SCHELLE<br>CLIP |
| 37* | N17461 | 5/16" X 7/8 | **2** ROLL PIN | GOUPILLE ROULEE<br>SPINA ELASTICA | SPANNHUELSE<br>PASADOR ELASTICO |
| 38* | 7771728 | M10 X 40 | **1** BOLT | BOULON<br>BULLONE | BOLZEN<br>BULON |
| 39* | 852275 | 5/8" X 7/8 | **1** SPACER | ENTRETOISE<br>DISTANZIALE | ABSTANDSTUECK<br>DISCO ESPACIADOR |

| Row Unit Frame<br>Bâti Rang Unitaire<br>Einheitsreihe Rahmen<br>Telaio Linea Unitaria<br>Bastidor Línea Unitaria | 60-25 | Disc<br>Disque<br>Bremsscheibe<br>Disco<br>Disco |
|---|---|---|

5-PL41-005-A

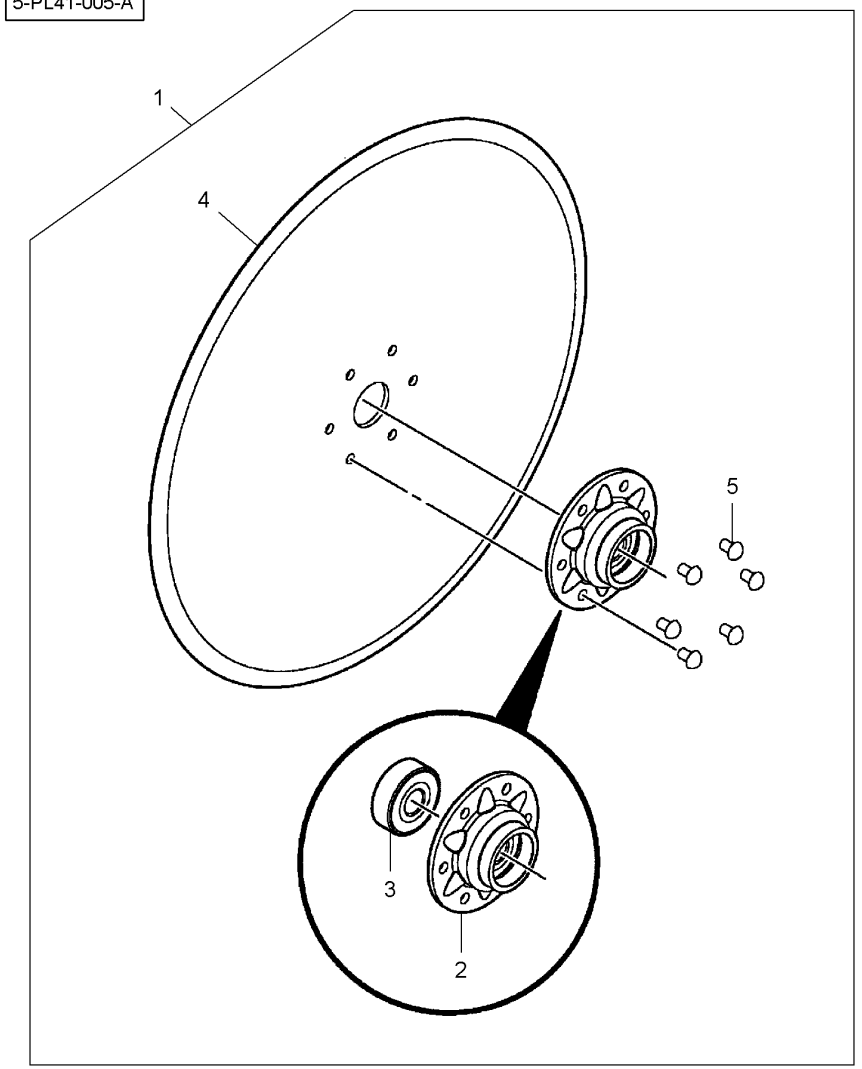


| | | | | | |
|---|---|---|---|---|---|
| 1* | **700164107** | | **1** | DISC | DISQUE<br>DISCO | SCHEIBE<br>DISCO |
| 2* | **700726981** | 1 | **1** | HOUSING | CARTER<br>CARCASSA | GEHAEUSE<br>ALOJAMIENTO |
| 3* | **852270** | 1 | **1** | BEARING ASSY | ROULEMENT<br>CUSCINETTO COMPL | RADIALLAGER<br>RODAMIENTO RAD |
| 4* | 700155035 | 1 | **1** | DISC | DISQUE<br>DISCO | SCHEIBE<br>DISCO |
| 5* | **W923099-4** | 1 | **6** | KIT, RIVET | JEU RIVETS<br>KIT RIVETTI | NIETENSATZ<br>JUEGO DE REMACHE |

**Gauge Wheel**
**Roue De Jauge**
**Druckrolle**
**Rotellina Regolatrice**
**Rueda Reguladora**

**60-30**

5-PL42-001-B

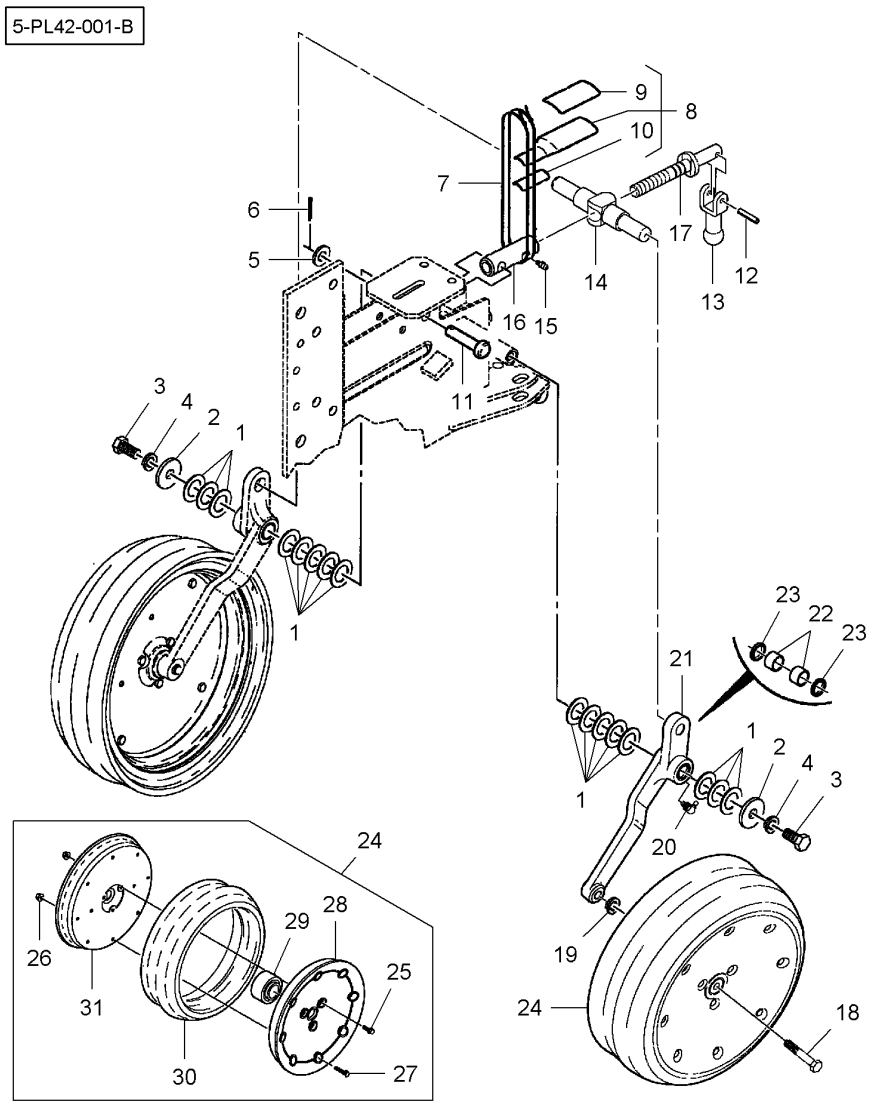


| | | | | | | |
|---|---|---|---|---|---|---|
| 1 | 10568 | | **16** | WASHER | RONDELLE<br>RONDELLA | SCHEIBE<br>ARANDELA |
| 2 | 700717548 | | **2** | WASHER | RONDELLE<br>RONDELLA | SCHEIBE<br>ARANDELA |
| 3 | N858897 | M12 X 25 | **2** | CAPSCREW | VIS BOUCHON<br>TAPPO A VITE | HUTSCHRAUBE<br>TORNILLO TAPON |
| 4* | 700708343 | M12 | **2** | LOCK WASHER | RONDELLE FREIN<br>RONDELLA ARRESTO | SICHERUNGSRING<br>ARANDELA SEGURID |
| 5 | Y705624 | 1/2" | **1** | WASHER | RONDELLE<br>RONDELLA | SCHEIBE<br>ARANDELA |
| 6* | 70918455 | 5/32" X 1 | **1** | PIN | GOUPILLE<br>COPPIGLIA | STIFT<br>PASADOR |
| 7* | 7724347 | | **2** | CABLE TIE | ATTACHE CABLE<br>FASCETTA CAVI | KABELBINDER<br>APRIETACABLES |
| 8* | N858967 | | **1** | PLATE | PLAQUE<br>PIASTRA | PLATTE<br>PLATO |
| 9* | N858621 | 8 | **1** | DECAL | DECALCOMANIE<br>DECALCOMANIA | AUFKLEBER<br>CALCOMANIA |
| 10 | N858966 | 8 | **1** | ADHESIVE | COLLANT<br>ADESIVO | KLEBSTOFF<br>ADHESIVO |
| 11 | 763110 | 1/2" X 2-1/4 | **1** | CLEVIS PIN | AXE<br>PERNO D'ATTACCO | SPLINTBOLZEN<br>BULON CILINDRICO |
| 12 | Y763441 | 1/4" X 1-1/4 | **1** | PIN | GOUPILLE<br>COPPIGLIA | STIFT<br>PASADOR |
| 13 | W247701B | | **1** | GRIP | POIGNEE<br>MANIGLIA | HANDGRIFF<br>MANGO |
| 14 | 853927 | | **1** | ARM | BRAS<br>BRACCIO | SCHARHEBEL<br>BRAZO |
| 15 | 70914687 | 1/4"-28 | **1** | GREASE FITTING | GRAISSEUR<br>INGRASSATORE | DRUCKSCHMIERKOPF<br>ENGRASADOR |
| 16 | N858591 | | **1** | LINK | MAILLON<br>MAGLIA | GLIED<br>ESLABON |
| 17 | W247697B | | **1** | SCREW | VIS<br>VITE | SCHRAUBE<br>TORNILLO |
| 18 | N858899 | ◀ M16 X 75 | **1** | CAPSCREW | VIS BOUCHON<br>TAPPO A VITE | HUTSCHRAUBE<br>TORNILLO TAPON |
| 18 | 700726425 | ▶ M16 X 75 | **1** | SCREW | VIS<br>VITE | SCHRAUBE<br>TORNILLO |
| 19* | 700708348 | M16 | **2** | LOCK WASHER | RONDELLE FREIN<br>RONDELLA ARRESTO | SICHERUNGSRING<br>ARANDELA SEGURID |
| 20 | **70915276** | 1/8"-27 X 90° | **2** | GREASE FITTING | GRAISSEUR<br>INGRASSATORE | DRUCKSCHMIERKOPF<br>ENGRASADOR |
| 21 | 700158651 | ◀ | **1** | ARM | BRAS<br>BRACCIO | SCHARHEBEL<br>BRAZO |
| 21 | 700158652 | ▶ | **1** | ARM | BRAS<br>BRACCIO | SCHARHEBEL<br>BRAZO |
| 22 | **N857114** | 21 | **2** | BUSH | BAGUE<br>BOCCOLA | RING<br>CASQUILLO |
| 23 | **N857113** | 21 | **2** | SEAL | JOINT ETANCHEITE<br>GIUNTO ROTONDO | DICHTRING<br>JUNTA REDONDA |
| 24 | N859182 | | **2** | WHEEL | ROUE<br>RUOTA | RAD<br>RUEDA |

**Gauge Wheel**
**Roue De Jauge**
**Druckrolle**
**Rotellina Regolatrice**
**Rueda Reguladora**

**60-30**

5-PL42-001-B

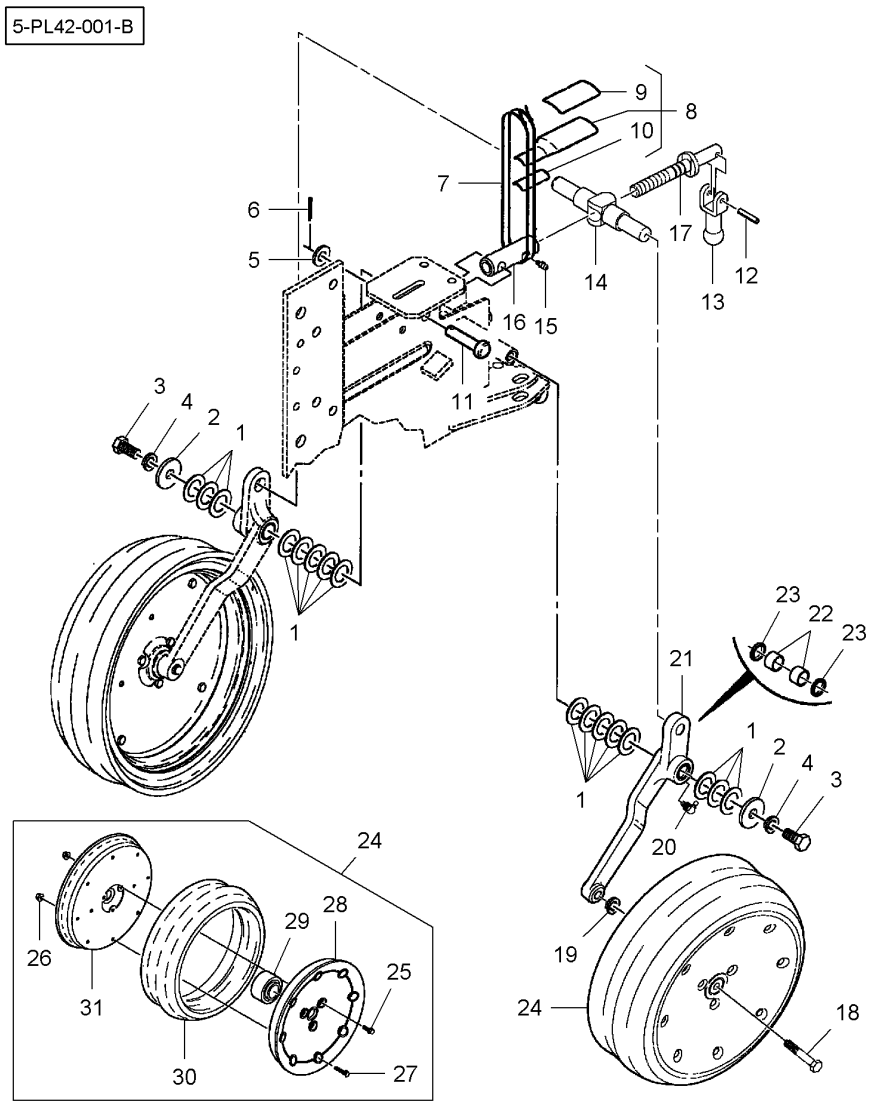


| | | | | | | |
|---|---|---|---|---|---|---|
| 25* | 3009194X1 | 24 | M8 X 25 | **3** | PLOUGH BOLT | VIS A EMBASE<br>VITE TESTA TONDA<br>SENKSCHLOSSSCHRB<br>TORNILLO ALOJ C |
| 26 | N858982 | 24 | M8 | **11** | NUT | ECROU<br>DADO<br>MUTTER<br>TUERCA |
| 27 | 3009198X1 | 24 | M8 X 45 | **8** | PLOUGH BOLT | VIS A EMBASE<br>VITE TESTA TONDA<br>SENKSCHLOSSSCHRB<br>TORNILLO ALOJ C |
| 28 | N859181 | 24 | | **1** | WHEEL | ROUE<br>RUOTA<br>RAD<br>RUEDA |
| 29 | **854003** | 24 | | **1** | BEARING ASSY | ROULEMENT<br>CUSCINETTO COMPL<br>RADIALLAGER<br>RODAMIENTO RAD |
| 30 | 852060 | 24 | | **1** | TYRE | PNEU<br>PNEUMATICO<br>REIFEN<br>NEUMATICO |
| 31 | N858654 | 24 | | **1** | WHEEL | ROUE<br>RUOTA<br>RAD<br>RUEDA |

| | | |
|---|---|---|
| **Gauge Wheel**<br>**Roue De Jauge**<br>**Druckrolle**<br>**Rotellina Regolatrice**<br>**Rueda Reguladora** | **60-35** | **2"-1/2**<br>**2"-1/2**<br>**2"-1/2**<br>**2"-1/2**<br>**2"-1/2** |

5-PL42-002-B

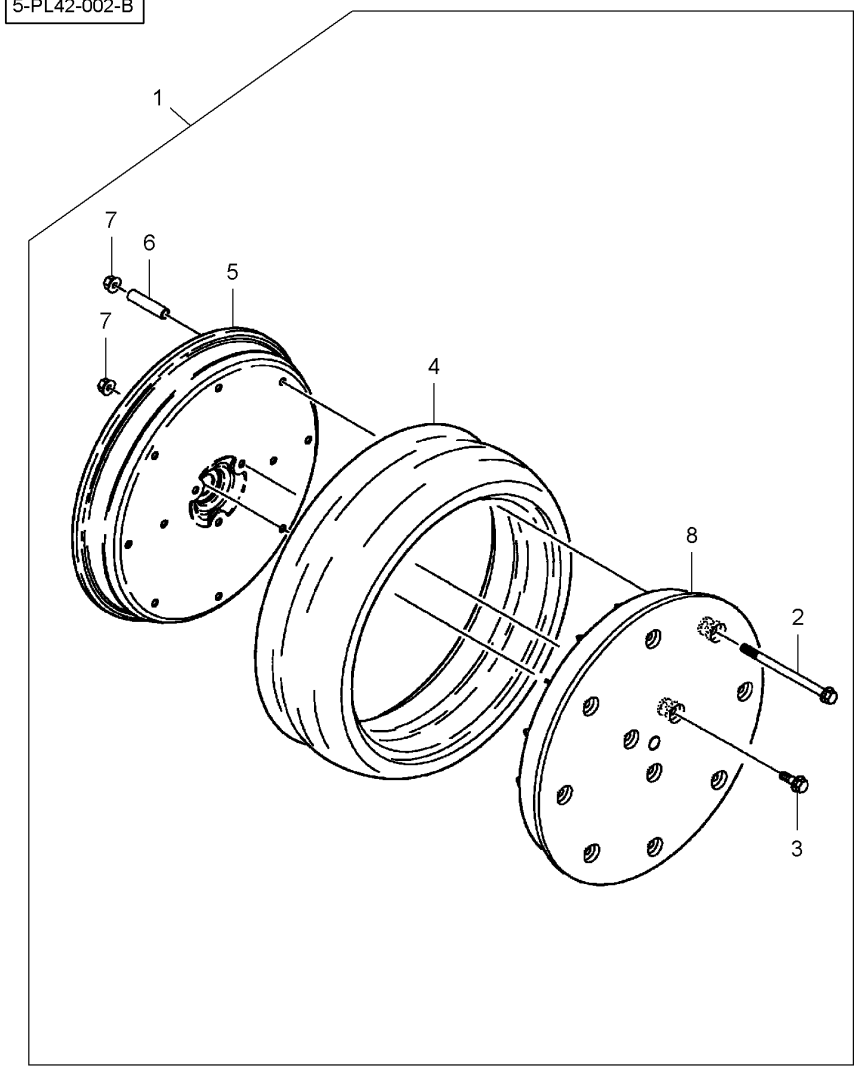


| | | | | | | |
|---|---|---|---|---|---|---|
| 1 | 6000542 | | | **1** KIT, WHEEL | JEU ROUE<br>KIT RUOTA | RADSATZ<br>JUEGO DE RUEDA |
| 2 | 700725748 | 1 | M8 X 130 | **8** SCREW | VIS<br>VITE | SCHRAUBE<br>TORNILLO |
| 3 | 3009194X1 | 1 | M8 X 25 | **14** PLOUGH BOLT | VIS A EMBASE<br>VITE TESTA TONDA | SENKSCHLOSSSCHRB<br>TORNILLO ALOJ C |
| 4 | 700725745 | 1 | | **2** TYRE | PNEU<br>PNEUMATICO | REIFEN<br>NEUMATICO |
| 5 | N858654 | 1 | | **2** WHEEL | ROUE<br>RUOTA | RAD<br>RUEDA |
| 6 | 700725743 | 1 | | **8** SPACER | ENTRETOISE<br>DISTANZIALE | ABSTANDSTUECK<br>DISCO ESPACIADOR |
| 7 | N858982 | 1 | M8 | **22** NUT | ECROU<br>DADO | MUTTER<br>TUERCA |
| 8 | 700725746 | 1 | | **2** WHEEL | ROUE<br>RUOTA | RAD<br>RUEDA |

| | | |
|---|---|---|
| **Gauge Wheel**<br>**Roue De Jauge**<br>**Druckrolle**<br>**Rotellina Regolatrice**<br>**Rueda Reguladora** | **60-40** | **4"-1/2**<br>**4"-1/2**<br>**4"-1/2**<br>**4"-1/2**<br>**4"-1/2** |

5-PL42-003-B

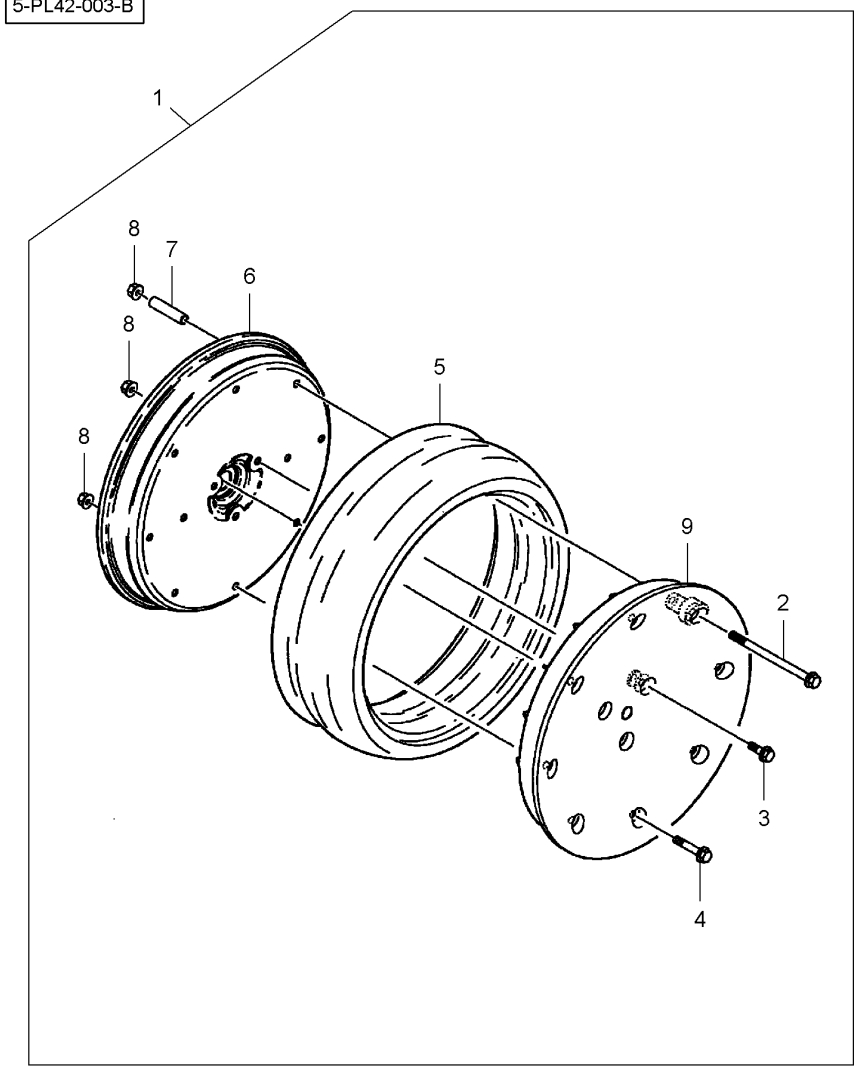


| | | | | | | |
|---|---|---|---|---|---|---|
| 1 | 6000541 | | | **1** | KIT, WHEEL | JEU ROUE<br>KIT RUOTA | RADSATZ<br>JUEGO DE RUEDA |
| 2 | 700725742 | 1 | M8 X 150 | **8** | SCREW | VIS<br>VITE | SCHRAUBE<br>TORNILLO |
| 3 | 3009194X1 | 1 | M8 X 25 | **6** | PLOUGH BOLT | VIS A EMBASE<br>VITE TESTA TONDA | SENKSCHLOSSSCHRB<br>TORNILLO ALOJ C |
| 4 | 3009198X1 | 1 | M8 X 45 | **6** | PLOUGH BOLT | VIS A EMBASE<br>VITE TESTA TONDA | SENKSCHLOSSSCHRB<br>TORNILLO ALOJ C |
| 5 | 852060 | 1 | | **2** | TYRE | PNEU<br>PNEUMATICO | REIFEN<br>NEUMATICO |
| 6 | N858654 | 1 | | **2** | WHEEL | ROUE<br>RUOTA | RAD<br>RUEDA |
| 7 | 700725743 | 1 | | **8** | SPACER | ENTRETOISE<br>DISTANZIALE | ABSTANDSTUECK<br>DISCO ESPACIADOR |
| 8 | N858982 | 1 | M8 | **20** | NUT | ECROU<br>DADO | MUTTER<br>TUERCA |
| 9 | 700725741 | 1 | | **2** | WHEEL | ROUE<br>RUOTA | RAD<br>RUEDA |

**Gauge Wheel**
**Roue De Jauge**
**Druckrolle**
**Rotellina Regolatrice**
**Rueda Reguladora**

**60-45**

5-PL42-004-A

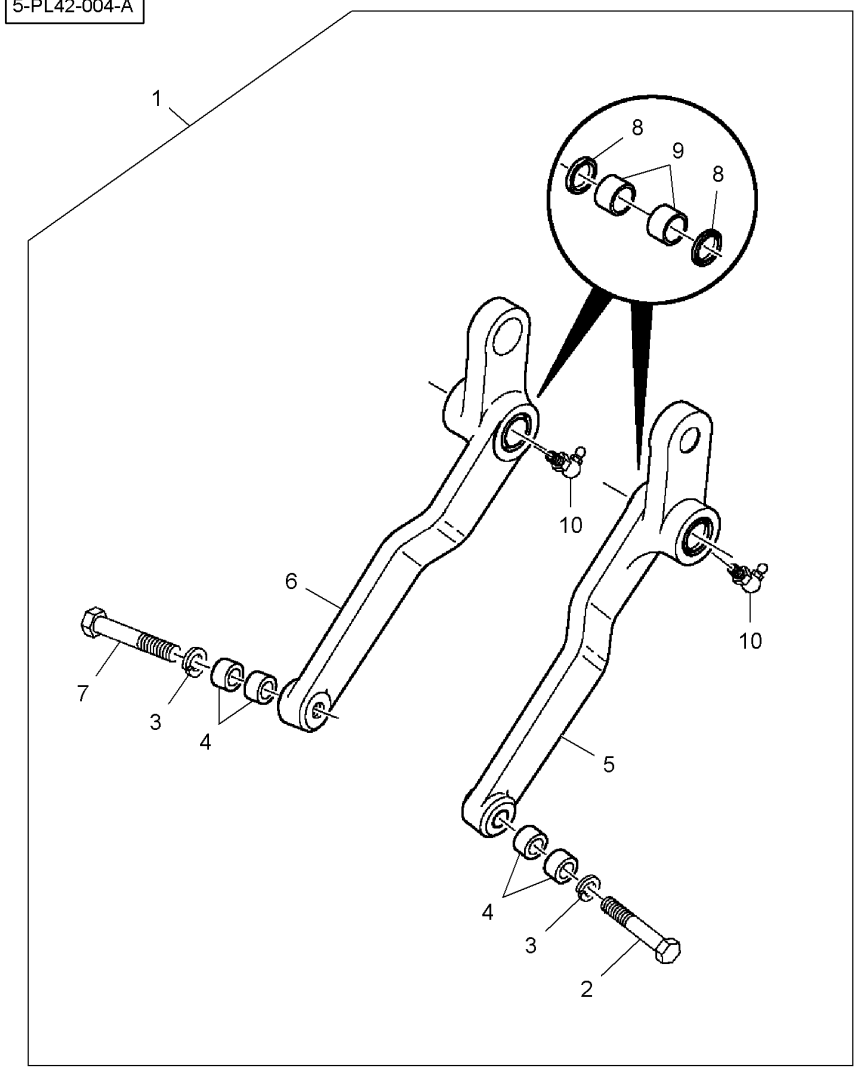


| | | | | | | |
|---|---|---|---|---|---|---|
| 1* | 6100412 | | **1** | KIT, ATTACHMENT | JEU ACCESSOIRES<br>KIT ACCESSORI | SATZ ANBAUTEILE<br>JUEGO ACCESORIO |
| 2* | N858977 | 1 M16 X 105 | **1** | BOLT | BOULON<br>BULLONE | BOLZEN<br>BULON |
| 3* | 700708348 | 1 M16 | **2** | LOCK WASHER | RONDELLE FREIN<br>RONDELLA ARRESTO | SICHERUNGSRING<br>ARANDELA SEGURID |
| 4* | N858883 | 1 | **4** | SPACER | ENTRETOISE<br>DISTANZIALE | ABSTANDSTUECK<br>DISCO ESPACIADOR |
| 5* | N858975 | 1 ◀ | **1** | ARM | BRAS<br>BRACCIO | SCHARHEBEL<br>BRAZO |
| 5* | **N857113** | 5 | **2** | SEAL | JOINT ETANCHEITE<br>GIUNTO ROTONDO | DICHTRING<br>JUNTA REDONDA |
| 5* | **N857114** | 5 | **2** | BUSH | BAGUE<br>BOCCOLA | RING<br>CASQUILLO |
| 5* | 77115 | 5 | **1** | NIPPLE | GRAISSEUR COUDE<br>NIPPLO | NIPPEL<br>NIPLE |
| 6* | N858976 | 1 ▶ | **1** | ARM | BRAS<br>BRACCIO | SCHARHEBEL<br>BRAZO |
| 6* | **N857113** | 6 | **2** | SEAL | JOINT ETANCHEITE<br>GIUNTO ROTONDO | DICHTRING<br>JUNTA REDONDA |
| 6* | **N857114** | 6 | **2** | BUSH | BAGUE<br>BOCCOLA | RING<br>CASQUILLO |
| 6* | 77115 | 6 | **1** | NIPPLE | GRAISSEUR COUDE<br>NIPPLO | NIPPEL<br>NIPLE |
| 7* | N858978 | 1 M16 X 105 | **1** | BOLT | BOULON<br>BULLONE | BOLZEN<br>BULON |
| 8* | **N857113** | 1 | **4** | SEAL | JOINT ETANCHEITE<br>GIUNTO ROTONDO | DICHTRING<br>JUNTA REDONDA |
| 9* | **N857114** | 1 | **4** | BUSH | BAGUE<br>BOCCOLA | RING<br>CASQUILLO |
| 10* | 77115 | 1 1/8"-27 X 90° | **2** | NIPPLE | GRAISSEUR COUDE<br>NIPPLO | NIPPEL<br>NIPLE |

**Covering Wheels**
**Roues De Recouvrement**
**Druckrollen**
**Ruote Per Ricoprimento**
**Ruedas Tapadoras**

**60-50**

**HP ...**

5-PM18-001-A

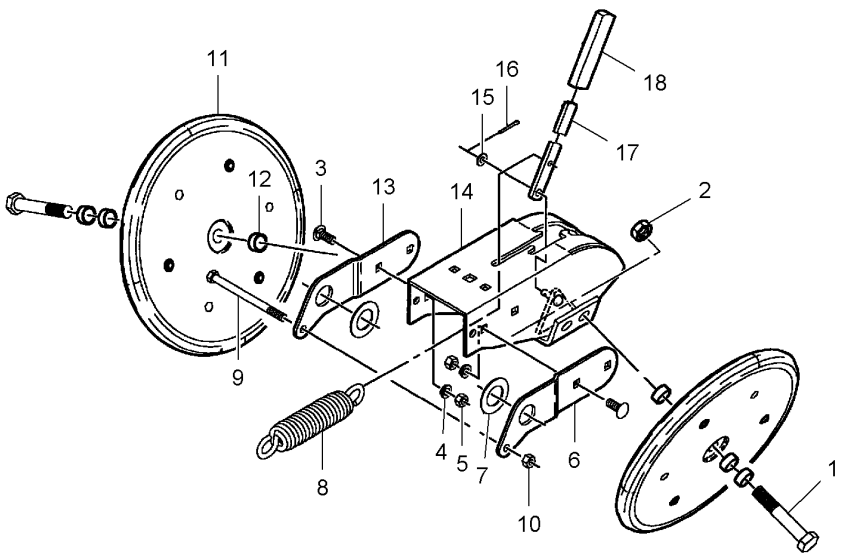


| | | | | | |
|---|---|---|---|---|---|
| 1* | N858979 | M16 X 95 | 2 | BOLT | BOULON<br>BULLONE<br>BOLZEN<br>BULON |
| 2* | 700725080 | M16 | 2 | LOCKNUT | ECROU FREIN<br>AUTOBLOCCANTE<br>SICHERUNGSMUTTER<br>CONTRATUERCA |
| 3* | 7700495 | M10 X 25 | 4 | BOLT | BOULON<br>BULLONE<br>BOLZEN<br>BULON |
| 4* | 700708367 | M10 | 4 | LOCK WASHER | RONDELLE FREIN<br>RONDELLA ARRESTO<br>SICHERUNGSRING<br>ARANDELA SEGURID |
| 5* | 1440249X1 | M10 | 4 | NUT | ECROU<br>DADO<br>MUTTER<br>TUERCA |
| 6* | N858761 | ◀ | 1 | ARM | BRAS<br>BRACCIO<br>SCHARHEBEL<br>BRAZO |
| 7* | 700717669 | | 2 | WASHER | RONDELLE<br>RONDELLA<br>SCHEIBE<br>ARANDELA |
| 8* | **N856594** | | 1 | SPRING | RESSORT<br>MOLLA<br>FEDER<br>MUELLE |
| 9* | 339649X1 | M10 X 140 | 1 | HEX. SOCK. SCREW | VIS TETE HEX<br>VITE PARKER<br>ZYLINDERSCHRAUBE<br>TORN.CAB.HUECA |
| 10* | PZND2084V | M10 | 1 | LOCKNUT | ECROU FREIN<br>AUTOBLOCCANTE<br>SICHERUNGSMUTTER<br>CONTRATUERCA |
| 11* | **854262** | [A]<br>60-75 No 1 | 2 | WHEEL | ROUE<br>RUOTA<br>RAD<br>RUEDA |
| 11* | 854077 | [B]<br>60-80 No 1 | 2 | WHEEL | ROUE<br>RUOTA<br>RAD<br>RUEDA |
| 12* | **WZ5856** | | 6 | BUSH | BAGUE<br>BOCCOLA<br>RING<br>CASQUILLO |
| 13* | N858762 | ▶ | 1 | ARM | BRAS<br>BRACCIO<br>SCHARHEBEL<br>BRAZO |
| 14* | 855161 | | 1 | FRAME | BATI<br>TELAIO<br>RAHMEN<br>BASTIDOR |
| 15* | 700717619 | | 1 | WASHER | RONDELLE<br>RONDELLA<br>SCHEIBE<br>ARANDELA |
| 16* | 70918452 | 1/8" X 1 | 1 | SPLIT PIN | GOUPILLE FENDUE<br>COPIGLIA<br>SPALTBOLZEN<br>PASADOR HENDIDO |
| 17* | 852017 | | 1 | LEVER | LEVIER<br>LEVA<br>HEBEL<br>PALANCA |
| 18* | 852085 | | 1 | HANDLE | MANCHE<br>IMPUGNATURA<br>GRIFF<br>EMPUNADURA |

[A] RUBBER
CAOUTCHOUC
GUMMI
GOMMA
CAUCHO

[B] CAST IRON
FONTE
GUSSEISEN
GHISA
FUNDICION

**Covering Wheels**
**Roues De Recouvrement**
**Druckrollen**
**Ruote Per Ricoprimento**
**Ruedas Tapadoras**

**60-55**

**HP ...**

5-PM18-006-A

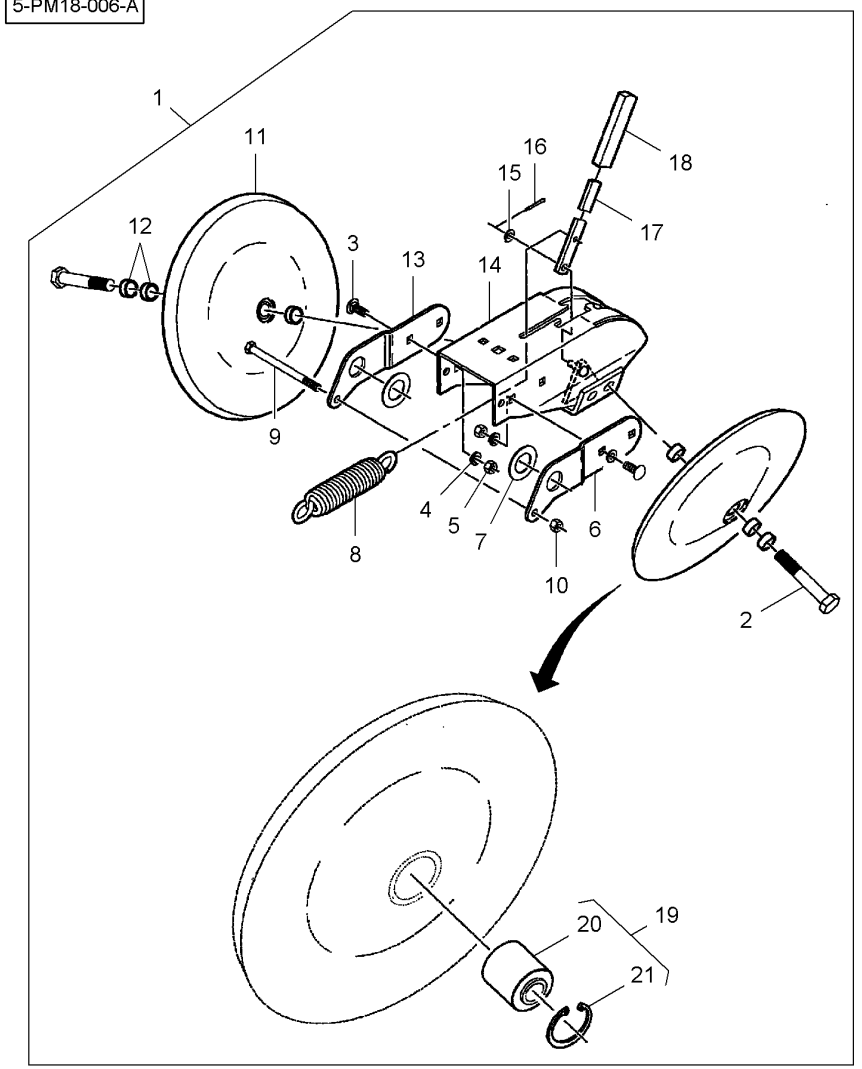


| | | | | | | |
|---|---|---|---|---|---|---|
| 1 | 6000564 | | | **1** | KIT, ATTACHMENT | JEU ACCESSOIRES<br>KIT ACCESSORI |
| 2 | N858979 | 1 | M16 X 95 | **2** | BOLT | BOULON<br>BULLONE |
| 2* | 700725080 | 1 | M16 | **2** | LOCKNUT | ECROU FREIN<br>AUTOBLOCCANTE |
| 3 | 390809X1 | 1 | M10 X 25 | **4** | SCREW SPECIAL | VIS SPECIALE<br>VITE SPECIALE |
| 4 | 700708367 | 1 | | **4** | LOCK WASHER | RONDELLE FREIN<br>RONDELLA ARRESTO |
| 5 | 339402X1 | 1 | M10 | **4** | NUT SPECIAL | ECROU SPECIAL<br>DADO SPECIALE |
| 6 | N858761 | 1 | | **1** | ARM | BRAS<br>BRACCIO |
| 7 | 700717669 | 1 | | **2** | WASHER | RONDELLE<br>RONDELLA |
| 8 | **N856594** | 1 | | **1** | SPRING | RESSORT<br>MOLLA |
| 9 | 339649X1 | 1 | M10 X 140 | **1** | HEX. SOCK. SCREW | VIS TETE HEX<br>VITE PARKER |
| 10 | PZND2084V | 1 | M10 | **1** | LOCKNUT | ECROU FREIN<br>AUTOBLOCCANTE |
| 11 | 854077 | 1 | | **2** | WHEEL | ROUE<br>RUOTA |
| 12 | **WZ5856** | 1 | | **6** | BUSH | BAGUE<br>BOCCOLA |
| 13 | N858762 | 1 | | **1** | ARM | BRAS<br>BRACCIO |
| 14 | 855161 | 1 | | **1** | FRAME | BATI<br>TELAIO |
| 15 | 700717619 | 1 | | **1** | WASHER | RONDELLE<br>RONDELLA |
| 16 | 70918452 | 1 | 1/8" X 1 | **1** | SPLIT PIN | GOUPILLE FENDUE<br>COPIGLIA |
| 17 | 852017 | 1 | | **1** | LEVER | LEVIER<br>LEVA |
| 18 | 852085 | 1 | | **1** | HANDLE | MANCHE<br>IMPUGNATURA |
| 19 | 6100101 | 1 | | **1** | KIT, ATTACHMENT | JEU ACCESSOIRES<br>KIT ACCESSORI |
| 20 | **854003** | 19 | | **1** | BEARING ASSY | ROULEMENT<br>CUSCINETTO COMPL |
| 21 | 7033699 | 19 | | **1** | RING | ANNEAU<br>ANELLO |

| | | | | | |
|---|---|---|---|---|---|
| | | | | | SATZ ANBAUTEILE<br>JUEGO ACCESORIO |
| | | | | | BOLZEN<br>BULON |
| | | | | | SICHERUNGSMUTTER<br>CONTRATUERCA |
| | | | | | SPEZIALSCHRAUBE<br>TORNILLO ESPEC. |
| | | | | | SICHERUNGSRING<br>ARANDELA SEGURID |
| | | | | | SPEZIALMUTTER<br>TUERCA ESPECIAL |
| | | | | | SCHARHEBEL<br>BRAZO |
| | | | | | SCHEIBE<br>ARANDELA |
| | | | | | FEDER<br>MUELLE |
| | | | | | ZYLINDERSCHRAUBE<br>TORN.CAB.HUECA |
| | | | | | SICHERUNGSMUTTER<br>CONTRATUERCA |
| | | | | | RAD<br>RUEDA |
| | | | | | RING<br>CASQUILLO |
| | | | | | SCHARHEBEL<br>BRAZO |
| | | | | | RAHMEN<br>BASTIDOR |
| | | | | | SCHEIBE<br>ARANDELA |
| | | | | | SPALTBOLZEN<br>PASADOR HENDIDO |
| | | | | | HEBEL<br>PALANCA |
| | | | | | GRIFF<br>EMPUNADURA |
| | | | | | SATZ ANBAUTEILE<br>JUEGO ACCESORIO |
| | | | | | RADIALLAGER<br>RODAMIENTO RAD |
| | | | | | RING.<br>ANILLO |

**Covering Wheels**
**Roues De Recouvrement**
**Druckrollen**
**Ruote Per Ricoprimento**
**Ruedas Tapadoras**

**60-60**

**HP ...**

5-PM18-007-A

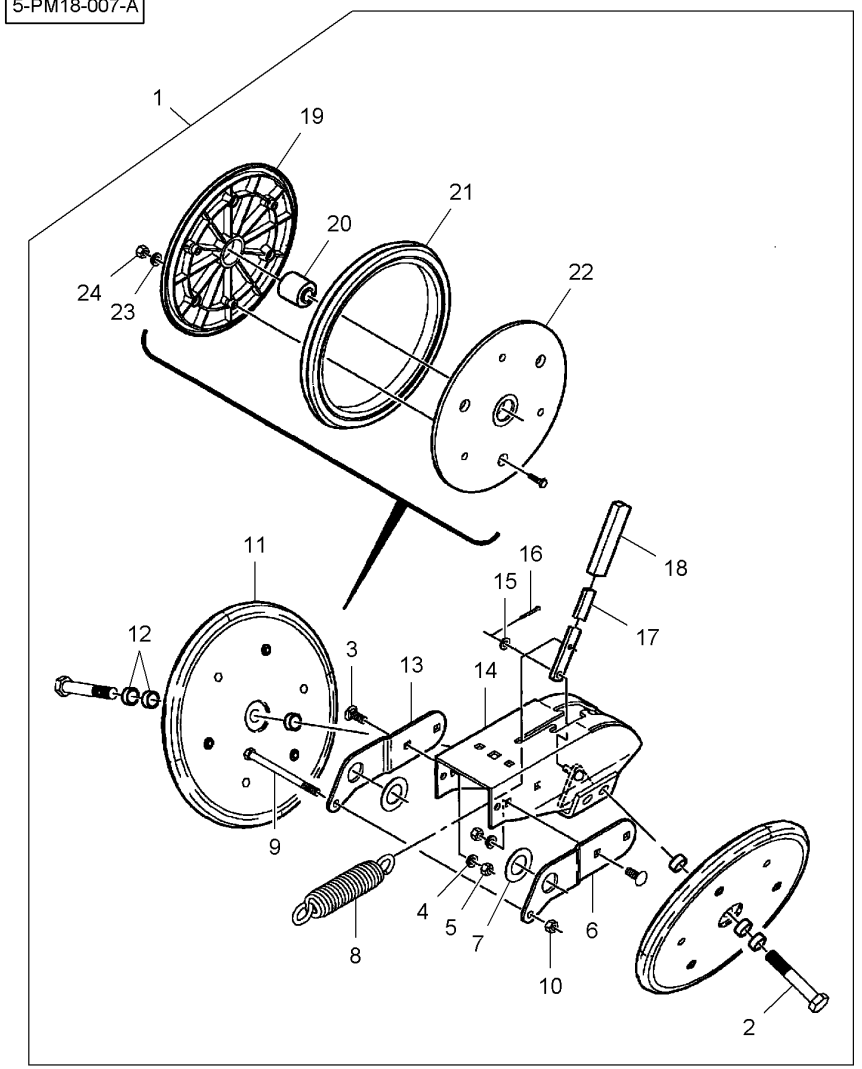


| | | | | | | |
|---|---|---|---|---|---|---|
| 1* | 6000563 | | [A] | **1** KIT, ATTACHMENT | JEU ACCESSOIRES<br>KIT ACCESSORI | SATZ ANBAUTEILE<br>JUEGO ACCESORIO |
| 2* | N858979 | 1 | M16 X 95 | **2** BOLT | BOULON<br>BULLONE | BOLZEN<br>BULON |
| 2 | 700725080 | 1 | M16 | **2** LOCKNUT | ECROU FREIN<br>AUTOBLOCCANTE | SICHERUNGSMUTTER<br>CONTRATUERCA |
| 3 | 390809X1 | 1 | M10 X 25 | **4** SCREW SPECIAL | VIS SPECIALE<br>VITE SPECIALE | SPEZIALSCHRAUBE<br>TORNILLO ESPEC. |
| 4 | 700708367 | 1 | | **4** LOCK WASHER | RONDELLE FREIN<br>RONDELLA ARRESTO | SICHERUNGSRING<br>ARANDELA SEGURID |
| 5 | 339402X1 | 1 | M10 | **4** NUT SPECIAL | ECROU SPECIAL<br>DADO SPECIALE | SPEZIALMUTTER<br>TUERCA ESPECIAL |
| 6 | N858761 | 1 | | **1** ARM | BRAS<br>BRACCIO | SCHARHEBEL<br>BRAZO |
| 7 | 700717669 | 1 | | **2** WASHER | RONDELLE<br>RONDELLA | SCHEIBE<br>ARANDELA |
| 8 | **N856594** | 1 | | **1** SPRING | RESSORT<br>MOLLA | FEDER<br>MUELLE |
| 9 | 339649X1 | 1 | M10 X 140 | **1** HEX. SOCK. SCREW | VIS TETE HEX<br>VITE PARKER | ZYLINDERSCHRAUBE<br>TORN.CAB.HUECA |
| 10 | PZND2084V | 1 | M10 | **1** LOCKNUT | ECROU FREIN<br>AUTOBLOCCANTE | SICHERUNGSMUTTER<br>CONTRATUERCA |
| 11 | **854262** | 1 | | **2** WHEEL | ROUE<br>RUOTA | RAD<br>RUEDA |
| 12 | **WZ5856** | 1 | | **6** BUSH | BAGUE<br>BOCCOLA | RING<br>CASQUILLO |
| 13 | N858762 | 1 | | **1** ARM | BRAS<br>BRACCIO | SCHARHEBEL<br>BRAZO |
| 14 | 855161 | 1 | | **1** FRAME | BATI<br>TELAIO | RAHMEN<br>BASTIDOR |
| 15 | 700717619 | 1 | | **1** WASHER | RONDELLE<br>RONDELLA | SCHEIBE<br>ARANDELA |
| 16 | 70918452 | 1 | 1/8" X 1 | **1** SPLIT PIN | GOUPILLE FENDUE<br>COPIGLIA | SPALTBOLZEN<br>PASADOR HENDIDO |
| 17 | 852017 | 1 | | **1** LEVER | LEVIER<br>LEVA | HEBEL<br>PALANCA |
| 18 | 852085 | 1 | | **1** HANDLE | MANCHE<br>IMPUGNATURA | GRIFF<br>EMPUNADURA |
| 19 | 854148 | 11 | | **1** WHEEL | ROUE<br>RUOTA | RAD<br>RUEDA |
| 20 | **854003** | 11 | | **1** BEARING ASSY | ROULEMENT<br>CUSCINETTO COMPL | RADIALLAGER<br>RODAMIENTO RAD |
| 21 | 17632 | 11 | | **1** TYRE | PNEU<br>PNEUMATICO | REIFEN<br>NEUMATICO |
| 22 | 70927401 | 11 | 1/4"-20 X 1 | **6** CAPSCREW | VIS BOUCHON<br>TAPPO A VITE | HUTSCHRAUBE<br>TORNILLO TAPON |
| 23 | 705699 | 11 | | **6** WASHER | RONDELLE<br>RONDELLA | SCHEIBE<br>ARANDELA |
| 24 | 355564X1 | 11 | 1/4"-20 | **6** NUT UNC | ECROU UNC<br>DADO UNC | MUTTER UNC<br>TUERCA UNC |

**Covering Wheels**
**Roues De Recouvrement**
**Druckrollen**
**Ruote Per Ricoprimento**
**Ruedas Tapadoras**

**60-60**

**HP ...**

5-PM18-007-A

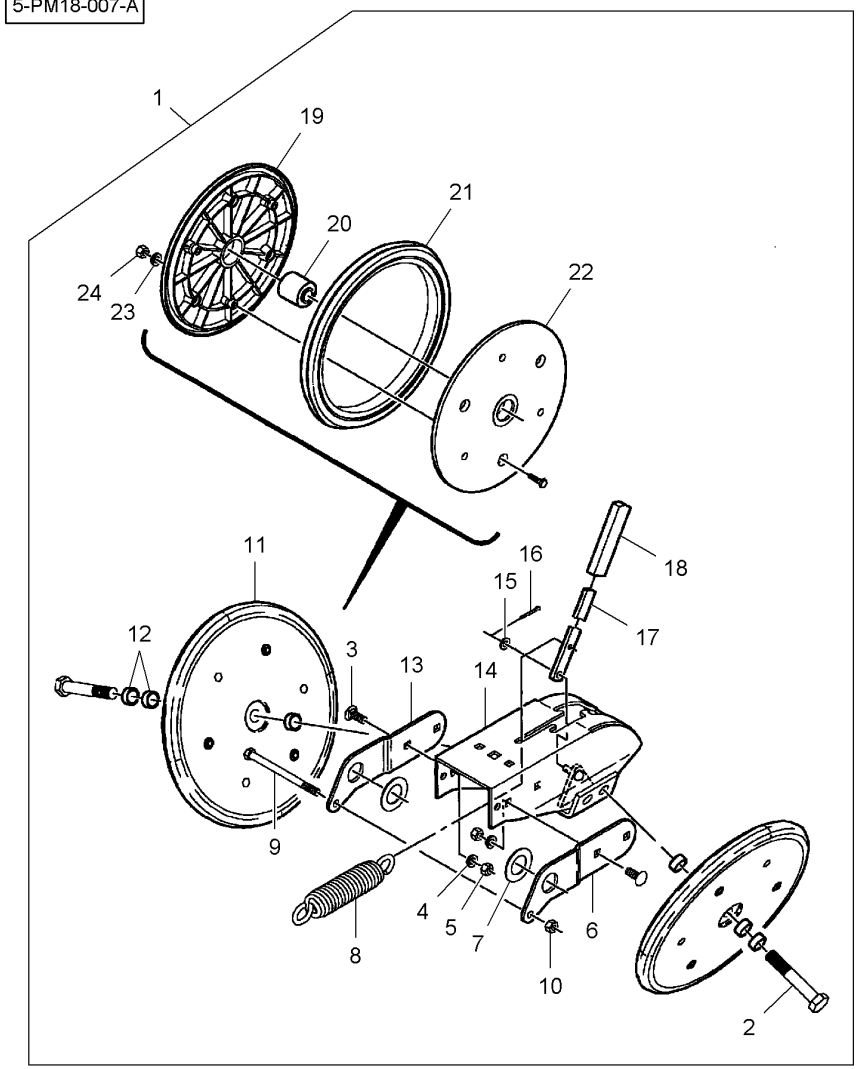


[A] RUBBER
CAOUTCHOUC
GUMMI
GOMMA
CAUCHO

**Covering Wheels**
**Roues De Recouvrement**
**Druckrollen**
**Ruote Per Ricoprimento**
**Ruedas Tapadoras**

**60-65**

**HR ...**

5-PM18-005-A

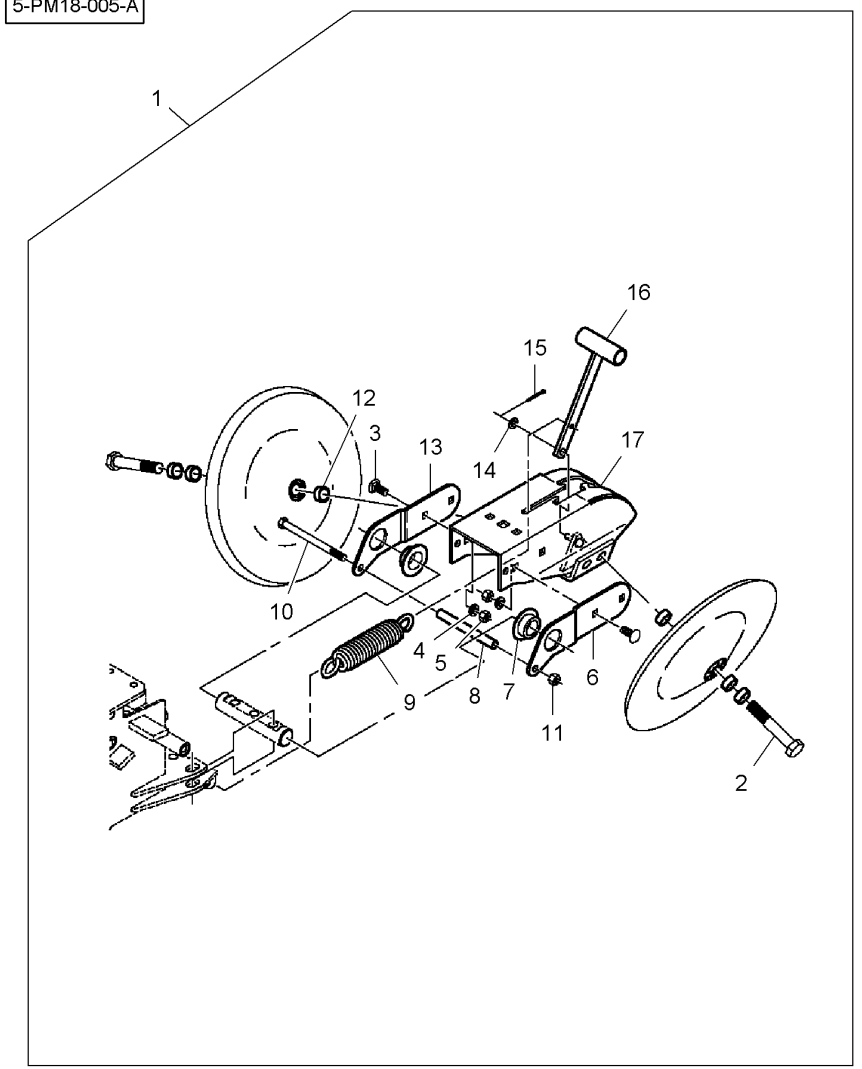


| | | | | | | |
|---|---|---|---|---|---|---|
| 1* | 6100460 | | | 1 | KIT, ATTACHMENT | JEU ACCESSOIRES<br>KIT ACCESSORI<br>SATZ ANBAUTEILE<br>JUEGO ACCESORIO |
| 2* | N858979 | 1 | M16 X 95 | 2 | BOLT | BOULON<br>BULLONE<br>BOLZEN<br>BULON |
| 2* | 700725080 | 1 | M16 | 2 | LOCKNUT | ECROU FREIN<br>AUTOBLOCCANTE<br>SICHERUNGSMUTTER<br>CONTRATUERCA |
| 3* | 7700636 | 1 | M10 X 25 | 4 | BOLT | BOULON<br>BULLONE<br>BOLZEN<br>BULON |
| 4* | 700708367 | 1 | M10 | 4 | LOCK WASHER | RONDELLE FREIN<br>RONDELLA ARRESTO<br>SICHERUNGSRING<br>ARANDELA SEGURID |
| 5* | 7704398 | 1 | M10 | 4 | NUT | ECROU<br>DADO<br>MUTTER<br>TUERCA |
| 6* | 700164081 | 1 | ◀ | 1 | ARM | BRAS<br>BRACCIO<br>SCHARHEBEL<br>BRAZO |
| 7* | **700700822** | 1 | | 2 | BEARING | COUSSINET<br>CUSCINETTO<br>LAGER<br>COJINETE |
| 8* | 700166327 | 1 | | 1 | SPACER | ENTRETOISE<br>DISTANZIALE<br>ABSTANDSTUECK<br>DISCO ESPACIADOR |
| 9* | **N856594** | 1 | | 1 | SPRING | RESSORT<br>MOLLA<br>FEDER<br>MUELLE |
| 10* | 339649X1 | 1 | M10 X 140 | 1 | HEX. SOCK. SCREW | VIS TETE HEX<br>VITE PARKER<br>ZYLINDERSCHRAUBE<br>TORN.CAB.HUECA |
| 11* | 7704679 | 1 | M10 | 1 | LOCKNUT | ECROU FREIN<br>AUTOBLOCCANTE<br>SICHERUNGSMUTTER<br>CONTRATUERCA |
| 12* | **WZ5856** | 1 | | 6 | BUSH | BAGUE<br>BOCCOLA<br>RING<br>CASQUILLO |
| 13* | 700164082 | 1 | ▶ | 1 | ARM | BRAS<br>BRACCIO<br>SCHARHEBEL<br>BRAZO |
| 14* | 700717619 | 1 | | 1 | WASHER | RONDELLE<br>RONDELLA<br>SCHEIBE<br>ARANDELA |
| 15* | 62083 | 1 | 1/8" X 1 | 1 | SPLIT PIN | GOUPILLE FENDUE<br>COPIGLIA<br>SPALTBOLZEN<br>PASADOR HENDIDO |
| 16* | 700164093 | 1 | | 1 | LEVER | LEVIER<br>LEVA<br>HEBEL<br>PALANCA |
| 17* | 855161 | 1 | | 1 | FRAME | BATI<br>TELAIO<br>RAHMEN<br>BASTIDOR |

**Covering Wheels**
**Roues De Recouvrement**
**Druckrollen**
**Ruote Per Ricoprimento**
**Ruedas Tapadoras**

**60-70**

**HR ...**

5-PM18-002-B

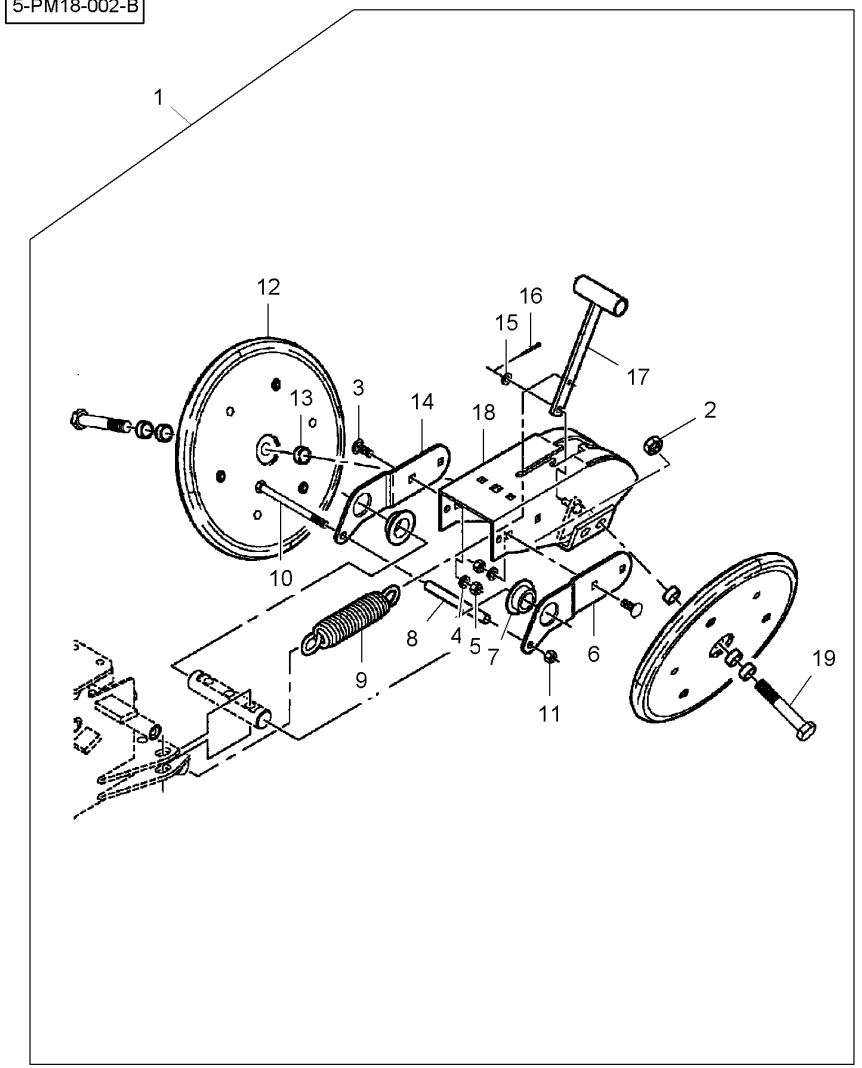


| | | | | | |
|---|---|---|---|---|---|
| 1* | 6000778 | [A] | 1 | KIT, ATTACHMENT | JEU ACCESSOIRES<br>KIT ACCESSORI |
| 1* | 6000779 | [B] | 1 | KIT, ATTACHMENT | JEU ACCESSOIRES<br>KIT ACCESSORI |
| 2* | 700725080 | 1 M16 | 2 | LOCKNUT | ECROU FREIN<br>AUTOBLOCCANTE |
| 3* | 7700636 | 1 M10 X 25 | 4 | BOLT | BOULON<br>BULLONE |
| 4* | 700708367 | 1 M10 | 4 | LOCK WASHER | RONDELLE FREIN<br>RONDELLA ARRESTO |
| 5* | 7704398 | 1 M10 | 4 | NUT | ECROU<br>DADO |
| 6* | 700164081 | 1 ◀ | 1 | ARM | BRAS<br>BRACCIO |
| 7* | **700700822** | 1 | 2 | BEARING | COUSSINET<br>CUSCINETTO |
| 8* | 700166327 | 1 | 1 | SPACER | ENTRETOISE<br>DISTANZIALE |
| 9* | **N856594** | 1 | 1 | SPRING | RESSORT<br>MOLLA |
| 10* | 339649X1 | 1 M10 X 140 | 1 | HEX. SOCK. SCREW | VIS TETE HEX<br>VITE PARKER |
| 11* | 7704679 | 1 M10 | 1 | LOCKNUT | ECROU FREIN<br>AUTOBLOCCANTE |
| 12* | **854262** | 1 [A]<br>60-75 No 1 | 2 | WHEEL | ROUE<br>RUOTA |
| 12* | 854077 | 1 [B]<br>60-80 No 1 | 2 | WHEEL | ROUE<br>RUOTA |
| 13* | **WZ5856** | 1 | 6 | BUSH | BAGUE<br>BOCCOLA |
| 14* | 700164082 | 1 ▶ | 1 | ARM | BRAS<br>BRACCIO |
| 15* | 700717619 | 1 | 1 | WASHER | RONDELLE<br>RONDELLA |
| 16* | 62083 | 1 1/8" X 1 | 1 | SPLIT PIN | GOUPILLE FENDUE<br>COPIGLIA |
| 17* | 700164093 | 1 | 1 | LEVER | LEVIER<br>LEVA |
| 18* | 855161 | 1 | 1 | FRAME | BATI<br>TELAIO |
| 19* | N858979 | 1 M16 X 95 | 2 | BOLT | BOULON<br>BULLONE |

| | | |
|---|---|---|
| | | SATZ ANBAUTEILE<br>JUEGO ACCESORIO |
| | | SATZ ANBAUTEILE<br>JUEGO ACCESORIO |
| | | SICHERUNGSMUTTER<br>CONTRATUERCA |
| | | BOLZEN<br>BULON |
| | | SICHERUNGSRING<br>ARANDELA SEGURID |
| | | MUTTER<br>TUERCA |
| | | SCHARHEBEL<br>BRAZO |
| | | LAGER<br>COJINETE |
| | | ABSTANDSTUECK<br>DISCO ESPACIADOR |
| | | FEDER<br>MUELLE |
| | | ZYLINDERSCHRAUBE<br>TORN.CAB.HUECA |
| | | SICHERUNGSMUTTER<br>CONTRATUERCA |
| | | RAD<br>RUEDA |
| | | RAD<br>RUEDA |
| | | RING<br>CASQUILLO |
| | | SCHARHEBEL<br>BRAZO |
| | | SCHEIBE<br>ARANDELA |
| | | SPALTBOLZEN<br>PASADOR HENDIDO |
| | | HEBEL<br>PALANCA |
| | | RAHMEN<br>BASTIDOR |
| | | BOLZEN<br>BULON |

[A] RUBBER
CAOUTCHOUC
GUMMI
GOMMA
CAUCHO

[B] CAST IRON
FONTE
GUSSEISEN
GHISA
FUNDICION

| Covering Wheels<br>Roues De Recouvrement<br>Druckrollen<br>Ruote Per Ricoprimento<br>Ruedas Tapadoras | 60-75 | Rubber<br>Caoutchouc<br>Gummi<br>Gomma<br>Caucho |
|---|---|---|

5-PM18-003-A

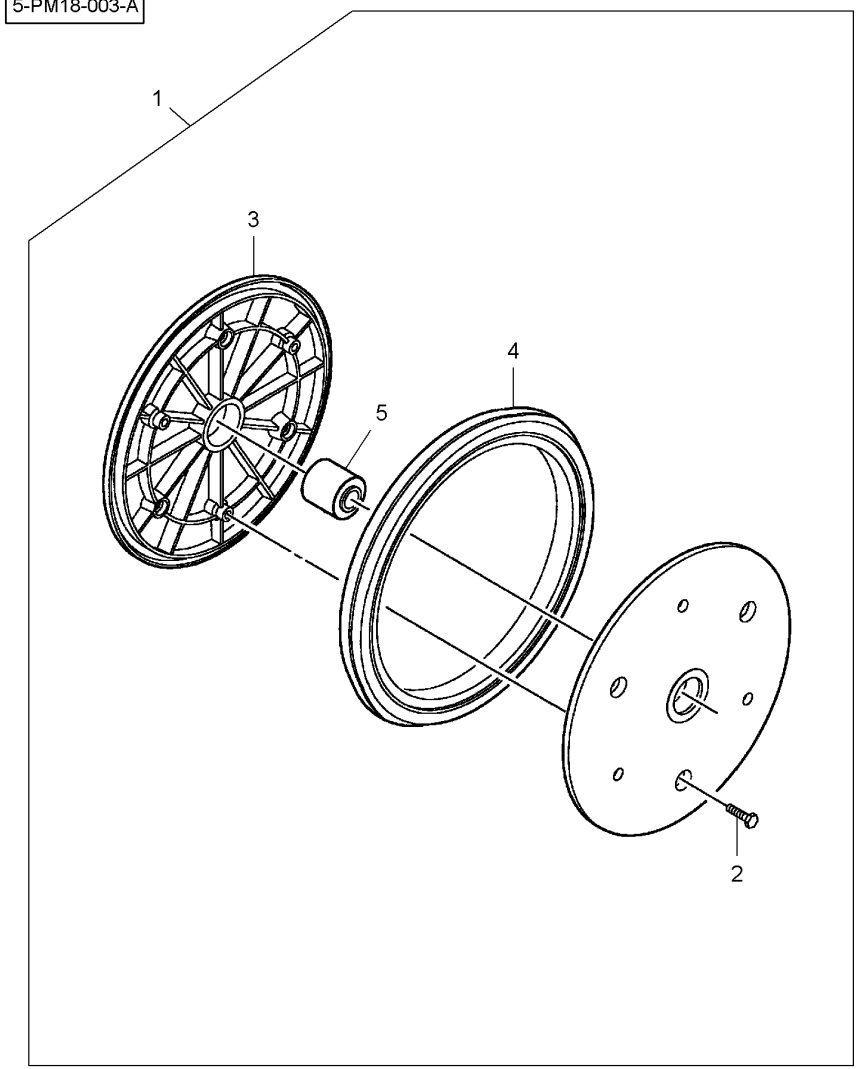


| | | | | | |
|---|---|---|---|---|---|
| 1* | **854262** | | **1** WHEEL | ROUE<br>RUOTA | RAD<br>RUEDA |
| 2* | 70927401 | 1 1/4"-20 X 1 | **6** CAPSCREW | VIS BOUCHON<br>TAPPO A VITE | HUTSCHRAUBE<br>TORNILLO TAPON |
| 2* | 705699 | 1 No 12 | **6** WASHER | RONDELLE<br>RONDELLA | SCHEIBE<br>ARANDELA |
| 2* | 70916622 | 1 1/4"-20 | **6** NUT UNC | ECROU UNC<br>DADO UNC | MUTTER UNC<br>TUERCA UNC |
| 3* | 854148 | 1 | **1** WHEEL | ROUE<br>RUOTA | RAD<br>RUEDA |
| 4* | 17632 | 1 | **1** TYRE | PNEU<br>PNEUMATICO | REIFEN<br>NEUMATICO |
| 5* | **854003** | 1 | **1** BEARING ASSY | ROULEMENT<br>CUSCINETTO COMPL | RADIALLAGER<br>RODAMIENTO RAD |

| Covering Wheels<br>Roues De Recouvrement<br>Druckrollen<br>Ruote Per Ricoprimento<br>Ruedas Tapadoras | 60-80 | Cast Iron<br>Fonte<br>Gusseisen<br>Ghisa<br>Fundición |
|---|---|---|

5-PM18-004-A

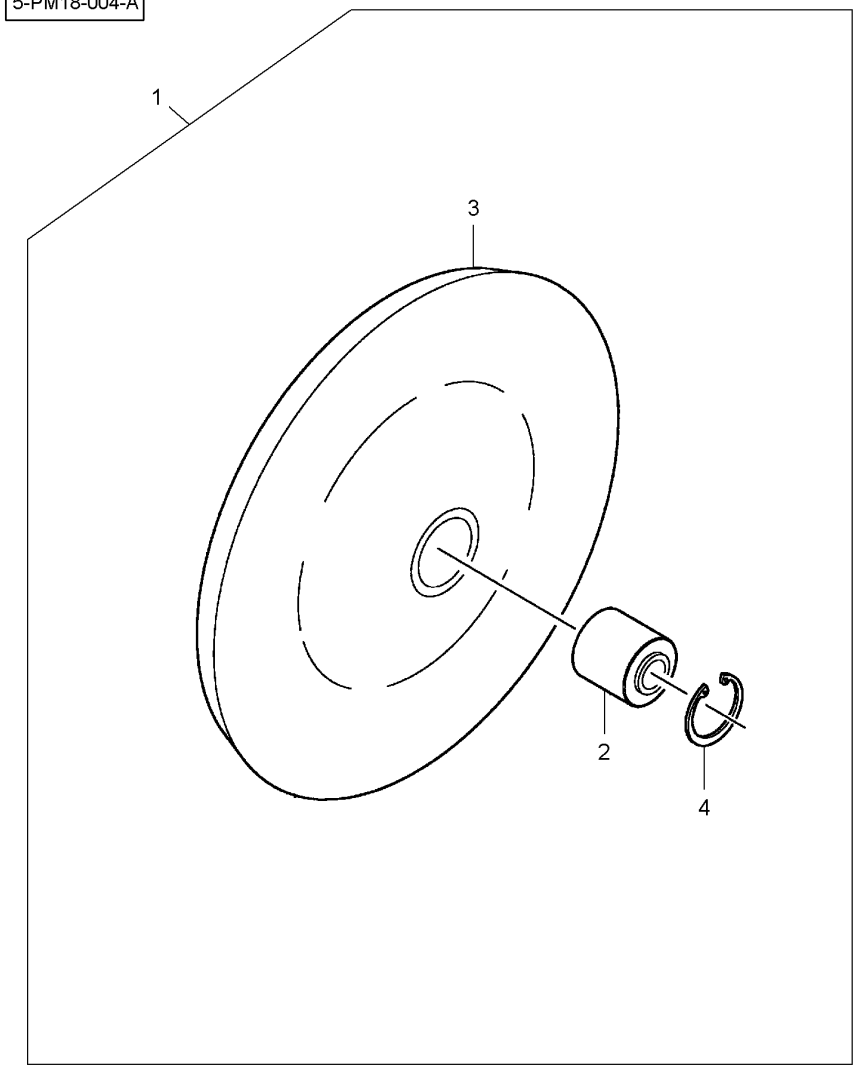


| | | | | | |
|---|---|---|---|---|---|
| 1* | 854077 | | **1** | WHEEL | ROUE<br>RUOTA | RAD<br>RUEDA |
| 2* | **854003** | 1 | **1** | BEARING ASSY | ROULEMENT<br>CUSCINETTO COMPL | RADIALLAGER<br>RODAMIENTO RAD |
| 3* | 854043 | 1 | **1** | WHEEL | ROUE<br>RUOTA | RAD<br>RUEDA |
| 4* | 7033699 | 1 | **1** | RING | ANNEAU<br>ANELLO | RING.<br>ANILLO |

| Row Unit<br>Rang Unitaire<br>Einheitsreihe<br>Linea Unitaria<br>Línea Unitaria | 60-85 | Protection<br>Protection<br>Schutz<br>Protezione<br>Protección |
|---|---|---|

5-PL06-001-B

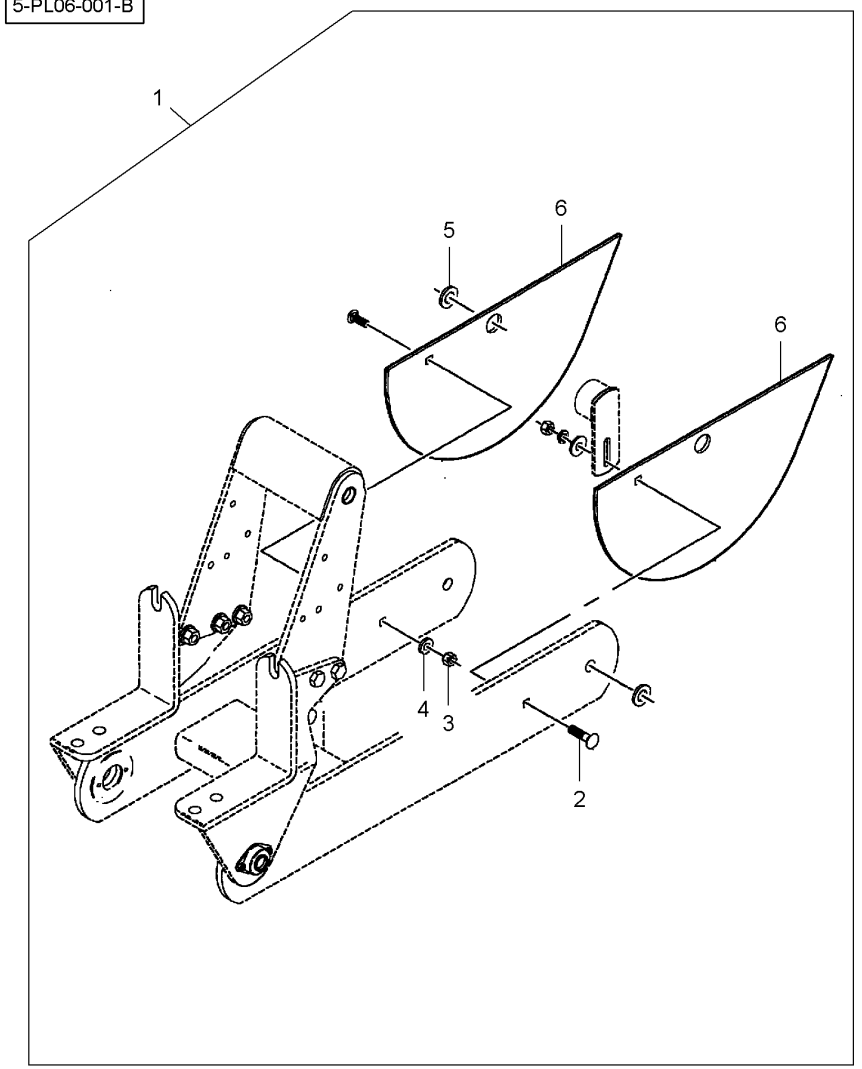


| | | | | | | |
|---|---|---|---|---|---|---|
| 1 | 2086669 | | | **1** | KIT, ATTACHMENT | JEU ACCESSOIRES<br>KIT ACCESSORI | SATZ ANBAUTEILE<br>JUEGO ACCESORIO |
| 2 | 70929094 | 1 | 1/2"-13 X 2 | **2** | BOLT | BOULON<br>BULLONE | BOLZEN<br>BULON |
| 3 | 6834402 | 1 | 11/16" | **2** | WASHER | RONDELLE<br>RONDELLA | SCHEIBE<br>ARANDELA |
| 4 | W915793-4 | 1 | 1/2"-13 | **2** | LOCKNUT | ECROU FREIN<br>AUTOBLOCCANTE | SICHERUNGSMUTTER<br>CONTRATUERCA |
| 5 | 353762X1 | 1 | 13/16" | **4** | FLAT WASHER | RONDELLE PLATE<br>RONDELLE PIANA | UNTERLEGSCHEIBEN<br>ARANDELA PLANA |
| 6 | W248363B | 1 | | **4** | GUARD | GARDE<br>PROTEZIONE | SCHUTZVORR<br>DEFENSA |

| Row Unit<br>Rang Unitaire<br>Einheitsreihe<br>Linea Unitaria<br>Línea Unitaria | 60-90 | Weight Carrier<br>Support De Masses<br>Gewichtsträger<br>Supporto Di Masse<br>Soporte De Masas |
|---|---|---|

5-PL06-002-B

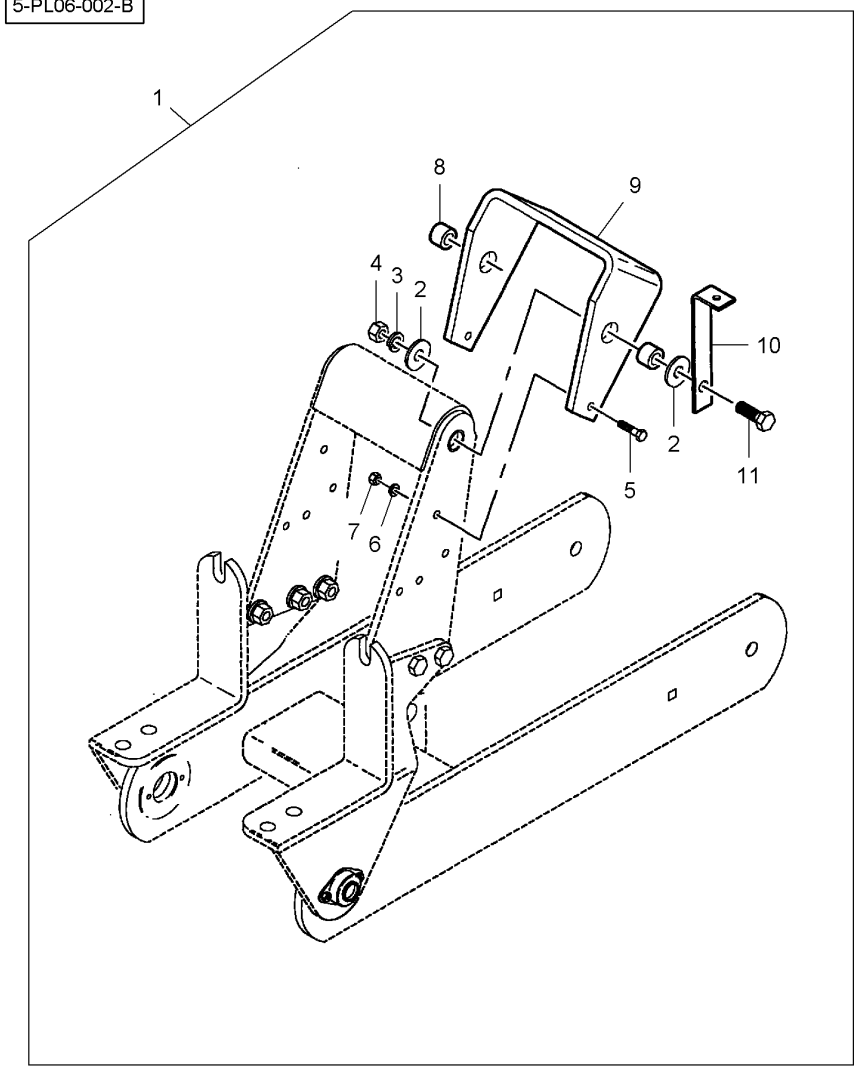


| | | | | | |
|---|---|---|---|---|---|
| 1* | 9010100 | | 1 | KIT, ATTACHMENT | JEU ACCESSOIRES<br>KIT ACCESSORI<br>SATZ ANBAUTEILE<br>JUEGO ACCESORIO |
| 2* | 6834402 | 1 5/8" | 4 | WASHER | RONDELLE<br>RONDELLA<br>SCHEIBE<br>ARANDELA |
| 3* | 705061 | 1 5/8" | 2 | LOCK WASHER | RONDELLE FREIN<br>RONDELLA ARRESTO<br>SICHERUNGSRING<br>ARANDELA SEGURID |
| 4* | 704130 | 1 5/8"-11 | 2 | NUT UNC | ECROU UNC<br>DADO UNC<br>MUTTER UNC<br>TUERCA UNC |
| 5* | 703603 | 1 3/8"-16 X 1-1/2 | 2 | BOLT UNC | BOULON UNC<br>BULLONE UNC<br>MASCH.SCHRB.UNC<br>PERNO UNC |
| 6* | 705038 | 1 3/8" | 2 | LOCK WASHER | RONDELLE FREIN<br>RONDELLA ARRESTO<br>SICHERUNGSRING<br>ARANDELA SEGURID |
| 7* | 704023 | 1 3/8"-16 | 2 | NUT UNC | ECROU UNC<br>DADO UNC<br>MUTTER UNC<br>TUERCA UNC |
| 8* | 851819 | 1 | 2 | SPACER | ENTRETOISE<br>DISTANZIALE<br>ABSTANDSTUECK<br>DISCO ESPACIADOR |
| 9* | 851820 | 1 | 1 | BRACKET | SUPPORT FIXATION<br>STAFFETTA<br>HALTEARM<br>SOPORTE |
| 10* | 853335 | 1 | 1 | SUPPORT | SUPPORT<br>SOPPORTO<br>TRAGER<br>SOPORTE |
| 11* | 703793 | 1 5/8"-11 X 1-3/4 | 2 | BOLT UNC | BOULON UNC<br>BULLONE UNC<br>MASCH.SCHRB.UNC<br>PERNO UNC |

**Row Unit**
**Rang Unitaire**
**Einheitsreihe**
**Linea Unitaria**
**Línea Unitaria**

**60-95**

**Weight Carrier - With 7" X 7" Frame**
**Support De Masses - Avec Bati 7" X 7"**
**Gewichtsträger - Mit 7" X 7" Rahmen**
**Supporto Di Masse - Con Telaio 7" X 7"**
**Soporte De Masas - Con Bastidor 7" X 7"**

5-PL06-003-A

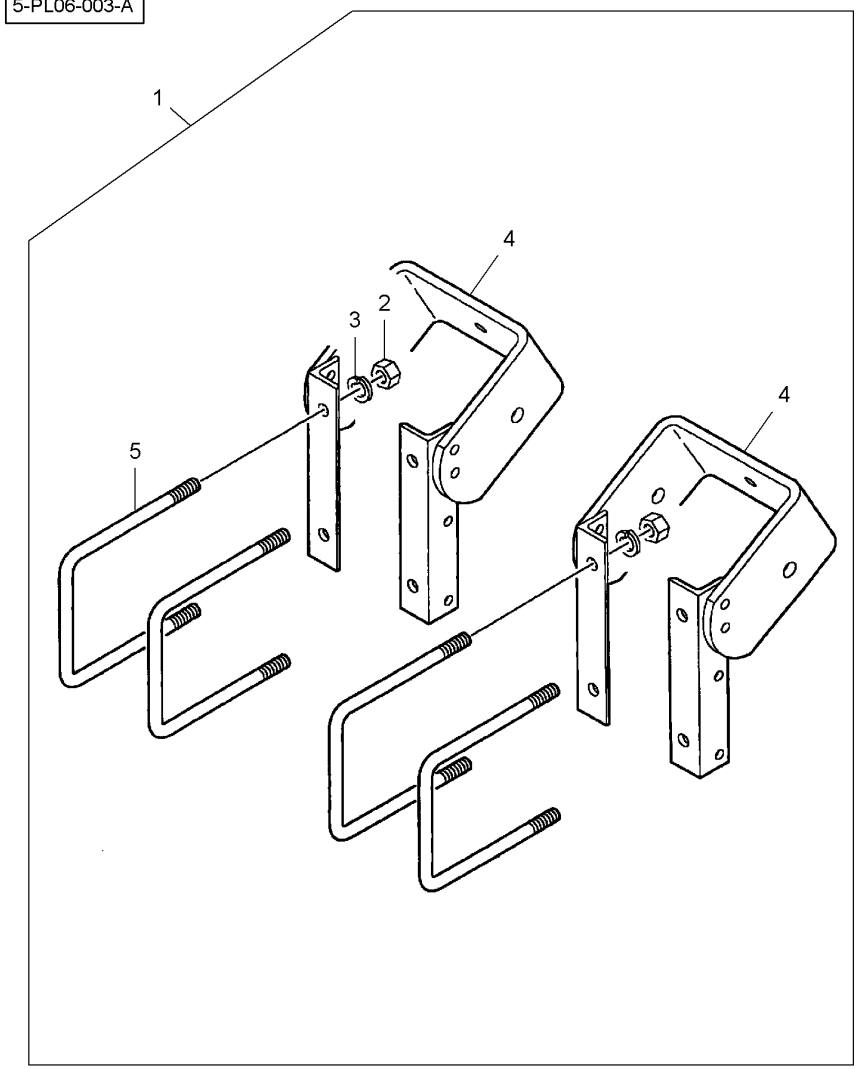


| | | | | | | |
|---|---|---|---|---|---|---|
| 1* | 6000177 | | | **1** | KIT, ATTACHMENT | JEU ACCESSOIRES<br>KIT ACCESSORI<br>SATZ ANBAUTEILE<br>JUEGO ACCESORIO |
| 2* | 353433X1 | 1 | 5/8" | **8** | LOCK WASHER | RONDELLE FREIN<br>RONDELLA ARRESTO<br>SICHERUNGSRING<br>ARANDELA SEGURID |
| 3* | 70932665 | 1 | 5/8"-11 | **8** | NUT UNC | ECROU UNC<br>DADO UNC<br>MUTTER UNC<br>TUERCA UNC |
| 4* | W248120B | 1 | | **2** | BRACKET | SUPPORT FIXATION<br>STAFFETTA<br>HALTEARM<br>SOPORTE |
| 5* | **W232588B** | 1 | 5/8"-11 | **4** | U BOLT | ETRIER FILETE<br>BULLONE A STAFFA<br>BUEGELSCHRAUBE<br>BRIDA EN U |

**Wheels**
**Roues**
**Räder**
**Ruote**
**Ruedas**

# 60-100

5-PL43-002-C

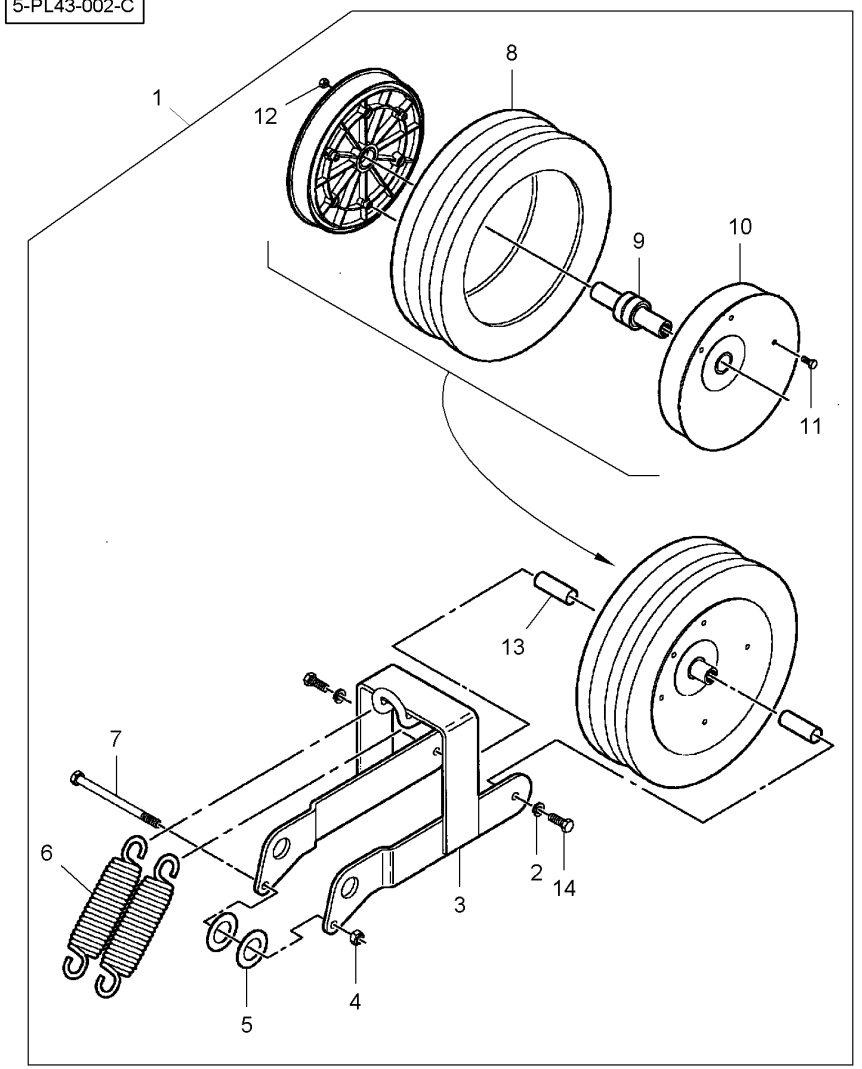


| | | | | | | |
|---|---|---|---|---|---|---|
| 1* | 6000551 | | | **1** | KIT, ATTACHMENT | JEU ACCESSOIRES<br>KIT ACCESSORI |
| 2* | 705038 | 1 | 3/8" | **2** | LOCK WASHER | RONDELLE FREIN<br>RONDELLA ARRESTO |
| 3* | N857549 | 1 | | **1** | BRACKET | SUPPORT FIXATION<br>STAFFETTA |
| 4* | 7704679 | 1 | M10 | **1** | LOCKNUT | ECROU FREIN<br>AUTOBLOCCANTE |
| 5* | 700717669 | 1 | | **2** | WASHER | RONDELLE<br>RONDELLA |
| 6* | **N856594** | 1 | | **2** | SPRING | RESSORT<br>MOLLA |
| 7* | 339649X1 | 1 | M10 X 140 | **1** | HEX. SOCK. SCREW | VIS TETE HEX<br>VITE PARKER |
| 8* | W247657B | 1 | | **1** | TYRE | PNEU<br>PNEUMATICO |
| 9* | W247658B | 1 | | **1** | BEARING ASSY | ROULEMENT<br>CUSCINETTO COMPL |
| 10* | 853996 | 1 | 4" X 12 | **2** | WHEEL | ROUE<br>RUOTA |
| 11* | 7703499 | 1 | 5/16"-18 X 3/4 | **6** | BOLT UNC | BOULON UNC<br>BULLONE UNC |
| 12* | Y704015 | 1 | 5/16"-18 | **6** | NUT UNC | ECROU UNC<br>DADO UNC |
| 13* | W248430B | 1 | | **2** | SLEEVE | MANCHON<br>MANICOTTO |
| 14* | 703249 | 1 | 3/8"-16 X 1 | **2** | BOLT UNC | BOULON UNC<br>BULLONE UNC |

| | | | | | |
|---|---|---|---|---|---|
| SATZ ANBAUTEILE<br>JUEGO ACCESORIO | | | | | |
| SICHERUNGSRING<br>ARANDELA SEGURID | | | | | |
| HALTEARM<br>SOPORTE | | | | | |
| SICHERUNGSMUTTER<br>CONTRATUERCA | | | | | |
| SCHEIBE<br>ARANDELA | | | | | |
| FEDER<br>MUELLE | | | | | |
| ZYLINDERSCHRAUBE<br>TORN.CAB.HUECA | | | | | |
| REIFEN<br>NEUMATICO | | | | | |
| RADIALLAGER<br>RODAMIENTO RAD | | | | | |
| RAD<br>RUEDA | | | | | |
| MASCH.SCHRB.UNC<br>PERNO UNC | | | | | |
| MUTTER UNC<br>TUERCA UNC | | | | | |
| HUELSE<br>MANGUITO | | | | | |
| MASCH.SCHRB.UNC<br>PERNO UNC | | | | | |

70

**Hopper**
**Tremie**
**Korntank**
**Tramoggia**
**Tolva**

**70-5**

5-PL07-001-B

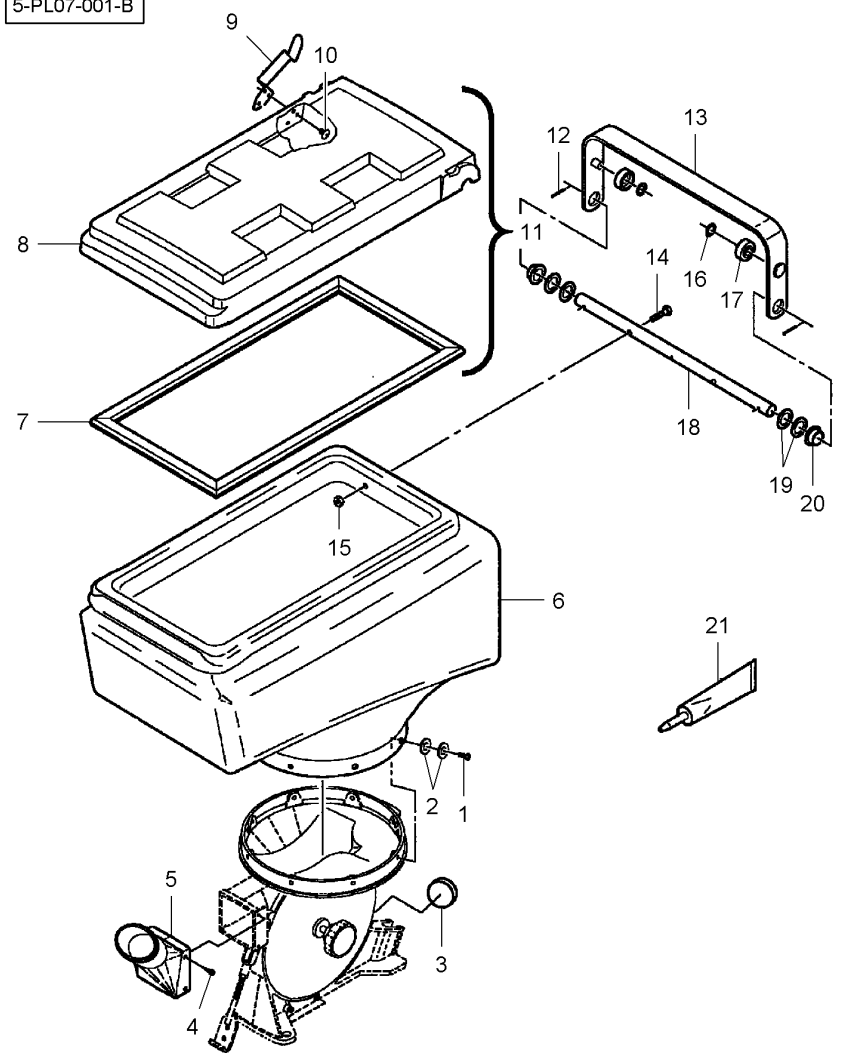


| | | | | | | |
|---|---|---|---|---|---|---|
| 1 | 7771991 | M6 X 20 | **8** | CAPSCREW | VIS BOUCHON<br>TAPPO A VITE | HUTSCHRAUBE<br>TORNILLO TAPON |
| 2 | **700720580** | | **16** | SPRING WASHER | RONDELLE ELASTIQ<br>RONDELLA ELASTI. | FEDERSCHEIBE<br>ARANDELA ELASTI. |
| 3 | **700157568** | 1"-1/2 | **1** | PLUG | BOUCHON<br>TAPPO | STOPFEN<br>TAPON |
| 4 | 3019030X1 | M4 X 12 | **4** | SCREW | VIS<br>VITE | SCHRAUBE<br>TORNILLO |
| 5 | 853090 | | **1** | ADAPTOR | ADAPTATEUR<br>ADATTATORE | REDUZIERNIPPEL<br>ADAPTADOR |
| 6 | N858926 | | **1** | HOPPER | TREMIE<br>TRAMOGGIA | KORNTANK<br>TOLVA |
| 7* | 855041 | | **1** | SEAL | JOINT ETANCHEITE<br>GIUNTO ROTONDO | DICHTRING<br>JUNTA REDONDA |
| 8* | 854700 | | **1** | LID | PLAQUE COUVERCLE<br>COPERTA | ABDECKPLATTE<br>COBERTURA |
| 9* | 700724453 | | **1** | LATCH | VERROU<br>DENTE DI ARRESTO | KLINKE<br>TOPE |
| 10* | 70937253 | | **3** | RIVET | RIVET<br>RIVETTO | NIET<br>REMACHE |
| 11* | 700724455 | | **1** | LID | PLAQUE COUVERCLE<br>COPERTA | ABDECKPLATTE<br>COBERTURA |
| 11* | 855041 | 11 | **1** | SEAL | JOINT ETANCHEITE<br>GIUNTO ROTONDO | DICHTRING<br>JUNTA REDONDA |
| 11* | 854700 | 11 | **1** | LID | PLAQUE COUVERCLE<br>COPERTA | ABDECKPLATTE<br>COBERTURA |
| 11* | 700724453 | 11 | **1** | LATCH | VERROU<br>DENTE DI ARRESTO | KLINKE<br>TOPE |
| 11* | 70937253 | 11 | **3** | RIVET | RIVET<br>RIVETTO | NIET<br>REMACHE |
| 12* | 70918452 | 1/8" X 1 | **2** | SPLIT PIN | GOUPILLE FENDUE<br>COPIGLIA | SPALTBOLZEN<br>PASADOR HENDIDO |
| 13* | 854805 | | **1** | GRIP | POIGNEE<br>MANIGLIA | HANDGRIFF<br>MANGO |
| 14* | 70950450 | M6 X 25 | **2** | CAPSCREW | VIS BOUCHON<br>TAPPO A VITE | HUTSCHRAUBE<br>TORNILLO TAPON |
| 15* | 7704703 | M6 | **2** | NUT | ECROU<br>DADO | MUTTER<br>TUERCA |
| 16* | **854808** | | **2** | SNAPRING | SEGMENT ARRET<br>ANELLO SIEGER | SPRENGRING<br>ANILLA RETENCION |
| 17* | **854806** | | **2** | ROLLER | GALET<br>ROTELLA | ROLLE<br>RODILLO |
| 18* | 854804 | | **1** | SHAFT | ARBRE<br>ALBERO | WELLE<br>ARBOL |
| 19* | **17813** | | **4** | WASHER | RONDELLE<br>RONDELLA | SCHEIBE<br>ARANDELA |
| 20* | **854807** | | **2** | BEARING FLANGE | FLASQUE ROULT<br>BEARING FLANGE | LAGERFLANSCH<br>BEARING FLANGE |
| 21* | 79021649 | | **1** | SEALER | PATE JOINT<br>SIGILLO | DICHTUNGSMASSE<br>TAPAPOROS |

**Hopper**
**Tremie**
**Korntank**
**Tramoggia**
**Tolva**

**70-10**

5-PL07-002-B

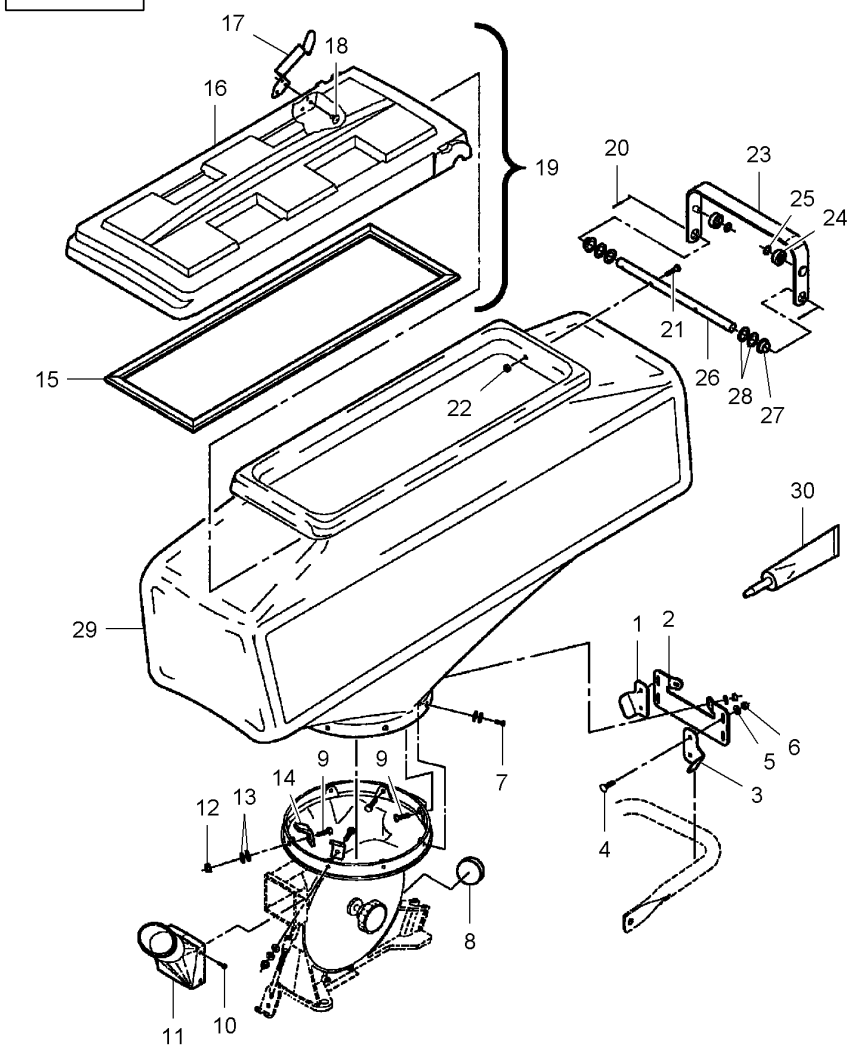


| | | | | | | |
|---|---|---|---|---|---|---|
| 1* | 700160193 | ▶ | 1 | SUPPORT | SUPPORT<br>SOPPORTO | TRAGER<br>SOPORTE |
| 2* | 700160190 | | 1 | PLATE | PLAQUE<br>PIASTRA | PLATTE<br>PLATO |
| 3* | 700160191 | ◀ | 1 | SUPPORT | SUPPORT<br>SOPPORTO | TRAGER<br>SOPORTE |
| 4* | 7700602 | M6 X 25 | 4 | BOLT | BOULON<br>BULLONE | BOLZEN<br>BULON |
| 5* | 705707 | 1/4" | 6 | WASHER | RONDELLE<br>RONDELLA | SCHEIBE<br>ARANDELA |
| 6* | 70950984 | M6 | 6 | LOCKNUT | ECROU FREIN<br>AUTOBLOCCANTE | SICHERUNGSMUTTER<br>CONTRATUERCA |
| 7* | 7771991 | [A]<br>M6 X 20 | 6 | CAPSCREW | VIS BOUCHON<br>TAPPO A VITE | HUTSCHRAUBE<br>TORNILLO TAPON |
| 8* | **700157568** | [A]<br>1"-1/2 | 1 | PLUG | BOUCHON<br>TAPPO | STOPFEN<br>TAPON |
| 9* | 700721443 | M6 X 35 | 4 | CAPSCREW | VIS BOUCHON<br>TAPPO A VITE | HUTSCHRAUBE<br>TORNILLO TAPON |
| 10* | 3019030X1 | [A]<br>M4 X 12 | 4 | SCREW | VIS<br>VITE | SCHRAUBE<br>TORNILLO |
| 11* | 853090 | [A] | 1 | ADAPTOR | ADAPTATEUR<br>ADATTATORE | REDUZIERNIPPEL<br>ADAPTADOR |
| 12* | 700716694 | M6 | 2 | LOCKNUT | ECROU FREIN<br>AUTOBLOCCANTE | SICHERUNGSMUTTER<br>CONTRATUERCA |
| 13* | **700720580** | | 16 | SPRING WASHER | RONDELLE ELASTIQ<br>RONDELLA ELASTI. | FEDERSCHEIBE<br>ARANDELA ELASTI. |
| 14* | 700159809 | | 2 | CLIP | PATTE D'ATTACHE<br>FERMAGLIO | SCHELLE<br>CLIP |
| 15* | 700156351 | | 1 | GASKET | JOINT<br>GIUNTO PIANO | FLACHDICHTUNG<br>JUNTA PLANA |
| 16* | 700156352 | | 1 | LID | PLAQUE COUVERCLE<br>COPERTA | ABDECKPLATTE<br>COBERTURA |
| 16* | 700156351 | 16 | 1 | GASKET | JOINT<br>GIUNTO PIANO | FLACHDICHTUNG<br>JUNTA PLANA |
| 17* | 700724453 | | 1 | LATCH | VERROU<br>DENTE DI ARRESTO | KLINKE<br>TOPE |
| 18* | 70937253 | | 3 | RIVET | RIVET<br>RIVETTO | NIET<br>REMACHE |
| 19* | 700724456 | | 1 | LID | PLAQUE COUVERCLE<br>COPERTA | ABDECKPLATTE<br>COBERTURA |
| 19* | 700156351 | 19 | 1 | GASKET | JOINT<br>GIUNTO PIANO | FLACHDICHTUNG<br>JUNTA PLANA |
| 19* | 700156352 | 19 | 1 | LID | PLAQUE COUVERCLE<br>COPERTA | ABDECKPLATTE<br>COBERTURA |
| 19* | 700724453 | 19 | 1 | LATCH | VERROU<br>DENTE DI ARRESTO | KLINKE<br>TOPE |
| 19* | 70937253 | 19 | 3 | RIVET | RIVET<br>RIVETTO | NIET<br>REMACHE |
| 20* | 70918452 | 1/8" X 1 | 2 | SPLIT PIN | GOUPILLE FENDUE<br>COPIGLIA | SPALTBOLZEN<br>PASADOR HENDIDO |
| 21* | 70950450 | M6 X 25 | 2 | CAPSCREW | VIS BOUCHON<br>TAPPO A VITE | HUTSCHRAUBE<br>TORNILLO TAPON |

**Hopper**
**Tremie**
**Korntank**
**Tramoggia**
**Tolva**

**70-10**

5-PL07-002-B

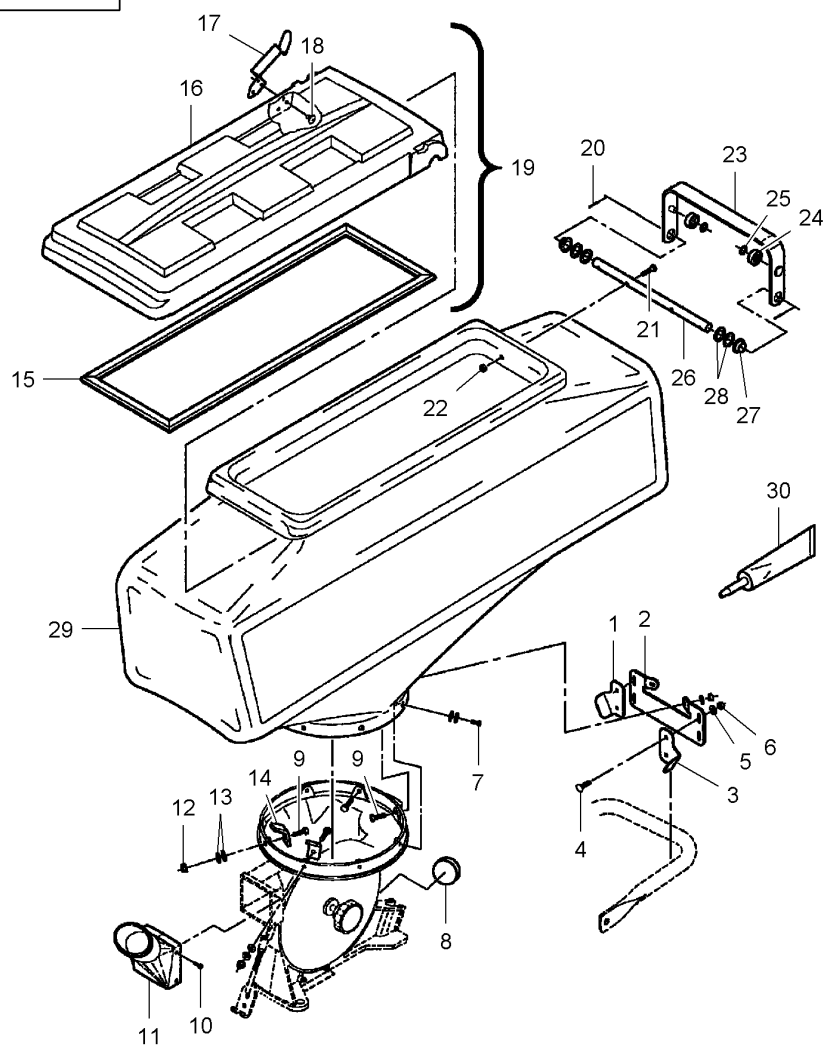


| | | | | | |
|---|---|---|---|---|---|
| 22* | 7704703 | M6 | **2** | NUT | ECROU<br>DADO<br>TUERCA |
| 23* | 700156408 | | **1** | GRIP | POIGNEE<br>MANIGLIA<br>HANDGRIFF<br>MANGO |
| 24* | **854806** | | **2** | ROLLER | GALET<br>ROTELLA<br>ROLLE<br>RODILLO |
| 25* | **854808** | | **2** | SNAPRING | SEGMENT ARRET<br>ANELLO SIEGER<br>SPRENGRING<br>ANILLA RETENCION |
| 26* | 700156409 | | **1** | SHAFT | ARBRE<br>ALBERO<br>WELLE<br>ARBOL |
| 27* | **854807** | | **2** | BEARING FLANGE | FLASQUE ROULT<br>BEARING FLANGE<br>LAGERFLANSCH<br>BEARING FLANGE |
| 28* | **17813** | | **4** | WASHER | RONDELLE<br>RONDELLA<br>SCHEIBE<br>ARANDELA |
| 29* | N858971 | | **1** | HOPPER | TREMIE<br>TRAMOGGIA<br>KORNTANK<br>TOLVA |
| 30* | 79021649 | | **1** | SEALER | PATE JOINT<br>SIGILLO<br>DICHTUNGSMASSE<br>TAPAPOROS |

[A] NOT INCLUDED IN KIT
N'EST PAS COMPRIS DANS LE KIT
NICHT IN SATZ ENTHALTEN IST
NON E COMPRESO IN KIT
NO SE INCLUYE EN KIT

| Hopper<br>Tremie<br>Korntank<br>Tramoggia<br>Tolva | 70-15 | Cover<br>Couvercle<br>Abdeckung<br>Coperchio<br>Tapa |
|---|---|---|

5-PL07-005-B

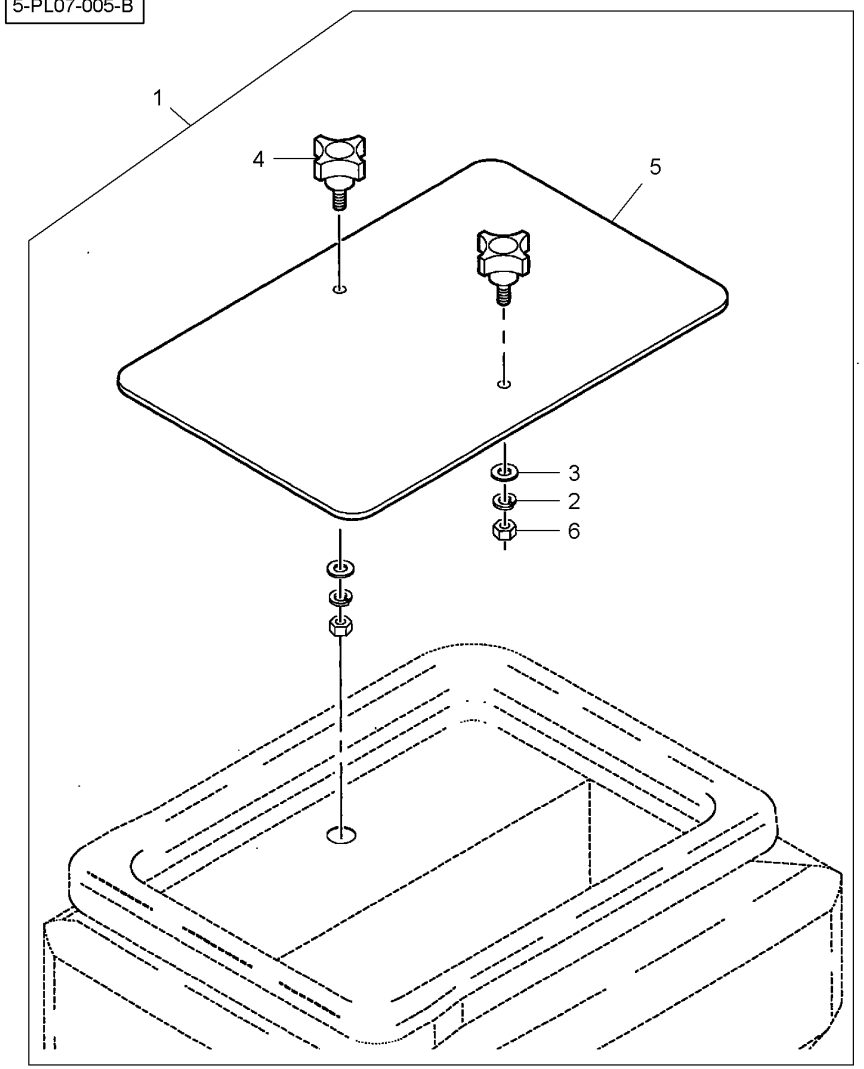


| | | | | | | |
|---|---|---|---|---|---|---|
| 1 | 6100221 | | | **1** | KIT, ATTACHMENT | JEU ACCESSOIRES<br>KIT ACCESSORI | SATZ ANBAUTEILE<br>JUEGO ACCESORIO |
| 2 | 70917356 | 1 | 5/16" | **4** | LOCK WASHER | RONDELLE FREIN<br>RONDELLA ARRESTO | SICHERUNGSRING<br>ARANDELA SEGURID |
| 3 | 700717619 | 1 | | **4** | WASHER | RONDELLE<br>RONDELLA | SCHEIBE<br>ARANDELA |
| 4 | 852314 | 1 | | **4** | KNOB | POMMEAU<br>POMELO | KNOPF<br>POMO |
| 5 | 854476 | 1 | | **2** | SEAL | JOINT ETANCHEITE<br>GIUNTO ROTONDO | DICHTRING<br>JUNTA REDONDA |
| 6 | **70917372** | 1 | 5/16"-18 | **4** | NUT | ECROU<br>DADO | MUTTER<br>TUERCA |

**Hopper**
**Tremie**
**Korntank**
**Tramoggia**
**Tolva**

# 70-20

**Meter**
**Compteur**
**Zähler**
**Contatore**
**Contador**

5-PL07-006-B

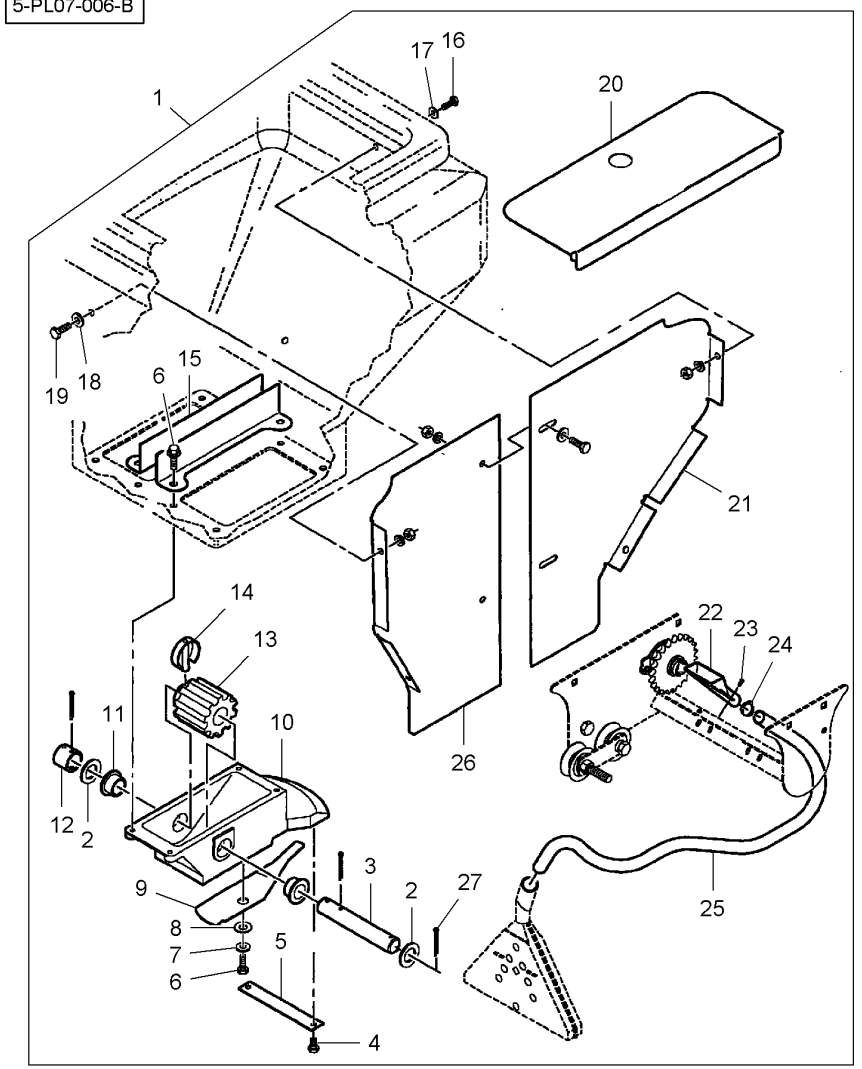


| | | | | | | | |
|---|---|---|---|---|---|---|---|
| 1 | 6000546 | | | **1** | KIT, ATTACHMENT | JEU ACCESSOIRES<br>KIT ACCESSORI | SATZ ANBAUTEILE<br>JUEGO ACCESORIO |
| 2 | 700717668 | 1 | | **4** | WASHER | RONDELLE<br>RONDELLA | SCHEIBE<br>ARANDELA |
| 3 | 853049 | 1 | | **2** | SHAFT | ARBRE<br>ALBERO | WELLE<br>ARBOL |
| 4 | 853792 | 1 | No 10 X 3/8 | **4** | SCREW | VIS<br>VITE | SCHRAUBE<br>TORNILLO |
| 5 | DA26006 | 1 | | **2** | SUPPORT | SUPPORT<br>SOPPORTO | TRAGER<br>SOPORTE |
| 6 | 701565 | 1 | 1/4"-20 X 3/4 | **10** | SCREW | VIS<br>VITE | SCHRAUBE<br>TORNILLO |
| 7 | 70921319 | 1 | | **2** | WASHER | RONDELLE<br>RONDELLA | SCHEIBE<br>ARANDELA |
| 8 | DB13845 | 1 | | **2** | SPRING WASHER | RONDELLE ELASTIQ<br>RONDELLA ELASTI. | FEDERSCHEIBE<br>ARANDELA ELASTI. |
| 9 | DA33403 | 1 | | **2** | PLATE | PLAQUE<br>PIASTRA | PLATTE<br>PLATO |
| 10 | 852975 | 1 | | **2** | HOUSING | CARTER<br>CARCASSA | GEHAEUSE<br>ALOJAMIENTO |
| 11 | DA25845 | 1 | | **4** | BEARING | COUSSINET<br>CUSCINETTO | LAGER<br>COJINETE |
| 12 | 854094 | 1 | | **2** | BUSH | BAGUE<br>BOCCOLA | RING<br>CASQUILLO |
| 13 | DAA22977 | 1 | | **2** | WHEEL | ROUE<br>RUOTA | RAD<br>RUEDA |
| 14 | DAB12703 | 1 | | **2** | PIN | GOUPILLE<br>COPPIGLIA | STIFT<br>PASADOR |
| 15 | 852736 | 1 | | **4** | SUPPORT | SUPPORT<br>SOPPORTO | TRAGER<br>SOPORTE |
| 16 | 700728082 | 1 | 1/4"-20 X 3/4 | **24** | SCREW | VIS<br>VITE | SCHRAUBE<br>TORNILLO |
| 17 | 700728084 | 1 | 1/4" | **24** | WASHER | RONDELLE<br>RONDELLA | SCHEIBE<br>ARANDELA |
| 18 | 700728085 | 1 | | **24** | SPRING WASHER | RONDELLE ELASTIQ<br>RONDELLA ELASTI. | FEDERSCHEIBE<br>ARANDELA ELASTI. |
| 19 | 700728083 | 1 | | **24** | WASHER | RONDELLE<br>RONDELLA | SCHEIBE<br>ARANDELA |
| 20 | 700158671 | 1 | | **2** | COVER | COUVERCLE<br>COPERCHIO | ABDECKUNG.<br>CUBIERTA |
| 21 | 700158336 | 1 | | **2** | DIVIDER | DIVISEUR<br>DIVISORE | ABTEILER<br>ASA DESVIADOR |
| 22 | DA37497 | 1 | | **2** | FUNNEL | ENTONNOIR<br>IMBUTO | TRICHTER<br>EMBUDO |
| 23 | N15180 | 1 | No 10-16 X 1/2 | **4** | SCREW | VIS<br>VITE | SCHRAUBE<br>TORNILLO |
| 24 | 70921910 | 1 | | **2** | HOSE CLIP | COLLIER DURITE<br>COLLARE DI TUBO | SCHLAUCHBINDER<br>ABRAZADERA TUBO |
| 25 | 852489 | 1 | | **2** | HOSE | DURITE<br>TUBO FLESSIBILE | SCHLAUCH<br>TUBO DE GOMA |
| 26 | 700158335 | 1 | | **2** | DIVIDER | DIVISEUR<br>DIVISORE | ABTEILER<br>ASA DESVIADOR |

| Hopper<br>Tremie<br>Korntank<br>Tramoggia<br>Tolva | 70-20 | Meter<br>Compteur<br>Zähler<br>Contatore<br>Contador |
|---|---|---|

5-PL07-006-B

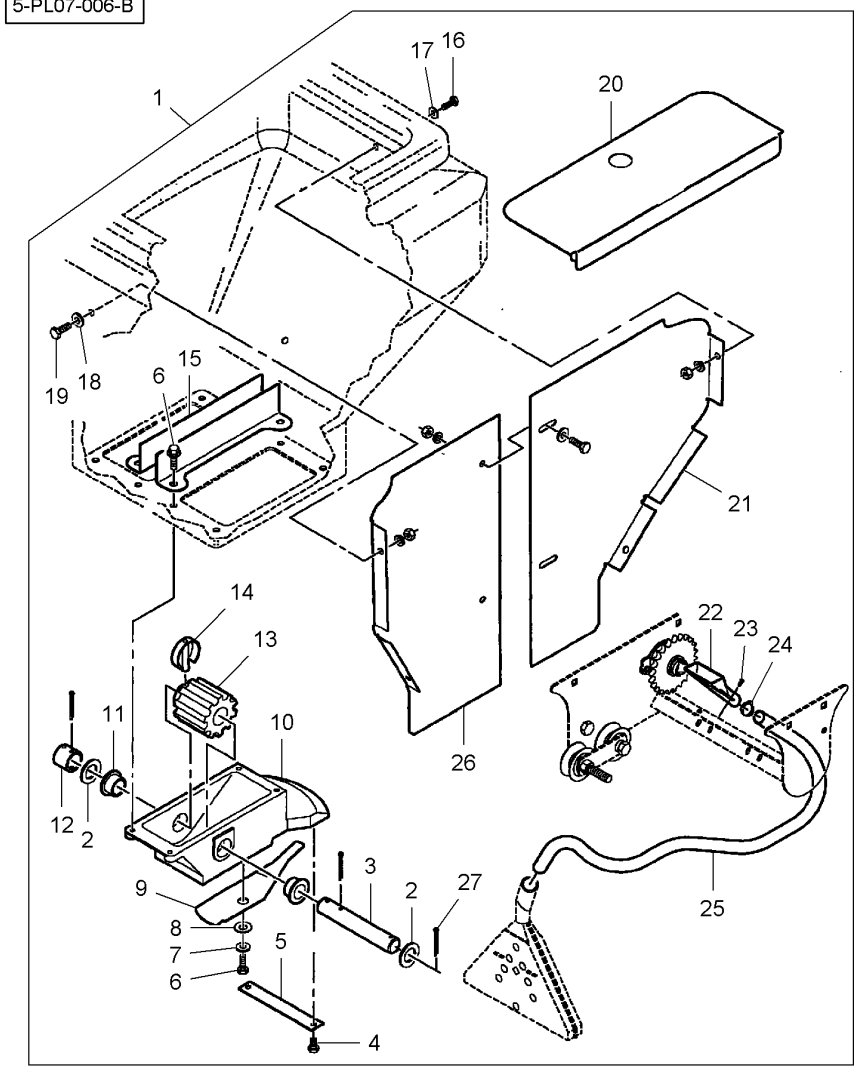


| | | | | | |
|---|---|---|---|---|---|
| 27 | 62190 | 5/32" X 1-1/2 | **6** PIN | GOUPILLE<br>COPPIGLIA | STIFT<br>PASADOR |

| | | | |
|---|---|---|---|
| **Hopper**<br>**Tremie**<br>**Korntank**<br>**Tramoggia**<br>**Tolva** | **Kit**<br>**Kit**<br>**Kit**<br>**Kit**<br>**Kit** | **70-25** | **Without Meter**<br>**Sans Compteur**<br>**Ohne Zähler**<br>**Senza Contatore**<br>**Sin Contador** |

5-PL23-001-B

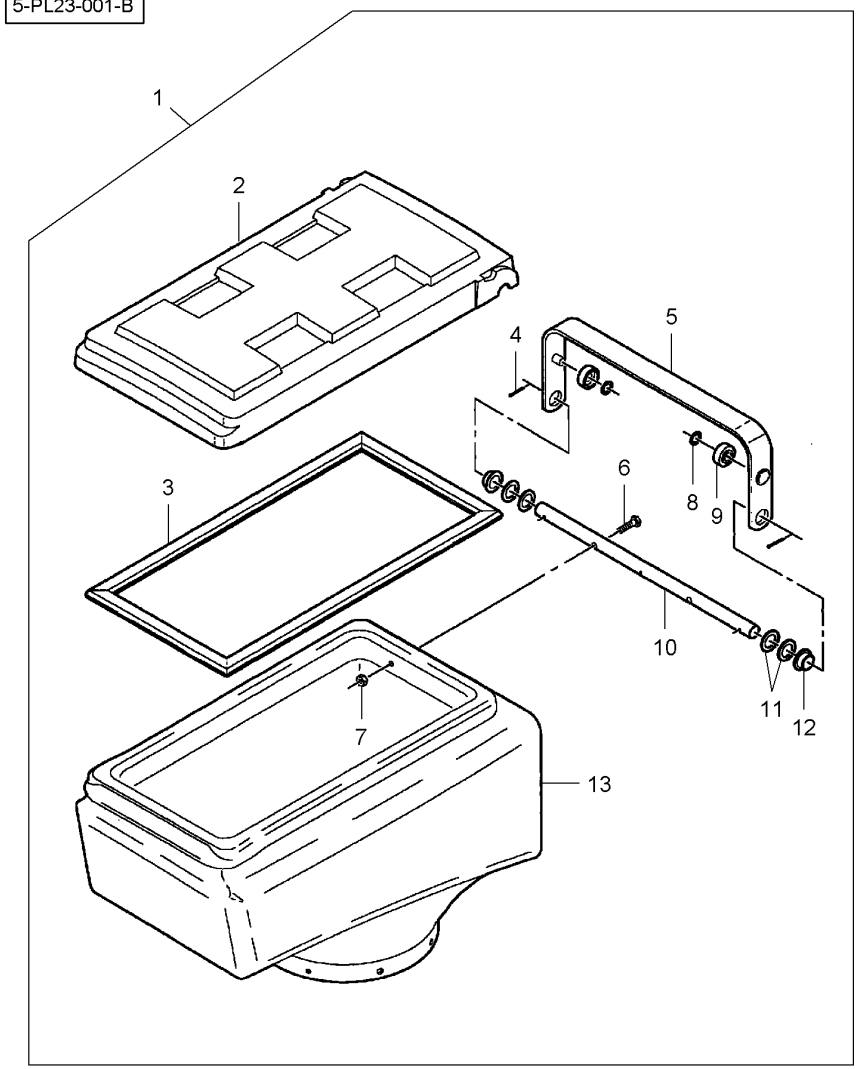


| | | | | | | | |
|---|---|---|---|---|---|---|---|
| 1 | 6000581 | | | **1** | KIT, ATTACHMENT | JEU ACCESSOIRES<br>KIT ACCESSORI | SATZ ANBAUTEILE<br>JUEGO ACCESORIO |
| 2* | 700724455 | 1 | | **1** | LID | PLAQUE COUVERCLE<br>COPERTA | ABDECKPLATTE<br>COBERTURA |
| 3 | 855041 | 2 | | **1** | SEAL | JOINT ETANCHEITE<br>GIUNTO ROTONDO | DICHTRING<br>JUNTA REDONDA |
| 4 | 70918452 | 1 | 1/8" X 1 | **2** | SPLIT PIN | GOUPILLE FENDUE<br>COPIGLIA | SPALTBOLZEN<br>PASADOR HENDIDO |
| 5 | 854805 | 1 | | **1** | GRIP | POIGNEE<br>MANIGLIA | HANDGRIFF<br>MANGO |
| 6 | 70950450 | 1 | M6 X 25 | **2** | CAPSCREW | VIS BOUCHON<br>TAPPO A VITE | HUTSCHRAUBE<br>TORNILLO TAPON |
| 7 | 7704703 | 1 | M6 | **2** | NUT | ECROU<br>DADO | MUTTER<br>TUERCA |
| 8 | **854808** | 1 | | **2** | SNAPRING | SEGMENT ARRET<br>ANELLO SIEGER | SPRENGRING<br>ANILLA RETENCION |
| 9 | **854806** | 1 | | **2** | ROLLER | GALET<br>ROTELLA | ROLLE<br>RODILLO |
| 10 | 854804 | 1 | | **1** | SHAFT | ARBRE<br>ALBERO | WELLE<br>ARBOL |
| 11 | **17813** | 1 | | **4** | WASHER | RONDELLE<br>RONDELLA | SCHEIBE<br>ARANDELA |
| 12 | **854807** | 1 | | **2** | BEARING FLANGE | FLASQUE ROULT<br>BEARING FLANGE | LAGERFLANSCH<br>BEARING FLANGE |
| 13 | N858926 | 1 | | **1** | HOPPER | TREMIE<br>TRAMOGGIA | KORNTANK<br>TOLVA |

| | | | |
|---|---|---|---|
| **Hopper** | **Kit** | **70-30** | **Without Meter** |
| **Tremie** | **Kit** | | **Sans Compteur** |
| **Korntank** | **Kit** | | **Ohne Zähler** |
| **Tramoggia** | **Kit** | | **Senza Contatore** |
| **Tolva** | **Kit** | | **Sin Contador** |

5-PL23-004-A

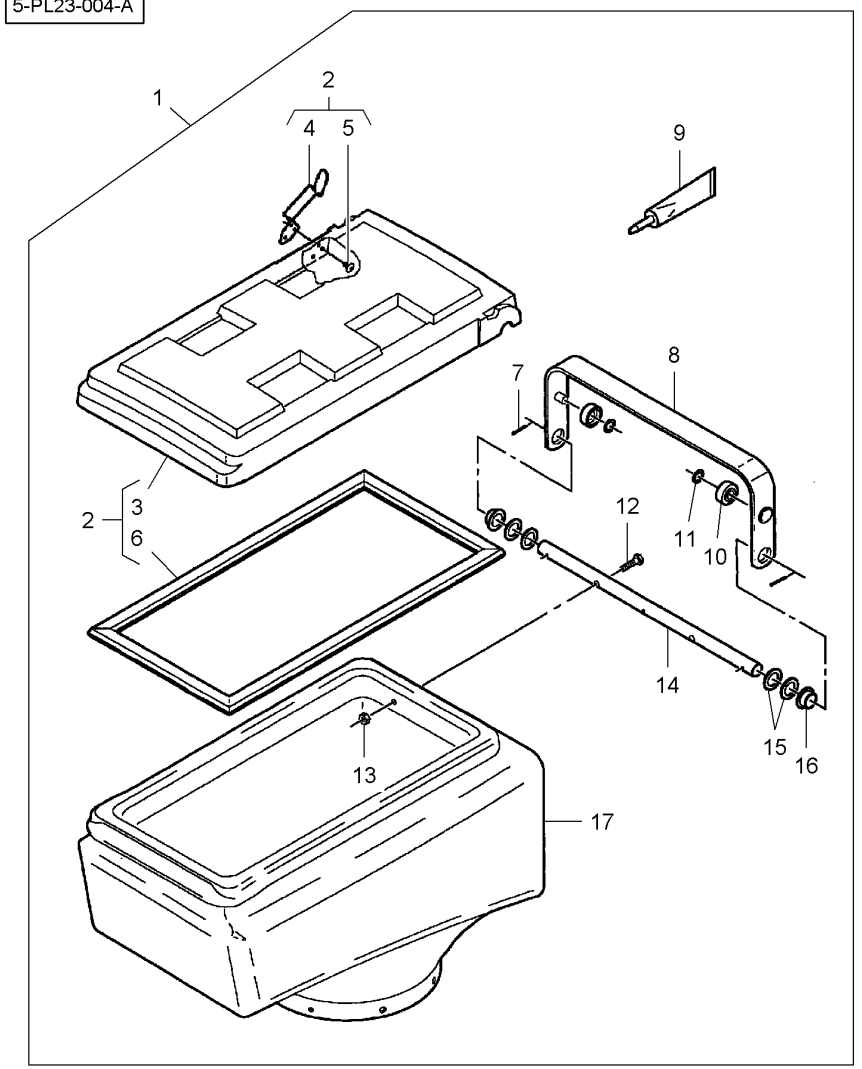


| | | | | | | |
|---|---|---|---|---|---|---|
| 1* | 6000753 | | **1** | KIT, ATTACHING. | KIT ACCESSOIRE<br>KIT ATTACCO | ANBAUSATZ<br>JGO.DE FIJACION |
| 2* | 700724455 | 1 | **1** | LID | PLAQUE COUVERCLE<br>COPERTA | ABDECKPLATTE<br>COBERTURA |
| 3* | 854700 | 2 | **1** | LID | PLAQUE COUVERCLE<br>COPERTA | ABDECKPLATTE<br>COBERTURA |
| 4* | 700724453 | 2 | **1** | LATCH | VERROU<br>DENTE DI ARRESTO | KLINKE<br>TOPE |
| 5* | 70937253 | 2 | **3** | RIVET | RIVET<br>RIVETTO | NIET<br>REMACHE |
| 6* | 855041 | 2 | **1** | SEAL | JOINT ETANCHEITE<br>GIUNTO ROTONDO | DICHTRING<br>JUNTA REDONDA |
| 7* | 62083 | 1 1/8" X 1 | **2** | SPLIT PIN | GOUPILLE FENDUE<br>COPIGLIA | SPALTBOLZEN<br>PASADOR HENDIDO |
| 8* | 854805 | 1 | **1** | GRIP | POIGNEE<br>MANIGLIA | HANDGRIFF<br>MANGO |
| 9* | **79014636** | 1 | **1** | SEALING COMPOUND | PRODUIT ETANCH<br>INSIEME TENUTE | DICHTUNGSMITTEL<br>PASTA PARA JUNTA |
| 10* | **854806** | 1 | **2** | ROLLER | GALET<br>ROTELLA | ROLLE<br>RODILLO |
| 11* | **854808** | 1 | **2** | SNAPRING | SEGMENT ARRET<br>ANELLO SIEGER | SPRENGRING<br>ANILLA RETENCION |
| 12* | 7772163 | 1 M6 X 25 | **2** | CAPSCREW | VIS BOUCHON<br>TAPPO A VITE | HUTSCHRAUBE<br>TORNILLO TAPON |
| 13* | 7704703 | 1 M6 | **2** | NUT | ECROU<br>DADO | MUTTER<br>TUERCA |
| 14* | 854804 | 1 | **1** | SHAFT | ARBRE<br>ALBERO | WELLE<br>ARBOL |
| 15* | **17813** | 1 | **4** | WASHER | RONDELLE<br>RONDELLA | SCHEIBE<br>ARANDELA |
| 16* | **854807** | 1 | **2** | BEARING FLANGE | FLASQUE ROULT<br>BEARING FLANGE | LAGERFLANSCH<br>BEARING FLANGE |
| 17* | N858926 | 1 | **1** | HOPPER | TREMIE<br>TRAMOGGIA | KORNTANK<br>TOLVA |

| | | | |
|---|---|---|---|
| **Hopper** | **Kit** | **70-35** | **Without Meter** |
| **Tremie** | **Kit** | | **Sans Compteur** |
| **Korntank** | **Kit** | | **Ohne Zähler** |
| **Tramoggia** | **Kit** | | **Senza Contatore** |
| **Tolva** | **Kit** | | **Sin Contador** |

5-PL23-002-B

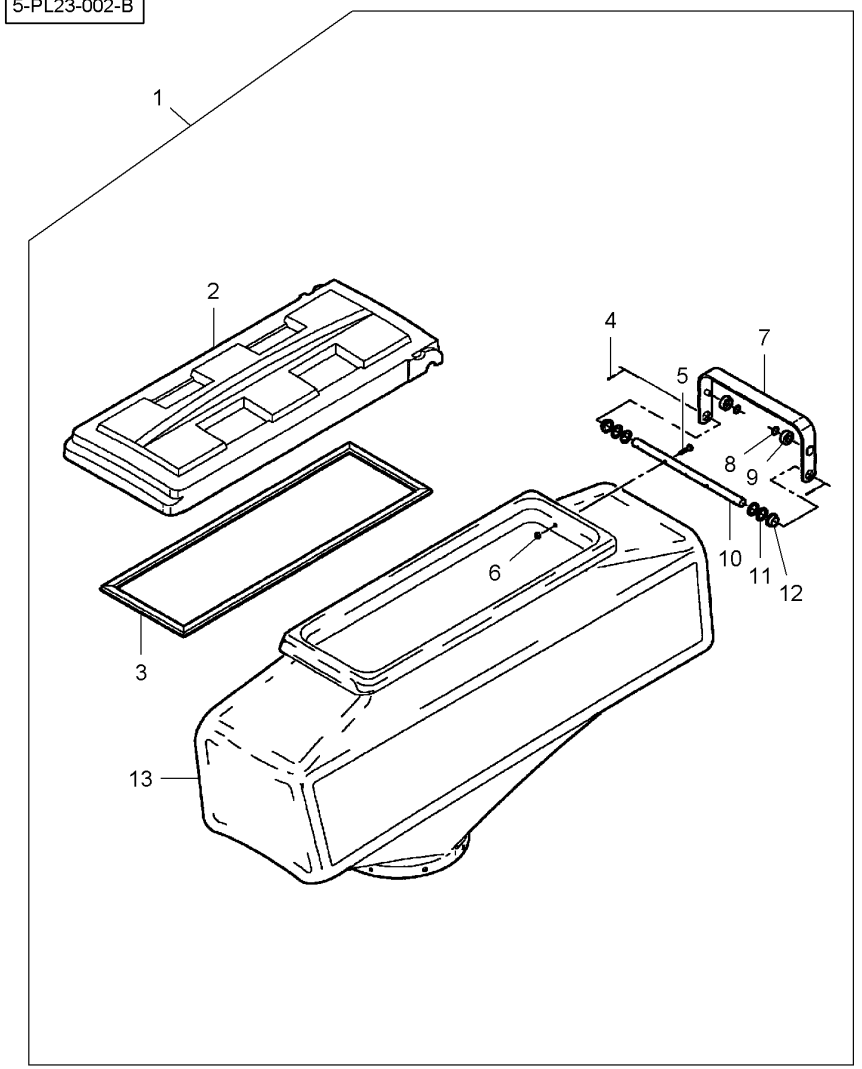


| | | | | | | |
|---|---|---|---|---|---|---|
| 1 | 6000582 | | | **1** | KIT, ATTACHMENT | JEU ACCESSOIRES<br>KIT ACCESSORI |
| 2 | 700156352 | 1 | | **1** | LID | PLAQUE COUVERCLE<br>COPERTA |
| 3 | 700156351 | 2 | | **1** | GASKET | JOINT<br>GIUNTO PIANO |
| 4 | 70918452 | 1 | 1/8" X 1 | **2** | SPLIT PIN | GOUPILLE FENDUE<br>COPIGLIA |
| 5 | 70950450 | 1 | M6 X 25 | **2** | CAPSCREW | VIS BOUCHON<br>TAPPO A VITE |
| 6 | 7704703 | 1 | M6 | **2** | NUT | ECROU<br>DADO |
| 7 | 700156408 | 1 | | **1** | GRIP | POIGNEE<br>MANIGLIA |
| 8 | **854806** | 1 | | **2** | ROLLER | GALET<br>ROTELLA |
| 9 | **854808** | 1 | | **2** | SNAPRING | SEGMENT ARRET<br>ANELLO SIEGER |
| 10 | 700156409 | 1 | | **1** | SHAFT | ARBRE<br>ALBERO |
| 11 | **17813** | 1 | | **4** | WASHER | RONDELLE<br>RONDELLA |
| 12 | **854807** | 1 | | **2** | BEARING FLANGE | FLASQUE ROULT<br>BEARING FLANGE |
| 13 | N858971 | 1 | | **1** | HOPPER | TREMIE<br>TRAMOGGIA |

SATZ ANBAUTEILE
JUEGO ACCESORIO
ABDECKPLATTE
COBERTURA
FLACHDICHTUNG
JUNTA PLANA
SPALTBOLZEN
PASADOR HENDIDO
HUTSCHRAUBE
TORNILLO TAPON
MUTTER
TUERCA
HANDGRIFF
MANGO
ROLLE
RODILLO
SPRENGRING
ANILLA RETENCION
WELLE
ARBOL
SCHEIBE
ARANDELA
LAGERFLANSCH
BEARING FLANGE
KORNTANK
TOLVA

| | | | |
|---|---|---|---|
| **Hopper**<br>**Tremie**<br>**Korntank**<br>**Tramoggia**<br>**Tolva** | **Kit**<br>**Kit**<br>**Kit**<br>**Kit**<br>**Kit** | **70-40** | **Without Meter**<br>**Sans Compteur**<br>**Ohne Zähler**<br>**Senza Contatore**<br>**Sin Contador** |

5-PL23-003-A

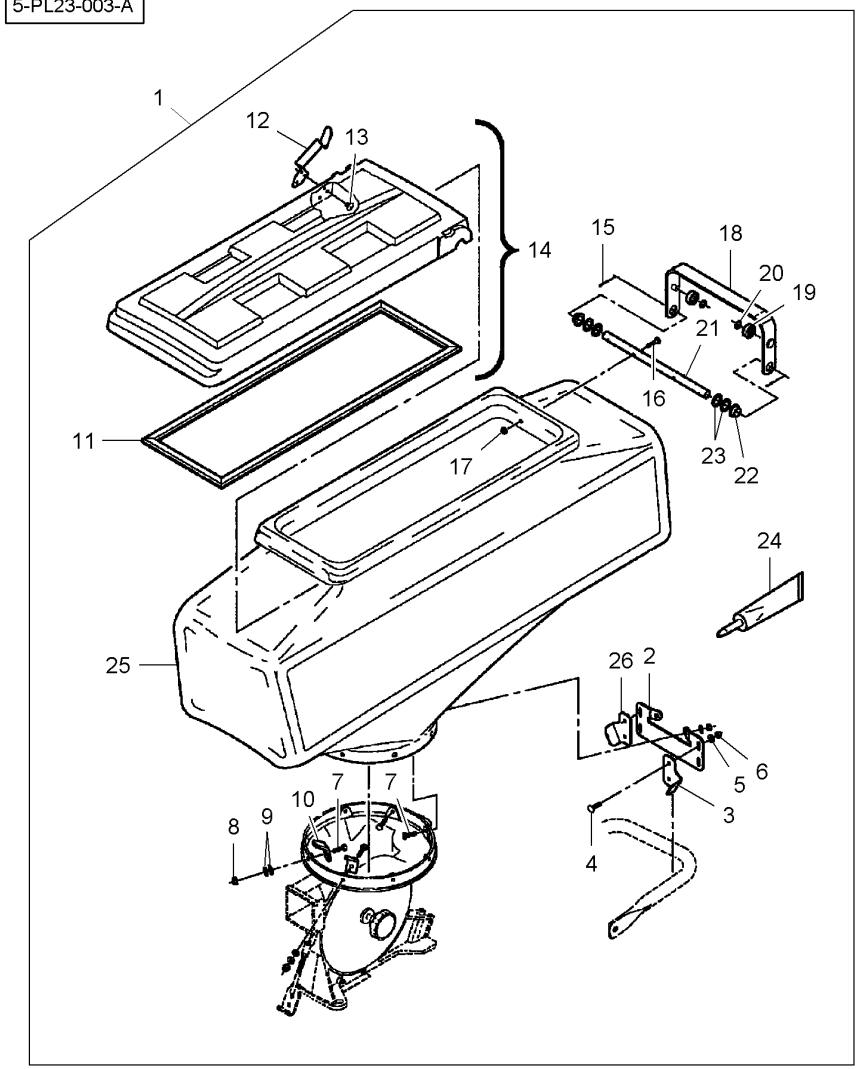


| | | | | | | | |
|---|---|---|---|---|---|---|---|
| 1* | 6000754 | | | **1** | KIT, ATTACHMENT | JEU ACCESSOIRES<br>KIT ACCESSORI | SATZ ANBAUTEILE<br>JUEGO ACCESORIO |
| 2* | 700160190 | 1 | | **1** | PLATE | PLAQUE<br>PIASTRA | PLATTE<br>PLATO |
| 3* | 700160191 | 1 ◀ | | **1** | SUPPORT | SUPPORT<br>SOPPORTO | TRAGER<br>SOPORTE |
| 4* | 7700602 | 1 | M6 X 25 | **4** | BOLT | BOULON<br>BULLONE | BOLZEN<br>BULON |
| 5* | 705707 | 1 | 1/4" | **6** | WASHER | RONDELLE<br>RONDELLA | SCHEIBE<br>ARANDELA |
| 6* | 70950984 | 1 | M6 | **6** | LOCKNUT | ECROU FREIN<br>AUTOBLOCCANTE | SICHERUNGSMUTTER<br>CONTRATUERCA |
| 7* | 700721443 | 1 | M6 X 35 | **4** | CAPSCREW | VIS BOUCHON<br>TAPPO A VITE | HUTSCHRAUBE<br>TORNILLO TAPON |
| 8* | 700716694 | 1 | M6 | **2** | LOCKNUT | ECROU FREIN<br>AUTOBLOCCANTE | SICHERUNGSMUTTER<br>CONTRATUERCA |
| 9* | **700720580** | 1 | | **16** | SPRING WASHER | RONDELLE ELASTIQ<br>RONDELLA ELASTI. | FEDERSCHEIBE<br>ARANDELA ELASTI. |
| 10* | 700159809 | 1 | | **2** | CLIP | PATTE D'ATTACHE<br>FERMAGLIO | SCHELLE<br>CLIP |
| 11* | 700156351 | 1 | | **1** | GASKET | JOINT<br>GIUNTO PIANO | FLACHDICHTUNG<br>JUNTA PLANA |
| 12* | 700724453 | 1 | | **1** | LATCH | VERROU<br>DENTE DI ARRESTO | KLINKE<br>TOPE |
| 13* | 70937253 | 1 | | **3** | RIVET | RIVET<br>RIVETTO | NIET<br>REMACHE |
| 14* | 700724456 | 1 | | **1** | LID | PLAQUE COUVERCLE<br>COPERTA | ABDECKPLATTE<br>COBERTURA |
| 15* | 62083 | 1 | 1/8" X 1 | **2** | SPLIT PIN | GOUPILLE FENDUE<br>COPIGLIA | SPALTBOLZEN<br>PASADOR HENDIDO |
| 16* | 7772163 | 1 | M6 X 25 | **2** | CAPSCREW | VIS BOUCHON<br>TAPPO A VITE | HUTSCHRAUBE<br>TORNILLO TAPON |
| 17* | 7704703 | 1 | M6 | **2** | NUT | ECROU<br>DADO | MUTTER<br>TUERCA |
| 18* | 700156408 | 1 | | **1** | GRIP | POIGNEE<br>MANIGLIA | HANDGRIFF<br>MANGO |
| 19* | **854806** | 1 | | **2** | ROLLER | GALET<br>ROTELLA | ROLLE<br>RODILLO |
| 20* | **854808** | 1 | | **2** | SNAPRING | SEGMENT ARRET<br>ANELLO SIEGER | SPRENGRING<br>ANILLA RETENCION |
| 21* | 700156409 | 1 | | **1** | SHAFT | ARBRE<br>ALBERO | WELLE<br>ARBOL |
| 22* | **854807** | 1 | | **2** | BEARING FLANGE | FLASQUE ROULT<br>BEARING FLANGE | LAGERFLANSCH<br>BEARING FLANGE |
| 23* | **17813** | 1 | | **4** | WASHER | RONDELLE<br>RONDELLA | SCHEIBE<br>ARANDELA |
| 24* | **79014636** | 1 | | **1** | SEALING COMPOUND | PRODUIT ETANCH<br>INSIEME TENUTE | DICHTUNGSMITTEL<br>PASTA PARA JUNTA |
| 25* | N858971 | 1 | | **1** | HOPPER | TREMIE<br>TRAMOGGIA | KORNTANK<br>TOLVA |
| 26* | 700160193 | 1 | | **1** | SUPPORT | SUPPORT<br>SOPPORTO | TRAGER<br>SOPORTE |

**Seed Meter**
**Doseur De Graines**
**Saatgutdosierer**
**Dosatore Di Sementi**
**Dosificador De Grano**

**70-45**

5-PM16-001-A

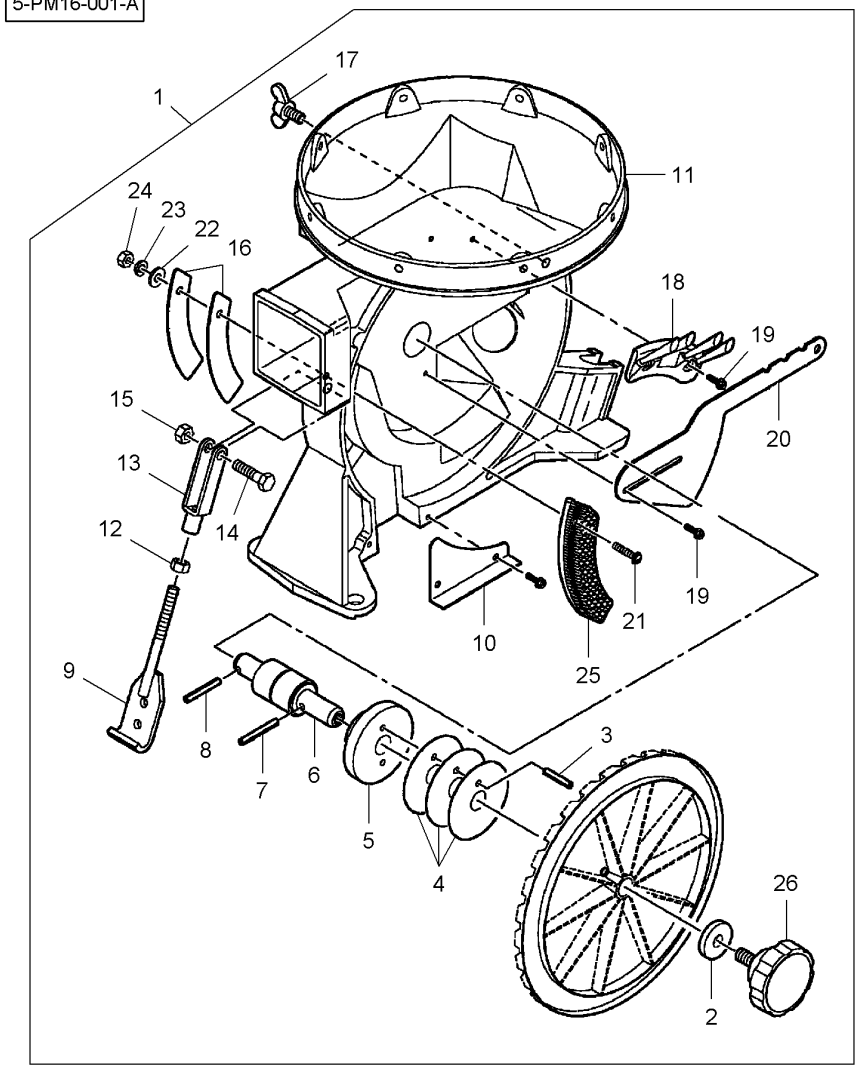


| | | | | | | |
|---|---|---|---|---|---|---|
| 1* | 6000589 | | 1 | KIT, ATTACHMENT | JEU ACCESSOIRES<br>KIT ACCESSORI | SATZ ANBAUTEILE<br>JUEGO ACCESORIO |
| 2* | W248051B | 1 | 1 | WASHER | RONDELLE<br>RONDELLA | SCHEIBE<br>ARANDELA |
| 3* | N856868 | 1 3/16" X 1 | 1 | ROLL PIN | GOUPILLE ROULEE<br>SPINA ELASTICA | SPANNHUELSE<br>PASADOR ELASTICO |
| 4* | **852868** | 1 | 3 | SHIM | CALE REGLAGE<br>SPESSORE | AUSGLEICHSCHEIBE<br>CALCE |
| 5* | **852295** | 1 | 1 | HUB | MOYEU<br>MOZZO | NABE<br>CUBO |
| 6* | **N852996** | 1 | 1 | SHAFT | ARBRE<br>ALBERO | WELLE<br>ARBOL |
| 7* | N856869 | 1 3/16" X 1-1/2 | 1 | ROLL PIN | GOUPILLE ROULEE<br>SPINA ELASTICA | SPANNHUELSE<br>PASADOR ELASTICO |
| 8* | 700725287 | 1 3/16" X 1-1/4 | 1 | ROLL PIN | GOUPILLE ROULEE<br>SPINA ELASTICA | SPANNHUELSE<br>PASADOR ELASTICO |
| 9* | 853613 | 1 | 1 | HOOK | CROCHET<br>GANCIO | HAKEN<br>GANCHO |
| 10* | N858766 | 1 | 1 | COVER | COUVERCLE<br>COPERCHIO | ABDECKUNG.<br>CUBIERTA |
| 11* | N858770 | 1 | 1 | METER | COMPTEUR<br>METRO | MESSINSTRUMENT<br>MEDIDOR |
| 12* | 704429 | 1 5/16"-24 | 1 | NUT UNF | ECROU UNF<br>DADO UNF | MUTTER UNF<br>TUERCA UNF |
| 13* | U66498 | 1 | 1 | CLEVIS | CHAPE<br>GANCIO D'ATTACCO | GABELSTUECK<br>GANCHO SEGURI. |
| 14* | 7771546 | 1 M8 X 30 | 1 | SCREW | VIS<br>VITE | SCHRAUBE<br>TORNILLO |
| 15* | PZND2091V | 1 M8 | 1 | LOCKNUT | ECROU FREIN<br>AUTOBLOCCANTE | SICHERUNGSMUTTER<br>CONTRATUERCA |
| 16* | N858772 | 1 | 2 | SHIM | CALE REGLAGE<br>SPESSORE | AUSGLEICHSCHEIBE<br>CALCE |
| 17* | 339107X1 | 1 M8 X 16 | 1 | WINGBOLT | VIS A AILETTES<br>BULLONE ALETTATO | FLUEGELSCHRAUBE<br>PERNO DE ALETAS |
| 18* | **W247713B** | 1 | 1 | BRUSH | BALAI<br>SPAZZOLA | BUERSTE<br>ESCOBILLA |
| 19* | 3019030X1 | 1 M4 X 12 | 5 | SCREW | VIS<br>VITE | SCHRAUBE<br>TORNILLO |
| 20* | W247712B | 1 | 1 | LEVER | LEVIER<br>LEVA | HEBEL<br>PALANCA |
| 21* | 392415X1 | 1 M5 X 25 | 1 | SCREW | VIS<br>VITE | SCHRAUBE<br>TORNILLO |
| 22* | 70917380 | 1 No 10 | 1 | WASHER | RONDELLE<br>RONDELLA | SCHEIBE<br>ARANDELA |
| 23* | 1102796 | 1 M5 | 1 | WASHER | RONDELLE<br>RONDELLA | SCHEIBE<br>ARANDELA |
| 24* | 7774078 | 1 M5 | 1 | NUT | ECROU<br>DADO | MUTTER<br>TUERCA |
| 25* | **N858771** | 1 | 1 | BRUSH | BALAI<br>SPAZZOLA | BUERSTE<br>ESCOBILLA |
| 25* | 700156474 | 1 [A] | 1 | BRUSH | BALAI<br>SPAZZOLA | BUERSTE<br>ESCOBILLA |

**Seed Meter**
**Doseur De Graines**
**Saatgutdosierer**
**Dosatore Di Sementi**
**Dosificador De Grano**

**70-45**

5-PM16-001-A

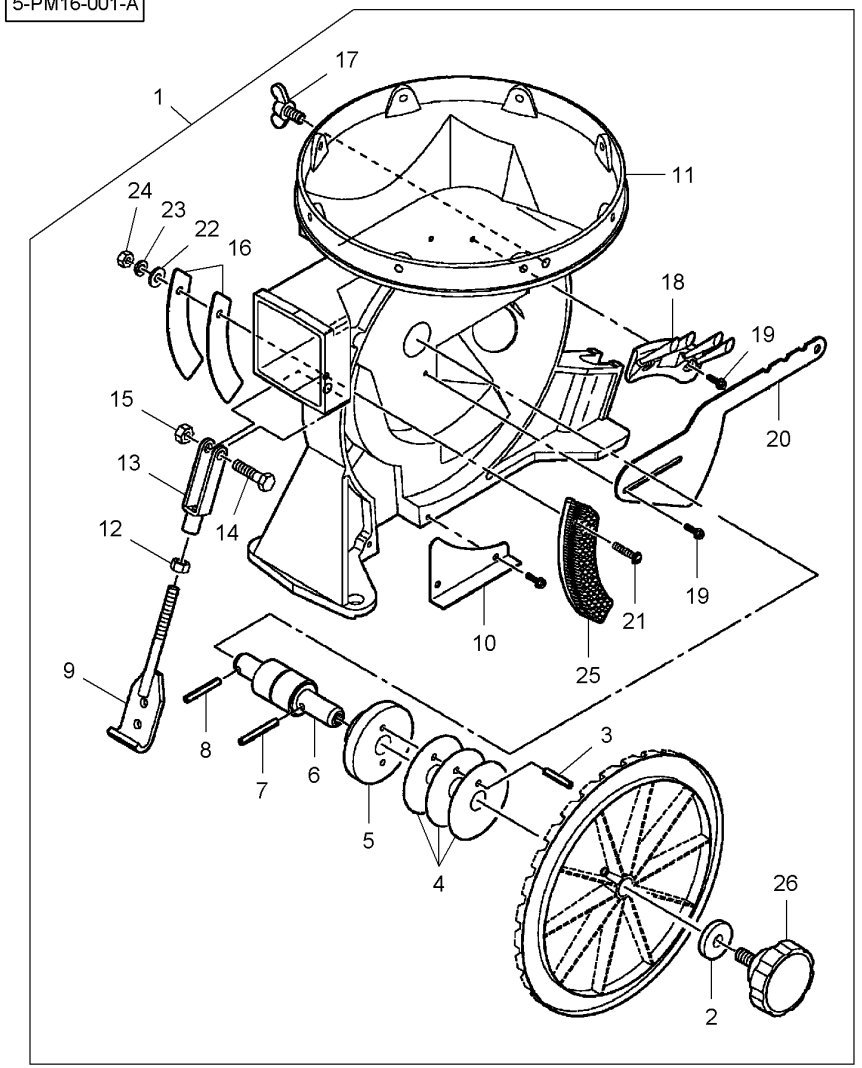


| | | | | | |
|---|---|---|---|---|---|
| 26* | **N858839** | 1 | **1** KNOB | POMMEAU<br>POMELO | KNOPF<br>POMO |

[A] SUGAR BEET
BETTERAVE A SUCRE
ZUCKERRUBE
BARBABIETOLA DA ZUCCHERO
REMOLACHA AZUCARERA

**Seed Meter**
**Doseur De Graines**
**Saatgutdosierer**
**Dosatore Di Sementi**
**Dosificador De Grano**

**70-50**

**Funnel Flow**
**Entonnoir D'Ecoulement**
**Trichterförmiger Auslauf**
**Vortice Di Scarico**
**Remolino De Descarga**

5-PM16-002-A

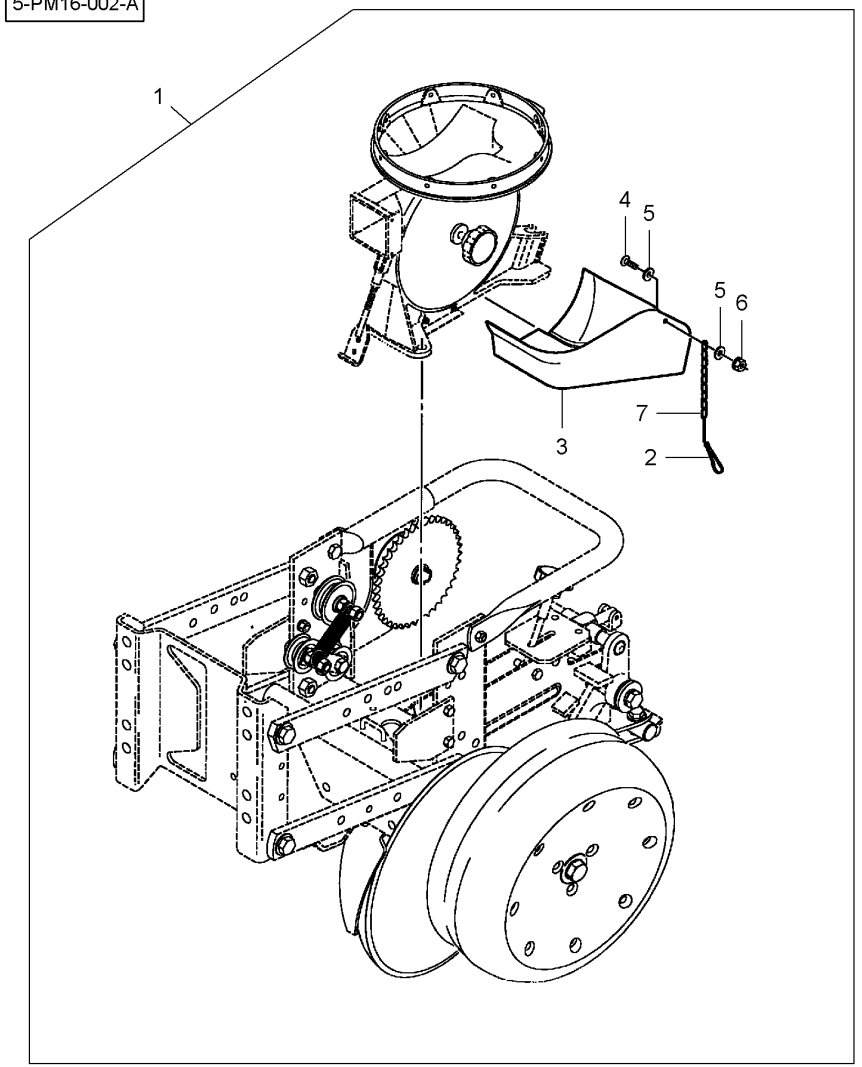


| | | | | | |
|---|---|---|---|---|---|
| 1* | 6000628 | | **1** | KIT, ATTACHMENT | JEU ACCESSOIRES<br>KIT ACCESSORI<br>SATZ ANBAUTEILE<br>JUEGO ACCESORIO |
| 2* | 700721038 | 1 | **1** | SPRING | RESSORT<br>MOLLA<br>FEDER<br>MUELLE |
| 3* | 700721059 | 1 | **1** | FUNNEL | ENTONNOIR<br>IMBUTO<br>TRICHTER<br>EMBUDO |
| 4* | 700700628 | 1 No 10-24 X 1/2 | **1** | SCREW UNC | VIS UNC<br>VITE UNC<br>SCHRAUBE UNC<br>TORNILLO UNC |
| 5* | 70917380 | 1 No 10 | **2** | WASHER | RONDELLE<br>RONDELLA<br>SCHEIBE<br>ARANDELA |
| 6* | 700716697 | 1 No 10-24 | **1** | LOCKNUT | ECROU FREIN<br>AUTOBLOCCANTE<br>SICHERUNGSMUTTER<br>CONTRATUERCA |
| 7* | 700721379 | 1 | **1** | CHAIN | CHAINE<br>CATENA<br>KETTE<br>CADENA |

**Seed Disc**
**Disque Pour Graines**
**Scheibe Für Samen**
**Disco Per Sementi**
**Disco Para Grano**

**70-55**

5-PM17-001-A

| ITEM No | CELLS No | CELL VIEW | USAGE |
|---|---|---|---|
| 1 | 30 | | FIELD CORN - MEDIUM<br>SUNFLOWER - LARGE |
| 2 | 30 | | FIELD CORN - LARGE |
| 3 | 30 | | FIELD CORN - SMALL |
| 4 | 30 | | POPCORN<br>FIELD CORN - SMALL<br>SUGAR BEETS - SMALL PELL.<br>SUNFLOWER - SMALL TO MEDIUM |
| 5 | 60 | | SOYBEANS (2 SEEDS PER CELL)<br>NAVY BEANS - LARGE |
| 6 | 60 | | SMALL SOYBEANS (2 SEEDS PER CELL)<br>3000 TO 4500 SEEDS PER POUND |
| 7 | 60 | | SOYBEAN (1 SEED PER CELL) |
| 8 | 50 | | LARGE EDIBLE BEAN<br>PINTO - CRANBERRY<br>RED KIDNEY<br>BABY LIMA |
| 9 | 30 | | SORGHUM, MILO - MAIZE<br>SUGAR BEETS - ALL SIZES<br>SEGMENTED No 4 OR 5 PREFERRED |
| 10 | 120 | | SORGHUM<br>MILO |
| 11 | 60 | | COTTON (REMOVE TICKLER BRUSH)<br>SUGAR BEETS - LARGE PELL. |
| 12 | 60 | | SNAP BEAN |
| 13 | 40 | | PEANUT , RUNNER |
| 14 | 38 | | PEANUT , VIRGINIA |
| 15 | 60 | | SUGAR BEETS |
| 16 | 20 | | HILL DROP COTTON |
| 17 | 60 | | WHEAT (8 SEEDS PER CELL) |
| 18 | 60 | | SUGARBEET (5M) |
| 19 | 60 | | SUGARBEET (4M)<br>MILO |
| 20 | 120 | | NATO BEAN |
| 21 | 30 | | VERY SMALL CORN<br>3200 TO 4500 SEEDS PER ROUND |
| 22 | - | - | BLANK DISC |

| | | | | | |
|---|---|---|---|---|---|
| 1* | 6100023 | | X KIT, DISC | JEU DISQUE KIT, DISC | LAMELLENPAKET KIT, DISC |
| 1* | 852435 | 1 | 2 DISC | DISQUE DISCO | SCHEIBE DISCO |
| 2* | 6100024 | | X KIT, DISC | JEU DISQUE KIT, DISC | LAMELLENPAKET KIT, DISC |
| 2* | 852434 | 2 | 2 DISC | DISQUE DISCO | SCHEIBE DISCO |
| 3* | 6100032 | | X KIT, DISC | JEU DISQUE KIT, DISC | LAMELLENPAKET KIT, DISC |
| 3* | 852436 | 3 | 2 DISC | DISQUE DISCO | SCHEIBE DISCO |
| 4* | 6100027 | | X KIT, DISC | JEU DISQUE KIT, DISC | LAMELLENPAKET KIT, DISC |
| 4* | 852437 | 4 | 2 DISC | DISQUE DISCO | SCHEIBE DISCO |
| 5* | 6100025 | | X KIT, DISC | JEU DISQUE KIT, DISC | LAMELLENPAKET KIT, DISC |
| 5* | 852432 | 5 | 2 DISC | DISQUE DISCO | SCHEIBE DISCO |
| 6* | 6000698 | | X KIT, DISC | JEU DISQUE KIT, DISC | LAMELLENPAKET KIT, DISC |
| 6* | 700722513 | 6 | 2 DISC | DISQUE DISCO | SCHEIBE DISCO |
| 7* | 6100026 | | X KIT, DISC | JEU DISQUE KIT, DISC | LAMELLENPAKET KIT, DISC |
| 7* | 852433 | 7 | 2 DISC | DISQUE DISCO | SCHEIBE DISCO |
| 8* | 6100031 | | X KIT, DISC | JEU DISQUE KIT, DISC | LAMELLENPAKET KIT, DISC |
| 8* | 852441 | 8 | 2 DISC | DISQUE DISCO | SCHEIBE DISCO |
| 9* | 6100030 | | X KIT, DISC | JEU DISQUE KIT, DISC | LAMELLENPAKET KIT, DISC |
| 9* | 852439 | 9 | 2 DISC | DISQUE DISCO | SCHEIBE DISCO |
| 10* | 6100029 | | X KIT, DISC | JEU DISQUE KIT, DISC | LAMELLENPAKET KIT, DISC |
| 10* | 852440 | 10 | 2 DISC | DISQUE DISCO | SCHEIBE DISCO |
| 11* | 6100028 | | X KIT, DISC | JEU DISQUE KIT, DISC | LAMELLENPAKET KIT, DISC |
| 11* | 852438 | 11 | 2 DISC | DISQUE DISCO | SCHEIBE DISCO |
| 12* | 6100106 | | X KIT, DISC | JEU DISQUE KIT, DISC | LAMELLENPAKET KIT, DISC |
| 12* | 854048 | 12 | 2 DISC | DISQUE DISCO | SCHEIBE DISCO |
| 13* | 6100107 | | X KIT, DISC | JEU DISQUE KIT, DISC | LAMELLENPAKET KIT, DISC |
| 13* | 854082 | 13 | 2 DISC | DISQUE DISCO | SCHEIBE DISCO |

**Seed Disc**
**Disque Pour Graines**
**Scheibe Für Samen**
**Disco Per Sementi**
**Disco Para Grano**

**70-55**

5-PM17-001-A

| ITEM No | CELLS No | CELL VIEW | USAGE |
|---|---|---|---|
| 1 | 30 | | FIELD CORN - MEDIUM<br>SUNFLOWER - LARGE |
| 2 | 30 | | FIELD CORN - LARGE |
| 3 | 30 | | FIELD CORN - SMALL |
| 4 | 30 | | POPCORN<br>FIELD CORN - SMALL<br>SUGAR BEETS - SMALL PELL.<br>SUNFLOWER - SMALL TO MEDIUM |
| 5 | 60 | | SOYBEANS (2 SEEDS PER CELL)<br>NAVY BEANS - LARGE |
| 6 | 60 | | SMALL SOYBEANS (2 SEEDS PER CELL)<br>3000 TO 4500 SEEDS PER POUND |
| 7 | 60 | | SOYBEAN (1 SEED PER CELL) |
| 8 | 50 | | LARGE EDIBLE BEAN<br>PINTO - CRANBERRY<br>RED KIDNEY<br>BABY LIMA |
| 9 | 30 | | SORGHUM, MILO - MAIZE<br>SUGAR BEETS - ALL SIZES<br>SEGMENTED No 4 OR 5 PREFERRED |
| 10 | 120 | | SORGHUM<br>MILO |
| 11 | 60 | | COTTON (REMOVE TICKLER BRUSH)<br>SUGAR BEETS - LARGE PELL. |
| 12 | 60 | | SNAP BEAN |
| 13 | 40 | | PEANUT , RUNNER |
| 14 | 38 | | PEANUT , VIRGINIA |
| 15 | 60 | | SUGAR BEETS |
| 16 | 20 | | HILL DROP COTTON |
| 17 | 60 | | WHEAT (8 SEEDS PER CELL) |
| 18 | 60 | | SUGARBEET (5M) |
| 19 | 60 | | SUGARBEET (4M)<br>MILO |
| 20 | 120 | | NATO BEAN |
| 21 | 30 | | VERY SMALL CORN<br>3200 TO 4500 SEEDS PER ROUND |
| 22 | - | - | BLANK DISC |

| | | | | | |
|---|---|---|---|---|---|
| 14* | 6100108 | | X KIT, DISC | JEU DISQUE<br>KIT, DISC | LAMELLENPAKET<br>KIT, DISC |
| 14* | 854049 | 14 | 2 DISC | DISQUE<br>DISCO | SCHEIBE<br>DISCO |
| 15* | 6100129 | | X KIT, DISC | JEU DISQUE<br>KIT, DISC | LAMELLENPAKET<br>KIT, DISC |
| 15* | 854047 | 15 | 2 DISC | DISQUE<br>DISCO | SCHEIBE<br>DISCO |
| 16* | 6100130 | | X KIT, DISC | JEU DISQUE<br>KIT, DISC | LAMELLENPAKET<br>KIT, DISC |
| 16* | 854486 | 16 | 2 DISC | DISQUE<br>DISCO | SCHEIBE<br>DISCO |
| 17* | 6100222 | | X KIT, DISC | JEU DISQUE<br>KIT, DISC | LAMELLENPAKET<br>KIT, DISC |
| 17* | 854754 | 17 | 2 DISC | DISQUE<br>DISCO | SCHEIBE<br>DISCO |
| 18* | 6100254 | | X KIT, DISC | JEU DISQUE<br>KIT, DISC | LAMELLENPAKET<br>KIT, DISC |
| 18* | N856067 | 18 | 2 DISC | DISQUE<br>DISCO | SCHEIBE<br>DISCO |
| 19* | 6100358 | | X KIT, DISC | JEU DISQUE<br>KIT, DISC | LAMELLENPAKET<br>KIT, DISC |
| 19* | N857115 | 19 | 2 DISC | DISQUE<br>DISCO | SCHEIBE<br>DISCO |
| 20* | 6100253 | | X KIT, DISC | JEU DISQUE<br>KIT, DISC | LAMELLENPAKET<br>KIT, DISC |
| 20* | 854960 | 20 | 2 DISC | DISQUE<br>DISCO | SCHEIBE<br>DISCO |
| 21* | 6000709 | | X KIT, DISC | JEU DISQUE<br>KIT, DISC | LAMELLENPAKET<br>KIT, DISC |
| 21* | 700722998 | 21 | 2 DISC | DISQUE<br>DISCO | SCHEIBE<br>DISCO |
| 22* | 6100229 | | X KIT, DISC | JEU DISQUE<br>KIT, DISC | LAMELLENPAKET<br>KIT, DISC |
| 22* | N855794 | 22 | 2 DISC | DISQUE<br>DISCO | SCHEIBE<br>DISCO |

80

**Gate**
**Berceau**
**Bodenklappe**
**Piastrina Di Chiusura**
**Lengüeta**

**80-5**

5-PL46-001-B

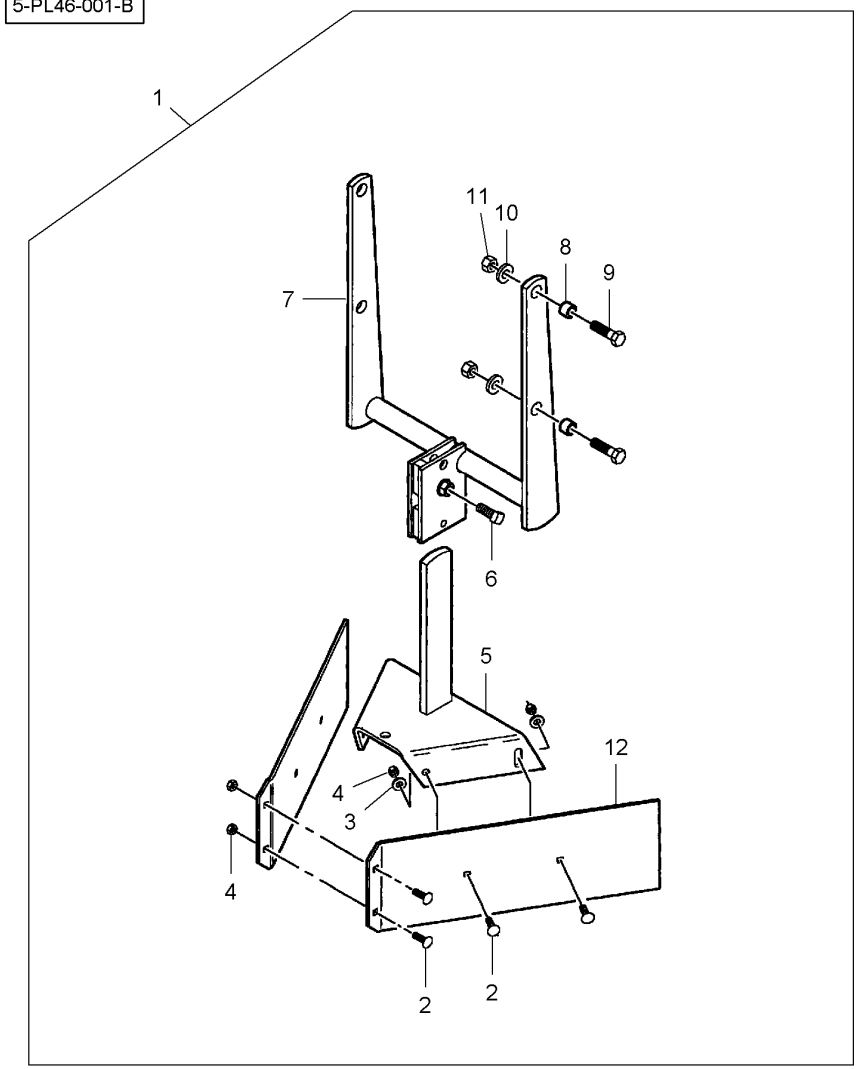


| | | | | | | |
|---|---|---|---|---|---|---|
| 1 | 6100087 | | **1** | KIT, ATTACHMENT | JEU ACCESSOIRES<br>KIT ACCESSORI | SATZ ANBAUTEILE<br>JUEGO ACCESORIO |
| 2 | 364534X1 | 1 5/16"-18 X 1 | **6** | BOLT UNC | BOULON UNC<br>BULLONE UNC | MASCH.SCHRB.UNC<br>PERNO UNC |
| 3 | 700717619 | 1 | **4** | WASHER | RONDELLE<br>RONDELLA | SCHEIBE<br>ARANDELA |
| 4 | Y704163 | 1 5/16"-18 | **6** | LOCKNUT | ECROU FREIN<br>AUTOBLOCCANTE | SICHERUNGSMUTTER<br>CONTRATUERCA |
| 5 | W248158B | 1 | **1** | SUPPORT | SUPPORT<br>SOPPORTO | TRAGER<br>SOPORTE |
| 6 | **70923306** | 1 1/2"-13 X 1 | **1** | SETSCREW | VIS DE BLOCAGE<br>INSIEME VITI | STELLSCHRAUBE<br>SET SCREW |
| 7 | 853825 | 1 | **1** | SUPPORT | SUPPORT<br>SOPPORTO | TRAGER<br>SOPORTE |
| 8 | 700149042 | 1 | **4** | SPACER | ENTRETOISE<br>DISTANZIALE | ABSTANDSTUECK<br>DISCO ESPACIADOR |
| 9 | 70919089 | 1 1/2"-13 X 1-3/4 | **4** | BOLT UNC | BOULON UNC<br>BULLONE UNC | MASCH.SCHRB.UNC<br>PERNO UNC |
| 10 | Y705624 | 1 1/2" | **4** | WASHER | RONDELLE<br>RONDELLA | SCHEIBE<br>ARANDELA |
| 11 | W915793-4 | 1 1/2"-13 | **4** | LOCKNUT | ECROU FREIN<br>AUTOBLOCCANTE | SICHERUNGSMUTTER<br>CONTRATUERCA |
| 12 | W248159B | 1 | **2** | PLATE | PLAQUE<br>PIASTRA | PLATTE<br>PLATO |

**Furrow Disc**
**Disque De Sillon**
**Furchenrad**
**Disco Di Solco**
**Disco De Surco**

# 80-10

5-PL47-003-B

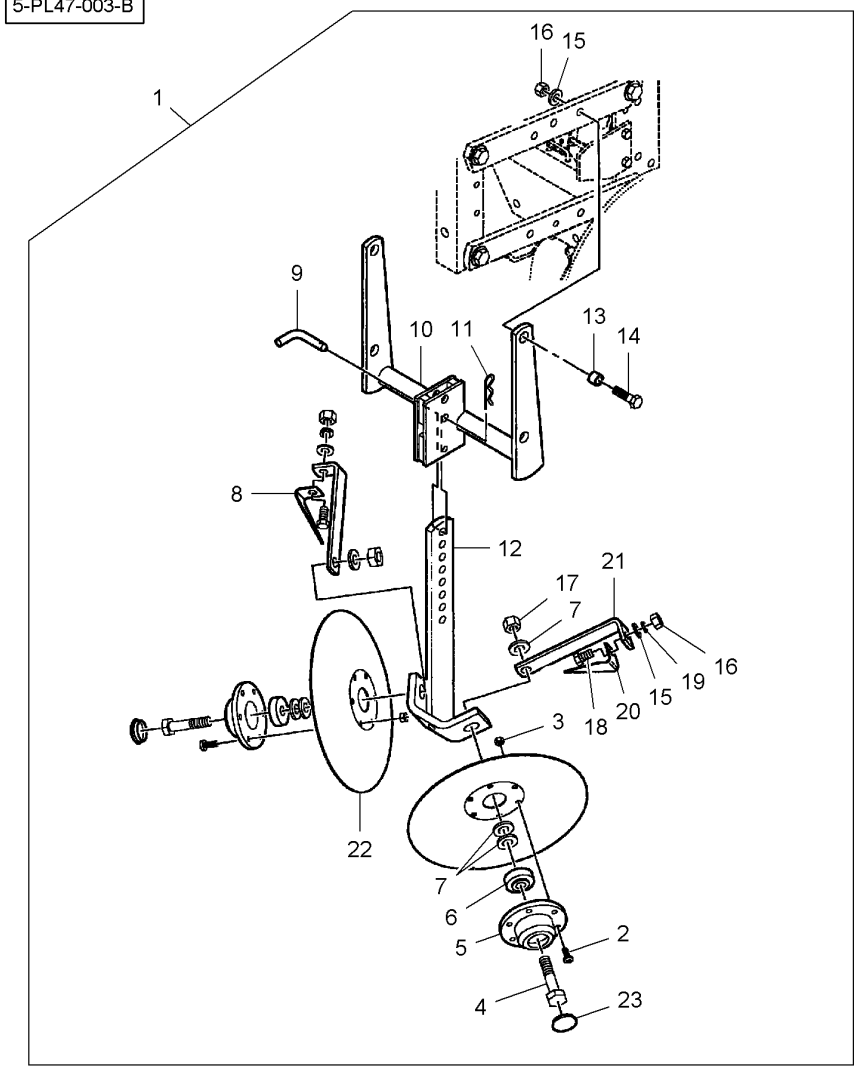


| | | | | | | |
|---|---|---|---|---|---|---|
| 1 | 6100086 | | **1** | KIT, ATTACHMENT | JEU ACCESSOIRES<br>KIT ACCESSORI | SATZ ANBAUTEILE<br>JUEGO ACCESORIO |
| 2 | 70918249 | 1 5/16"-18 X 3/4 | **12** | SCREW | VIS<br>VITE | SCHRAUBE<br>TORNILLO |
| 3 | **70917372** | 1 5/16"-18 | **12** | NUT | ECROU<br>DADO | MUTTER<br>TUERCA |
| 4 | **70923111** | 1 5/8"-11 X 3 | **2** | BOLT UNC | BOULON UNC<br>BULLONE UNC | MASCH.SCHRB.UNC<br>PERNO UNC |
| 5 | **W248424B** | 1 | **2** | HUB | MOYEU<br>MOZZO | NABE<br>CUBO |
| 6 | **W247167B** | 1 | **2** | BEARING ASSY | ROULEMENT<br>CUSCINETTO COMPL | RADIALLAGER<br>RODAMIENTO RAD |
| 7 | 1660993 | 1 | **6** | WASHER | RONDELLE<br>RONDELLA | SCHEIBE<br>ARANDELA |
| 8 | W246359B | 1 ▶ | **1** | SCRAPER | RACLETTE<br>PALETTA RASCHIA. | KRATZER<br>PALETA |
| 9 | W248069B | 1 | **1** | PIN | GOUPILLE<br>COPPIGLIA | STIFT<br>PASADOR |
| 10 | 853821 | 1 | **1** | SUPPORT | SUPPORT<br>SOPPORTO | TRAGER<br>SOPORTE |
| 11 | 98-2107 | 1 | **1** | HAIR PIN | EPINGLE<br>FORCINA | SICHERUNGSFEDER<br>RETENEDOR ELAST |
| 12 | W248066B | 1 | **1** | SUPPORT | SUPPORT<br>SOPPORTO | TRAGER<br>SOPORTE |
| 13 | 700149042 | 1 | **4** | SPACER | ENTRETOISE<br>DISTANZIALE | ABSTANDSTUECK<br>DISCO ESPACIADOR |
| 14 | 70919089 | 1 1/2"-13 X 1-3/4 | **4** | BOLT UNC | BOULON UNC<br>BULLONE UNC | MASCH.SCHRB.UNC<br>PERNO UNC |
| 15 | Y705624 | 1 1/2" | **6** | WASHER | RONDELLE<br>RONDELLA | SCHEIBE<br>ARANDELA |
| 16 | 375098X1 | 1 1/2"-13 | **6** | NUT UNC | ECROU UNC<br>DADO UNC | MUTTER UNC<br>TUERCA UNC |
| 17 | 70926937 | 1 5/8"-11 | **2** | LOCKNUT | ECROU FREIN<br>AUTOBLOCCANTE | SICHERUNGSMUTTER<br>CONTRATUERCA |
| 18 | 353723X1 | 1 1/2"-13 X 1 | **2** | BOLT UNC | BOULON UNC<br>BULLONE UNC | MASCH.SCHRB.UNC<br>PERNO UNC |
| 19* | 353439X1 | 1 1/2" | **2** | LOCK WASHER | RONDELLE FREIN<br>RONDELLA ARRESTO | SICHERUNGSRING<br>ARANDELA SEGURID |
| 20 | W246360B | 1 ◀ | **1** | SCRAPER | RACLETTE<br>PALETTA RASCHIA. | KRATZER<br>PALETA |
| 21 | W246833B | 1 | **2** | SUPPORT | SUPPORT<br>SOPPORTO | TRAGER<br>SOPORTE |
| 22 | W248484B | 1 | **2** | DISC | DISQUE<br>DISCO | SCHEIBE<br>DISCO |
| 23 | **W247165B** | 1 | **2** | CAP | CHAPEAU<br>CAPUCHON | KAPPE<br>TAPA |

**Furrow Disc**
**Disque De Sillon**
**Furchenrad**
**Disco Di Solco**
**Disco De Surco**

# 80-15

5-PL47-004-B

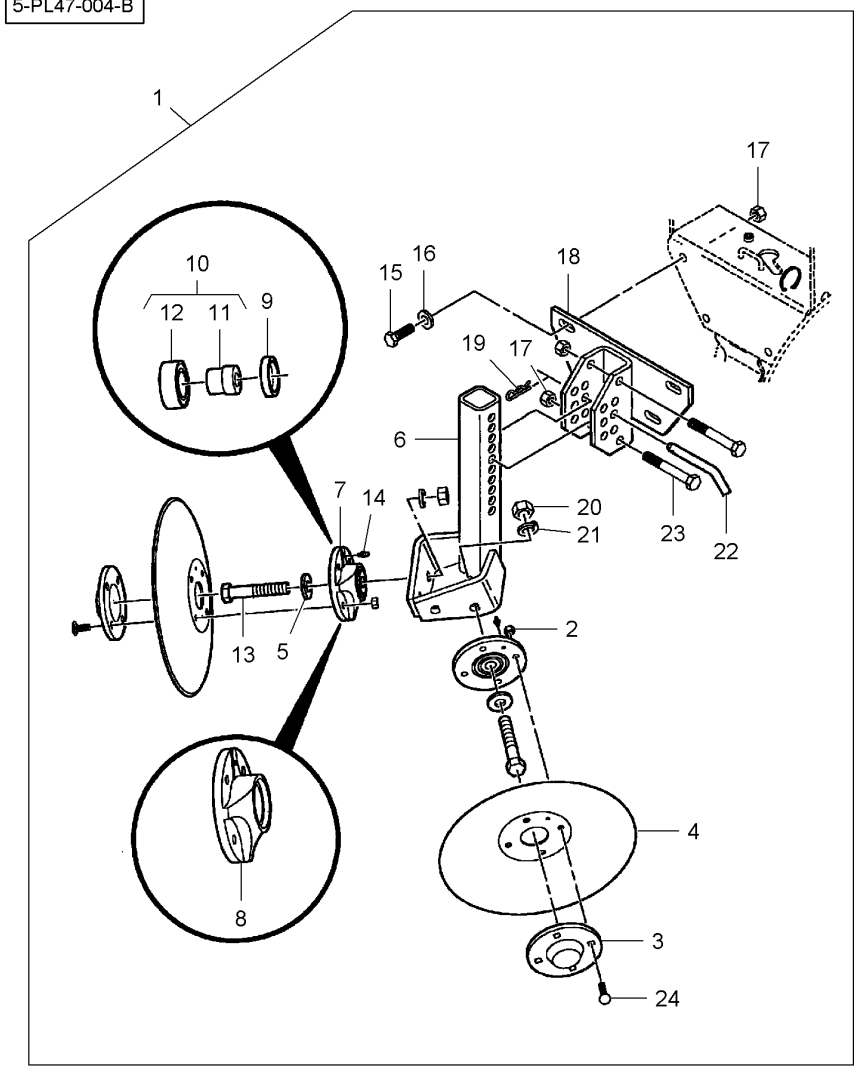


| | | | | | | |
|---|---|---|---|---|---|---|
| 1 | 6000532 | | | **1** | KIT, ATTACHMENT | JEU ACCESSOIRES<br>KIT ACCESSORI | SATZ ANBAUTEILE<br>JUEGO ACCESORIO |
| 2 | 10162 | 1 | 5/16"-18 | **8** | LOCKNUT | ECROU FREIN<br>AUTOBLOCCANTE | SICHERUNGSMUTTER<br>CONTRATUERCA |
| 3 | YM2965-352 | 1 | | **2** | HUB | MOYEU<br>MOZZO | NABE<br>CUBO |
| 4 | YM2571-181 | 1 | | **2** | DISC | DISQUE<br>DISCO | SCHEIBE<br>DISCO |
| 5 | 10030 | 1 | | **2** | WASHER | RONDELLE<br>RONDELLA | SCHEIBE<br>ARANDELA |
| 6 | YM2965-200 | 1 | | **1** | BRACKET | SUPPORT FIXATION<br>STAFFETTA | HALTEARM<br>SOPORTE |
| 7 | YM2965-128 | 1 | | **2** | HUB | MOYEU<br>MOZZO | NABE<br>CUBO |
| 8 | YM2965-351 | 7 | | **1** | HUB | MOYEU<br>MOZZO | NABE<br>CUBO |
| 9 | YM2550-052 | 7 | | **1** | OIL SEAL | BAGUE ETANCHEITE<br>BOCCOLA PARAOLIO | OELDICHTRING<br>BUJE RETENACEITE |
| 10 | YM2965-127 | 7 | | **1** | BEARING | COUSSINET<br>CUSCINETTO | LAGER<br>COJINETE |
| 11 | YM2570-715 | 10 | | **1** | INSERT | DOUILLE<br>INSERTO | EINSATZSTUECK<br>INSERCION |
| 12 | YM2570-594 | 10 | | **1** | BEARING | COUSSINET<br>CUSCINETTO | LAGER<br>COJINETE |
| 13 | YM2570-741 | 1 | 5/8"-11 X 3-1/2 | **2** | BOLT | BOULON<br>BULLONE | BOLZEN<br>BULON |
| 14 | **70923219** | 1 | 1/4"-28 | **2** | GREASE FITTING | GRAISSEUR<br>INGRASSATORE | DRUCKSCHMIERKOPF<br>ENGRASADOR |
| 15 | 353724X1 | 1 | 1/2"-13 X 1-1/2 | **3** | BOLT UNC | BOULON UNC<br>BULLONE UNC | MASCH.SCHRB.UNC<br>PERNO UNC |
| 16 | 700717693 | 1 | 1/2" | **3** | WASHER | RONDELLE<br>RONDELLA | SCHEIBE<br>ARANDELA |
| 17 | 704858 | 1 | 1/2"-13 | **5** | LOCKNUT | ECROU FREIN<br>AUTOBLOCCANTE | SICHERUNGSMUTTER<br>CONTRATUERCA |
| 18 | YM2967-266 | 1 | | **1** | BRACKET | SUPPORT FIXATION<br>STAFFETTA | HALTEARM<br>SOPORTE |
| 19 | YM2570-448 | 1 | 1/8" | **1** | PIN | GOUPILLE<br>COPPIGLIA | STIFT<br>PASADOR |
| 20 | 70932665 | 1 | 5/8"-11 | **2** | NUT UNC | ECROU UNC<br>DADO UNC | MUTTER UNC<br>TUERCA UNC |
| 21 | 353433X1 | 1 | 5/8" | **2** | LOCK WASHER | RONDELLE FREIN<br>RONDELLA ARRESTO | SICHERUNGSRING<br>ARANDELA SEGURID |
| 22 | YM2965-305 | 1 | | **1** | PIN | GOUPILLE<br>COPPIGLIA | STIFT<br>PASADOR |
| 23 | YM2502-316 | 1 | 1/2"-13 X 3-1/2 | **2** | SCREW | VIS<br>VITE | SCHRAUBE<br>TORNILLO |
| 24 | 7700107 | 1 | 5/16"-18 X1-1/4 | **8** | CAPSCREW | VIS BOUCHON<br>TAPPO A VITE | HUTSCHRAUBE<br>TORNILLO TAPON |

**Furrow Disc**
**Disque De Sillon**
**Furchenrad**
**Disco Di Solco**
**Disco De Surco**

# 80-20

**Ridge Disc**
**Disque D'Arête**
**Kamm-Scheibe**
**Disco Di Cresta**
**Disco De Canto**

5-PL47-005-B

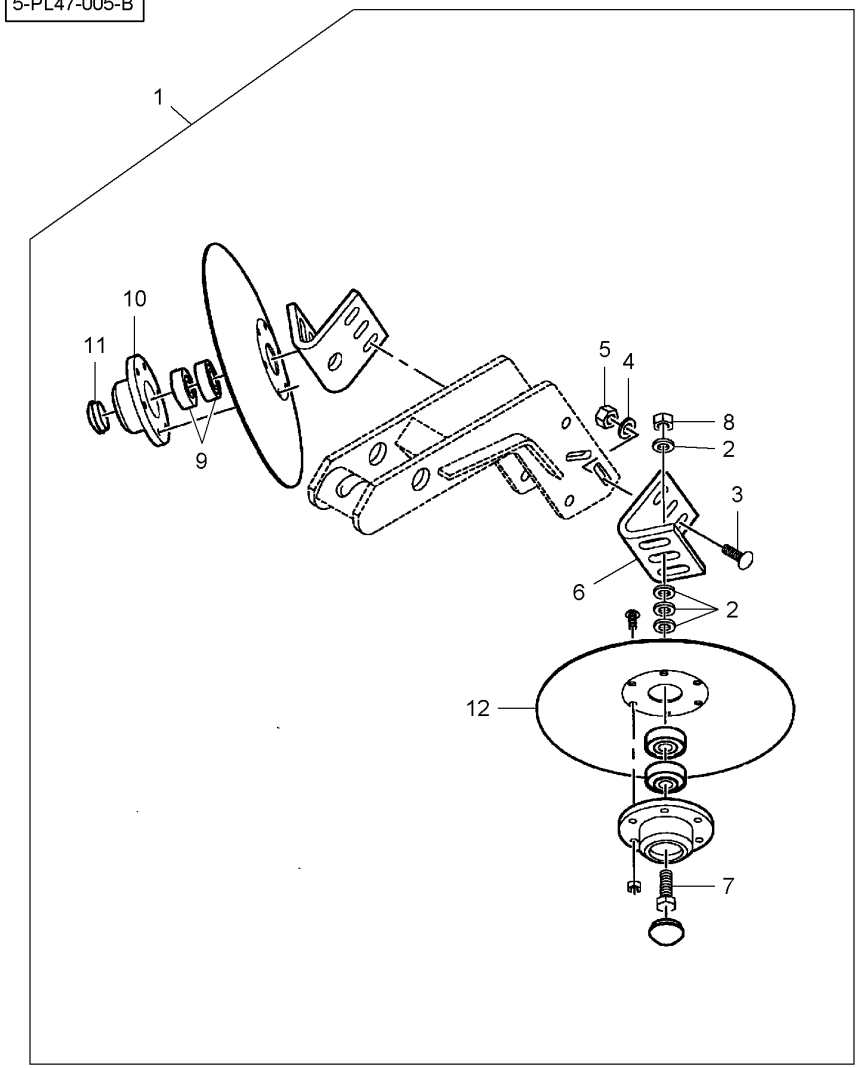


| | | | | | | |
|---|---|---|---|---|---|---|
| 1 | 2087119 | | | **1** | KIT, ATTACHMENT | JEU ACCESSOIRES<br>KIT ACCESSORI<br>SATZ ANBAUTEILE<br>JUEGO ACCESORIO |
| 2 | 700717526 | 1 | | **8** | WASHER | RONDELLE<br>RONDELLA<br>SCHEIBE<br>ARANDELA |
| 3 | 70923220 | 1 | 3/8"-16 X 1-1/4 | **4** | BOLT UNC | BOULON UNC<br>BULLONE UNC<br>MASCH.SCHRB.UNC<br>PERNO UNC |
| 4 | **K2880** | 1 | | **4** | WASHER | RONDELLE<br>RONDELLA<br>SCHEIBE<br>ARANDELA |
| 5 | 7704141 | 1 | 3/8"-16 | **4** | LOCKNUT | ECROU FREIN<br>AUTOBLOCCANTE<br>SICHERUNGSMUTTER<br>CONTRATUERCA |
| 6 | W248485B | 1 | | **2** | BRACKET | SUPPORT FIXATION<br>STAFFETTA<br>HALTEARM<br>SOPORTE |
| 7 | 369275X1 | 1 | 5/8"-11 X 2-3/4 | **2** | BOLT UNC | BOULON UNC<br>BULLONE UNC<br>MASCH.SCHRB.UNC<br>PERNO UNC |
| 8 | 70926937 | 1 | 5/8"-11 | **2** | LOCKNUT | ECROU FREIN<br>AUTOBLOCCANTE<br>SICHERUNGSMUTTER<br>CONTRATUERCA |
| 9 | **W247167B** | 1 | | **4** | BEARING ASSY | ROULEMENT<br>CUSCINETTO COMPL<br>RADIALLAGER<br>RODAMIENTO RAD |
| 10 | **W248424B** | 1 | | **2** | HUB | MOYEU<br>MOZZO<br>NABE<br>CUBO |
| 11 | **W247165B** | 1 | | **2** | CAP | CHAPEAU<br>CAPUCHON<br>KAPPE<br>TAPA |
| 12 | W248484B | 1 | | **2** | DISC | DISQUE<br>DISCO<br>SCHEIBE<br>DISCO |

**Furrow Disc**
**Disque De Sillon**
**Furchenrad**
**Disco Di Solco**
**Disco De Surco**

# 80-25

5-PL47-006-B

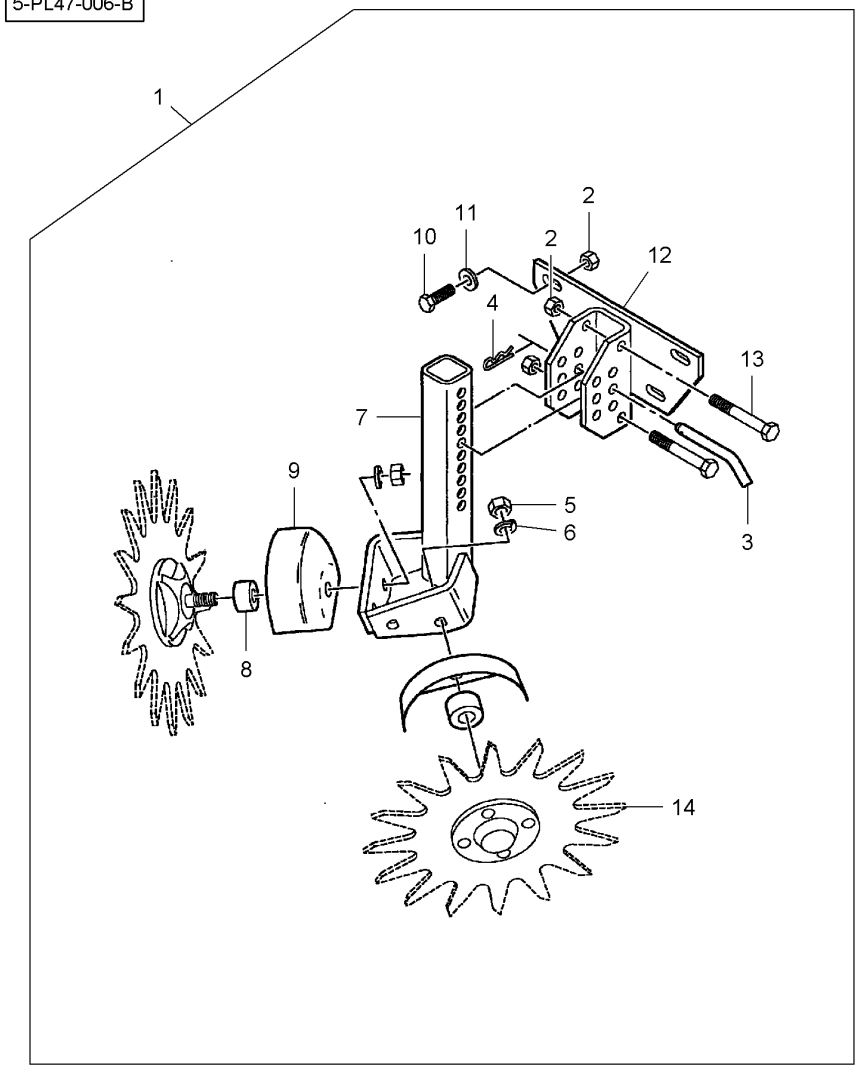


| | | | | | | |
|---|---|---|---|---|---|---|
| 1 | 6000533 | | **1** | KIT, ATTACHMENT | JEU ACCESSOIRES<br>KIT ACCESSORI | SATZ ANBAUTEILE<br>JUEGO ACCESORIO |
| 2 | 704858 | 1 1/2"-13 | **5** | LOCKNUT | ECROU FREIN<br>AUTOBLOCCANTE | SICHERUNGSMUTTER<br>CONTRATUERCA |
| 3 | YM2965-305 | 1 | **1** | PIN | GOUPILLE<br>COPPIGLIA | STIFT<br>PASADOR |
| 4 | YM2570-448 | 1 1/8" | **1** | PIN | GOUPILLE<br>COPPIGLIA | STIFT<br>PASADOR |
| 5 | 70932665 | 1 5/8"-11 | **2** | NUT UNC | ECROU UNC<br>DADO UNC | MUTTER UNC<br>TUERCA UNC |
| 6 | 353433X1 | 1 5/8" | **2** | LOCK WASHER | RONDELLE FREIN<br>RONDELLA ARRESTO | SICHERUNGSRING<br>ARANDELA SEGURID |
| 7 | YM2965-200 | 1 | **1** | BRACKET | SUPPORT FIXATION<br>STAFFETTA | HALTEARM<br>SOPORTE |
| 8 | YM2967-302 | 1 | **2** | SPACER | ENTRETOISE<br>DISTANZIALE | ABSTANDSTUECK<br>DISCO ESPACIADOR |
| 9 | YM2967-336 | 1 | **2** | SHIELD | TOLE<br>RIPARO | SCHILD<br>BLINDAJE |
| 10 | 353724X1 | 1 1/2"-13 X 1-1/2 | **3** | BOLT UNC | BOULON UNC<br>BULLONE UNC | MASCH.SCHRB.UNC<br>PERNO UNC |
| 11 | 700717693 | 1 1/2" | **3** | WASHER | RONDELLE<br>RONDELLA | SCHEIBE<br>ARANDELA |
| 12 | YM2967-266 | 1 | **1** | BRACKET | SUPPORT FIXATION<br>STAFFETTA | HALTEARM<br>SOPORTE |
| 13 | YM2502-316 | 1 1/2"-13 X 3-1/2 | **2** | SCREW | VIS<br>VITE | SCHRAUBE<br>TORNILLO |
| 14 | | 1 80-45 No | **2** | DISC | DISQUE<br>DISCO | SCHEIBE<br>DISCO |

**Furrow Disc**
**Disque De Sillon**
**Furchenrad**
**Disco Di Solco**
**Disco De Surco**

# 80-30

5-PL47-007-B

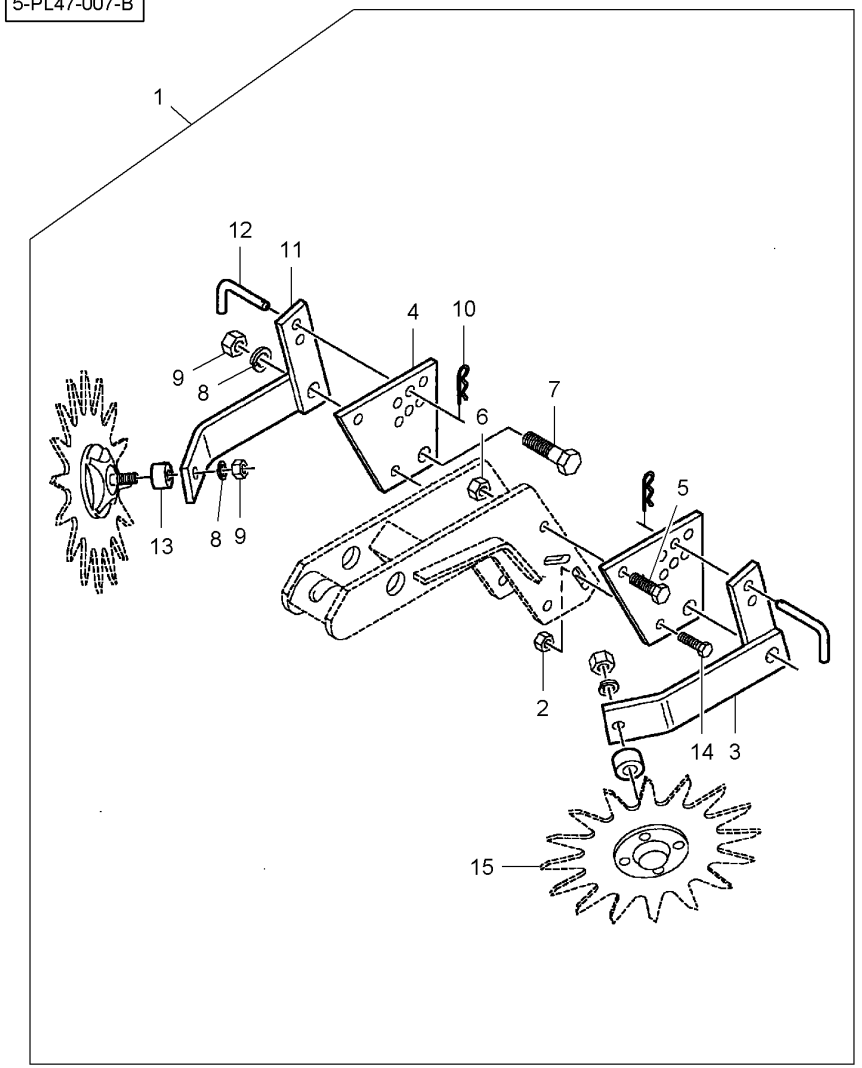


| | | | | | | |
|---|---|---|---|---|---|---|
| 1 | 6000304 | | 1 | KIT, ATTACHMENT | JEU ACCESSOIRES<br>KIT ACCESSORI | SATZ ANBAUTEILE<br>JUEGO ACCESORIO |
| 2 | 10163 | 1 3/8"-16 | 2 | LOCKNUT | ECROU FREIN<br>AUTOBLOCCANTE | SICHERUNGSMUTTER<br>CONTRATUERCA |
| 3 | YM2967-218 | 1 ◀ | 1 | BRACKET | SUPPORT FIXATION<br>STAFFETTA | HALTEARM<br>SOPORTE |
| 4 | YM2967-362 | 1 | 2 | PLATE | PLAQUE<br>PIASTRA | PLATTE<br>PLATO |
| 5 | 353724X1 | 1 1/2"-13 X 1-1/2 | 2 | BOLT UNC | BOULON UNC<br>BULLONE UNC | MASCH.SCHRB.UNC<br>PERNO UNC |
| 6 | W915793-4 | 1 1/2"-13 | 2 | LOCKNUT | ECROU FREIN<br>AUTOBLOCCANTE | SICHERUNGSMUTTER<br>CONTRATUERCA |
| 7 | 354285X1 | 1 5/8"-11 X 2-1/4 | 2 | BOLT UNC | BOULON UNC<br>BULLONE UNC | MASCH.SCHRB.UNC<br>PERNO UNC |
| 8 | 353433X1 | 1 5/8" | 4 | LOCK WASHER | RONDELLE FREIN<br>RONDELLA ARRESTO | SICHERUNGSRING<br>ARANDELA SEGURID |
| 9 | 70932665 | 1 5/8"-11 | 4 | NUT UNC | ECROU UNC<br>DADO UNC | MUTTER UNC<br>TUERCA UNC |
| 10 | YM2570-448 | 1 | 2 | PIN | GOUPILLE<br>COPPIGLIA | STIFT<br>PASADOR |
| 11 | YM2967-217 | 1 ▶ | 1 | BRACKET | SUPPORT FIXATION<br>STAFFETTA | HALTEARM<br>SOPORTE |
| 12 | YM2967-381 | 1 | 2 | PIN | GOUPILLE<br>COPPIGLIA | STIFT<br>PASADOR |
| 13 | YM2967-302 | 1 | 2 | SPACER | ENTRETOISE<br>DISTANZIALE | ABSTANDSTUECK<br>DISCO ESPACIADOR |
| 14 | 70920415 | 1 3/8"-16 X 1-1/4 | 2 | BOLT UNC | BOULON UNC<br>BULLONE UNC | MASCH.SCHRB.UNC<br>PERNO UNC |
| 15 | | 1 👁 80-45 No | 2 | DISC | DISQUE<br>DISCO | SCHEIBE<br>DISCO |

**Furrow Disc**
**Disque De Sillon**
**Furchenrad**
**Disco Di Solco**
**Disco De Surco**

**80-35**

5-PL47-010-A

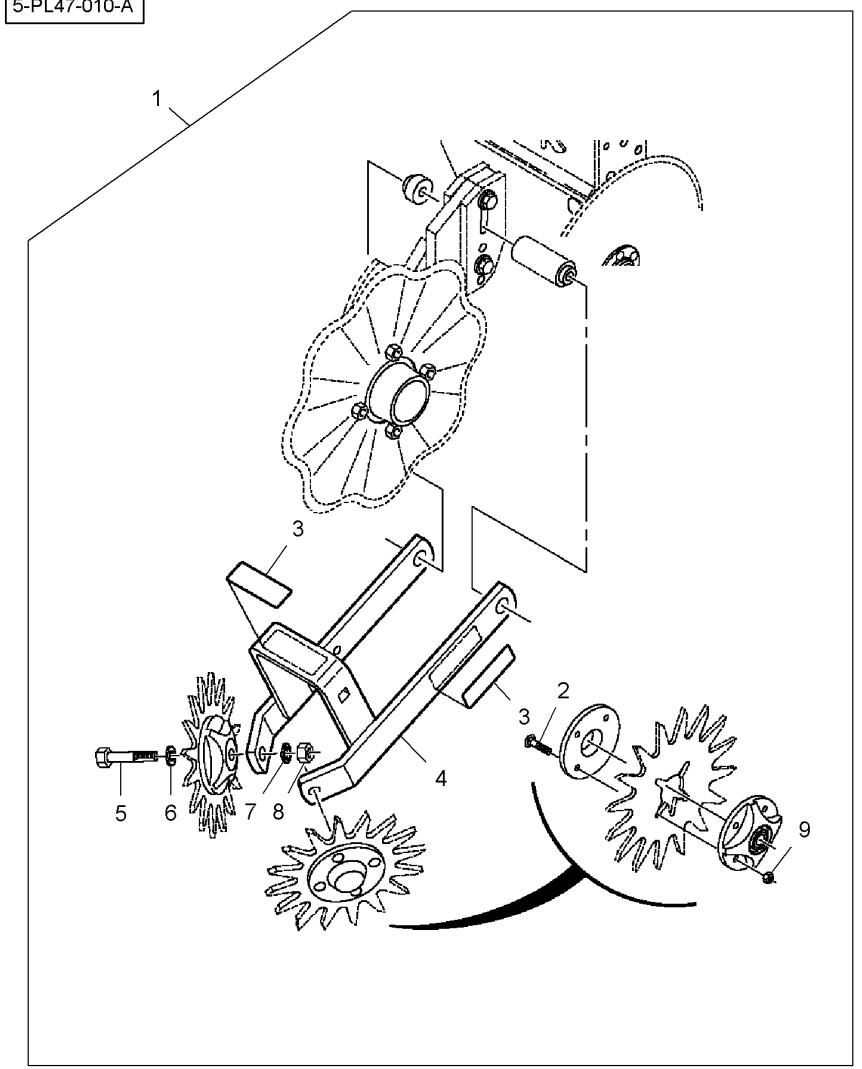


| | | | | | |
|---|---|---|---|---|---|
| 1* | 6100456 | | **1** | KIT, ATTACHMENT | JEU ACCESSOIRES<br>KIT ACCESSORI | SATZ ANBAUTEILE<br>JUEGO ACCESORIO |
| 2* | 704163 | 1 5/16"-18 | **8** | LOCKNUT | ECROU FREIN<br>AUTOBLOCCANTE | SICHERUNGSMUTTER<br>CONTRATUERCA |
| 3* | YM2565-162 | 1 | **2** | DECAL | DECALCOMANIE<br>DECALCOMANIA | AUFKLEBER<br>CALCOMANIA |
| 4* | YM2967-210 | 1 | **1** | ARM | BRAS<br>BRACCIO | SCHARHEBEL<br>BRAZO |
| 5* | YM2570-740 | 1 5/8"-11 X 3 | **2** | BOLT | BOULON<br>BULLONE | BOLZEN<br>BULON |
| 6* | 10030 | 1 | **2** | WASHER | RONDELLE<br>RONDELLA | SCHEIBE<br>ARANDELA |
| 7* | 705061 | 1 5/8" | **2** | LOCK WASHER | RONDELLE FREIN<br>RONDELLA ARRESTO | SICHERUNGSRING<br>ARANDELA SEGURID |
| 8* | 704130 | 1 5/8"-11 | **2** | NUT UNC | ECROU UNC<br>DADO UNC | MUTTER UNC<br>TUERCA UNC |
| 9* | 7770308 | 1 5/16"-18 X 1-1/2 | **8** | BOLT | BOULON<br>BULLONE | BOLZEN<br>BULON |

**Furrow Disc**
**Disque De Sillon**
**Furchenrad**
**Disco Di Solco**
**Disco De Surco**

# 80-40

5-PL47-008-B

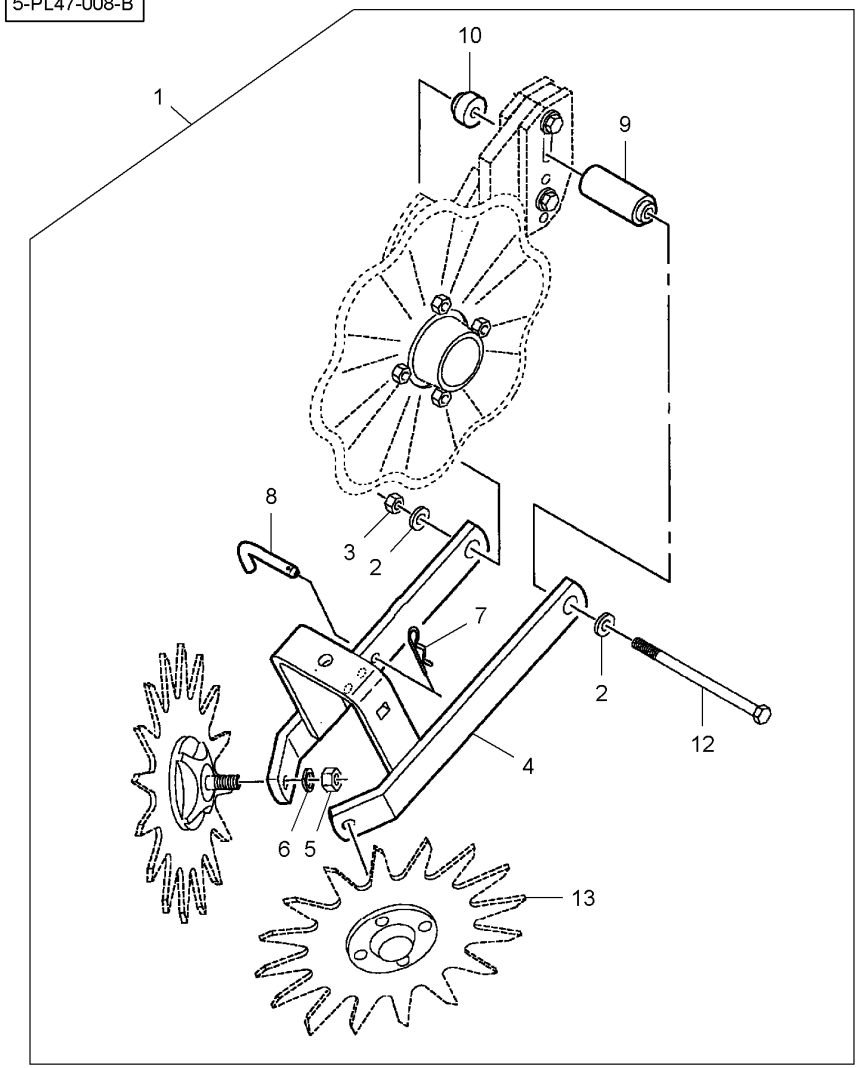


| | | | | | |
|---|---|---|---|---|---|
| 1 | 6000291 | 13" | **1** KIT, ATTACHMENT | JEU ACCESSOIRES<br>KIT ACCESSORI | SATZ ANBAUTEILE<br>JUEGO ACCESORIO |
| 2 | 70918431 | 1 1/2" | **2** FLAT WASHER | RONDELLE PLATE<br>RONDELLE PIANA | UNTERLEGSCHEIBEN<br>ARANDELA PLANA |
| 3 | YM2520-357 | 1 1/2"-13 | **1** NUT | ECROU<br>DADO | MUTTER<br>TUERCA |
| 4 | YM2967-210 | 1 | **1** ARM | BRAS<br>BRACCIO | SCHARHEBEL<br>BRAZO |
| 5 | 70932665 | 1 5/8"-11 | **2** NUT UNC | ECROU UNC<br>DADO UNC | MUTTER UNC<br>TUERCA UNC |
| 6 | 353433X1 | 1 5/8" | **2** LOCK WASHER | RONDELLE FREIN<br>RONDELLA ARRESTO | SICHERUNGSRING<br>ARANDELA SEGURID |
| 7 | YM2570-448 | 1 | **1** PIN | GOUPILLE<br>COPPIGLIA | STIFT<br>PASADOR |
| 8 | YM2967-381 | 1 | **1** PIN | GOUPILLE<br>COPPIGLIA | STIFT<br>PASADOR |
| 9 | YM2967-341 | 1 | **1** SPACER | ENTRETOISE<br>DISTANZIALE | ABSTANDSTUECK<br>DISCO ESPACIADOR |
| 10 | YM2967-342 | 1 | **1** SPACER | ENTRETOISE<br>DISTANZIALE | ABSTANDSTUECK<br>DISCO ESPACIADOR |
| 11 | YM2565-162 | 1 [A] | **2** DECAL | DECALCOMANIE<br>DECALCOMANIA | AUFKLEBER<br>CALCOMANIA |
| 12 | 368410X1 | 1 1/2"-13 X 8 | **1** BOLT UNC | BOULON UNC<br>BULLONE UNC | MASCH.SCHRB.UNC<br>PERNO UNC |
| 13 | | 1 80-45 No | **2** DISC | DISQUE<br>DISCO | SCHEIBE<br>DISCO |

[A] NOT ILLUSTRATED
NON ILLUSTRE
NICHT ILLUSTRIERT
NON ILLUSTRATO
NO ILUSTRADO

**Disc**
**Disque**
**Scheibe**
**Disco**
**Disco**

# 80-45

5-PL11-001-B

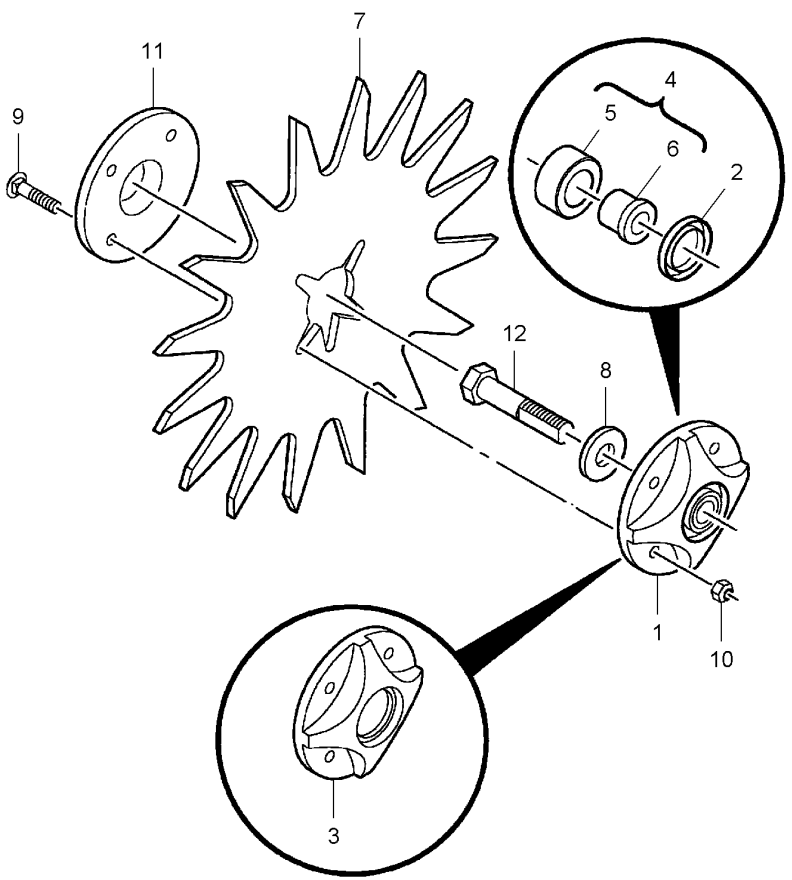


| | | | | | | |
|---|---|---|---|---|---|---|
| 1 | YM2965-128 | | **1** | HUB | MOYEU<br>MOZZO | NABE<br>CUBO |
| 2 | YM2550-052 | 1 | **1** | OIL SEAL | BAGUE ETANCHEITE<br>BOCCOLA PARAOLIO | OELDICHTRING<br>BUJE RETENACEITE |
| 3 | YM2965-351 | 1 | **1** | HUB | MOYEU<br>MOZZO | NABE<br>CUBO |
| 4 | YM2965-127 | 1 | **1** | BEARING | COUSSINET<br>CUSCINETTO | LAGER<br>COJINETE |
| 5 | YM2570-594 | 4 | **1** | BEARING | COUSSINET<br>CUSCINETTO | LAGER<br>COJINETE |
| 6 | YM2570-715 | 4 | **1** | INSERT | DOUILLE<br>INSERTO | EINSATZSTUECK<br>INSERCION |
| 7 | YM2967-404 | | **1** | WHEEL | ROUE<br>RUOTA | RAD<br>RUEDA |
| 8 | 10030 | | **1** | WASHER | RONDELLE<br>RONDELLA | SCHEIBE<br>ARANDELA |
| 9 | 7770308 | 5/16"-18 X 1-1/2 | **4** | BOLT | BOULON<br>BULLONE | BOLZEN<br>BULON |
| 10 | Y704163 | 5/16"-18 | **4** | LOCKNUT | ECROU FREIN<br>AUTOBLOCCANTE | SICHERUNGSMUTTER<br>CONTRATUERCA |
| 11 | YM2965-352 | | **1** | HUB | MOYEU<br>MOZZO | NABE<br>CUBO |
| 12 | YM2570-740 | 5/8"-11 X 3 | **1** | BOLT | BOULON<br>BULLONE | BOLZEN<br>BULON |
| 12 | YM2570-742 | 5/8"-11 X 4 | **1** | BOLT | BOULON<br>BULLONE | BOLZEN<br>BULON |

**Furrow Disc**
**Disque De Sillon**
**Furchenrad**
**Disco Di Solco**
**Disco De Surco**

**80-50**

5-PL47-009-A

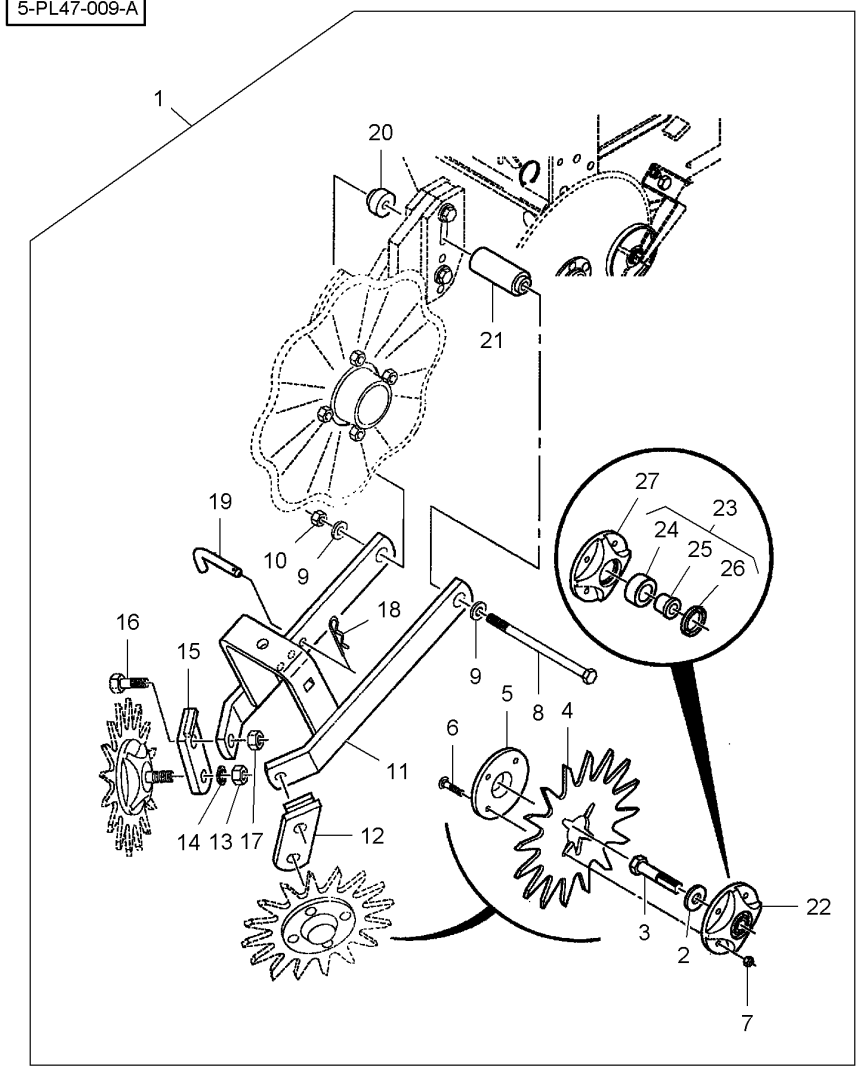


| | | | | | |
|---|---|---|---|---|---|
| 1* | 6000757 | | 1 | KIT, ATTACHMENT | JEU ACCESSOIRES<br>KIT ACCESSORI<br>SATZ ANBAUTEILE<br>JUEGO ACCESORIO |
| 2* | 10030 | 1 | 2 | WASHER | RONDELLE<br>RONDELLA<br>SCHEIBE<br>ARANDELA |
| 3* | YM2570-740 | 1 5/8"-11 X 3 | 2 | BOLT | BOULON<br>BULLONE<br>BOLZEN<br>BULON |
| 4* | YM2967-388 | 1 10" | 2 | WHEEL | ROUE<br>RUOTA<br>RAD<br>RUEDA |
| 5* | WM2965-352 | 1 | 2 | HUB | MOYEU<br>MOZZO<br>NABE<br>CUBO |
| 6* | 7770308 | 1 5/16"-18 X 1-1/2 | 8 | BOLT | BOULON<br>BULLONE<br>BOLZEN<br>BULON |
| 7* | 704163 | 1 5/16"-18 | 8 | LOCKNUT | ECROU FREIN<br>AUTOBLOCCANTE<br>SICHERUNGSMUTTER<br>CONTRATUERCA |
| 8* | YM2502-369 | 1 1/2"-13 X 8 | 1 | SCREW | VIS<br>VITE<br>SCHRAUBE<br>TORNILLO |
| 9* | 700709605 | 1 1/2" | 2 | WASHER | RONDELLE<br>RONDELLA<br>SCHEIBE<br>ARANDELA |
| 10* | YW915793-4 | 1 1/2"-13 | 1 | LOCKNUT | ECROU FREIN<br>AUTOBLOCCANTE<br>SICHERUNGSMUTTER<br>CONTRATUERCA |
| 11* | YM2967-210 | 1 | 1 | ARM | BRAS<br>BRACCIO<br>SCHARHEBEL<br>BRAZO |
| 12* | YM2967-291 | 1 ◀ | 1 | BRACKET | SUPPORT FIXATION<br>STAFFETTA<br>HALTEARM<br>SOPORTE |
| 13* | 704130 | 1 5/8"-11 | 2 | NUT UNC | ECROU UNC<br>DADO UNC<br>MUTTER UNC<br>TUERCA UNC |
| 14* | 705061 | 1 5/8" | 2 | LOCK WASHER | RONDELLE FREIN<br>RONDELLA ARRESTO<br>SICHERUNGSRING<br>ARANDELA SEGURID |
| 15* | YM2967-290 | 1 ▶ | 1 | BRACKET | SUPPORT FIXATION<br>STAFFETTA<br>HALTEARM<br>SOPORTE |
| 16* | YM2570-743 | 1 5/8"-11 X 1-3/4 | 2 | CAPSCREW | VIS BOUCHON<br>TAPPO A VITE<br>HUTSCHRAUBE<br>TORNILLO TAPON |
| 17* | 704700 | 1 5/8"-11 | 2 | LOCKNUT | ECROU FREIN<br>AUTOBLOCCANTE<br>SICHERUNGSMUTTER<br>CONTRATUERCA |
| 18* | YM2570-448 | 1 | 1 | PIN | GOUPILLE<br>COPPIGLIA<br>STIFT<br>PASADOR |
| 19* | YM2967-381 | 1 | 1 | PIN | GOUPILLE<br>COPPIGLIA<br>STIFT<br>PASADOR |
| 20* | YM2967-342 | 1 | 1 | SPACER | ENTRETOISE<br>DISTANZIALE<br>ABSTANDSTUECK<br>DISCO ESPACIADOR |
| 21* | YM2967-341 | 1 | 1 | SPACER | ENTRETOISE<br>DISTANZIALE<br>ABSTANDSTUECK<br>DISCO ESPACIADOR |
| 22* | YM2965-128 | 1 | 2 | HUB | MOYEU<br>MOZZO<br>NABE<br>CUBO |
| 23* | YM2965-127 | 22 | 1 | BEARING | COUSSINET<br>CUSCINETTO<br>LAGER<br>COJINETE |
| 24* | YM2570-594 | 23 | 1 | BEARING | COUSSINET<br>CUSCINETTO<br>LAGER<br>COJINETE |
| 25* | YM2570-715 | 23 | 1 | INSERT | DOUILLE<br>INSERTO<br>EINSATZSTUECK<br>INSERCION |
| 26* | YM2550-052 | 23 | 1 | OIL SEAL | BAGUE ETANCHEITE<br>BOCCOLA PARAOLIO<br>OELDICHTRING<br>BUJE RETENACEITE |

**Furrow Disc**
**Disque De Sillon**
**Furchenrad**
**Disco Di Solco**
**Disco De Surco**

**80-50**

5-PL47-009-A

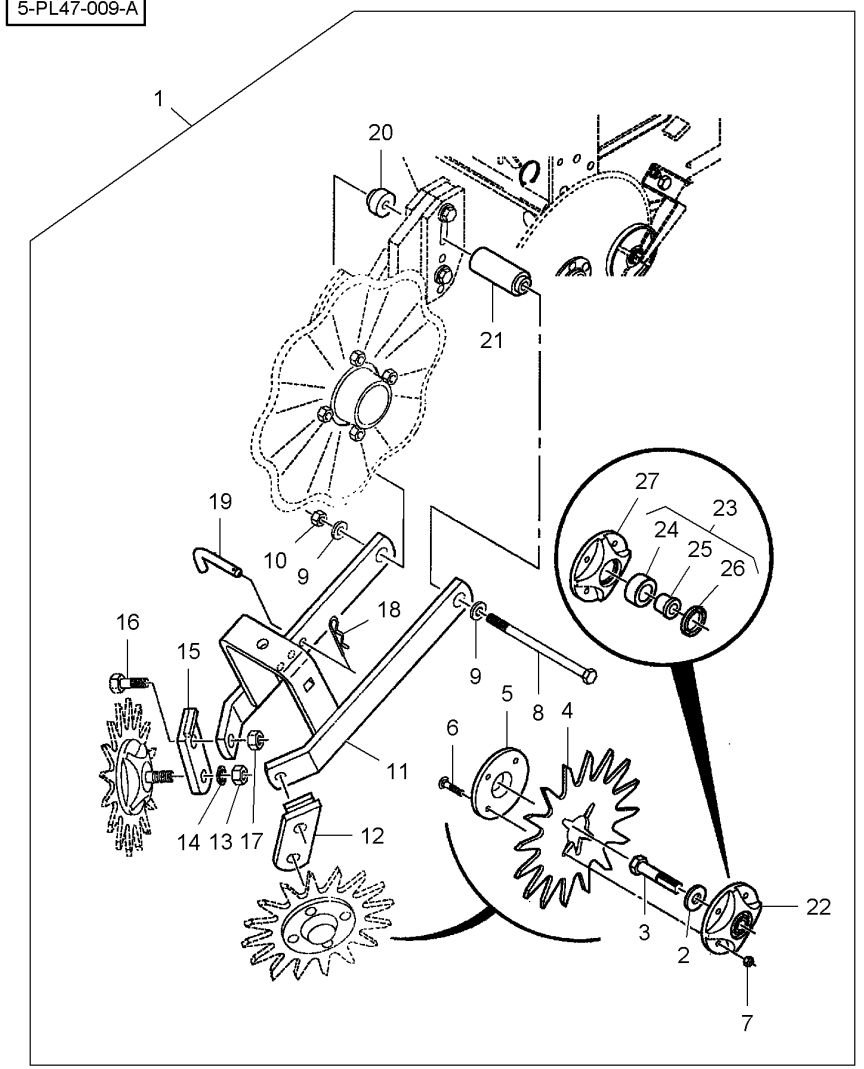


| | | | | | |
|---|---|---|---|---|---|
| 27* | YM2965-351 | 22 | **1** HUB | MOYEU<br>MOZZO | NABE<br>CUBO |
| 28* | YM2565-162 | 1 [A] | **2** DECAL | DECALCOMANIE<br>DECALCOMANIA | AUFKLEBER<br>CALCOMANIA |

[A] NOT ILLUSTRATED
NON ILLUSTRE
NICHT ABGEBILDET
NON ILLUSTRATO
NO ILUSTRADO

**Spring Tine**
**Dent Ressort**
**Federzinken**
**Dente A Molla**
**Brazo Con Muelle**

**80-55**

5-PL48-001-B

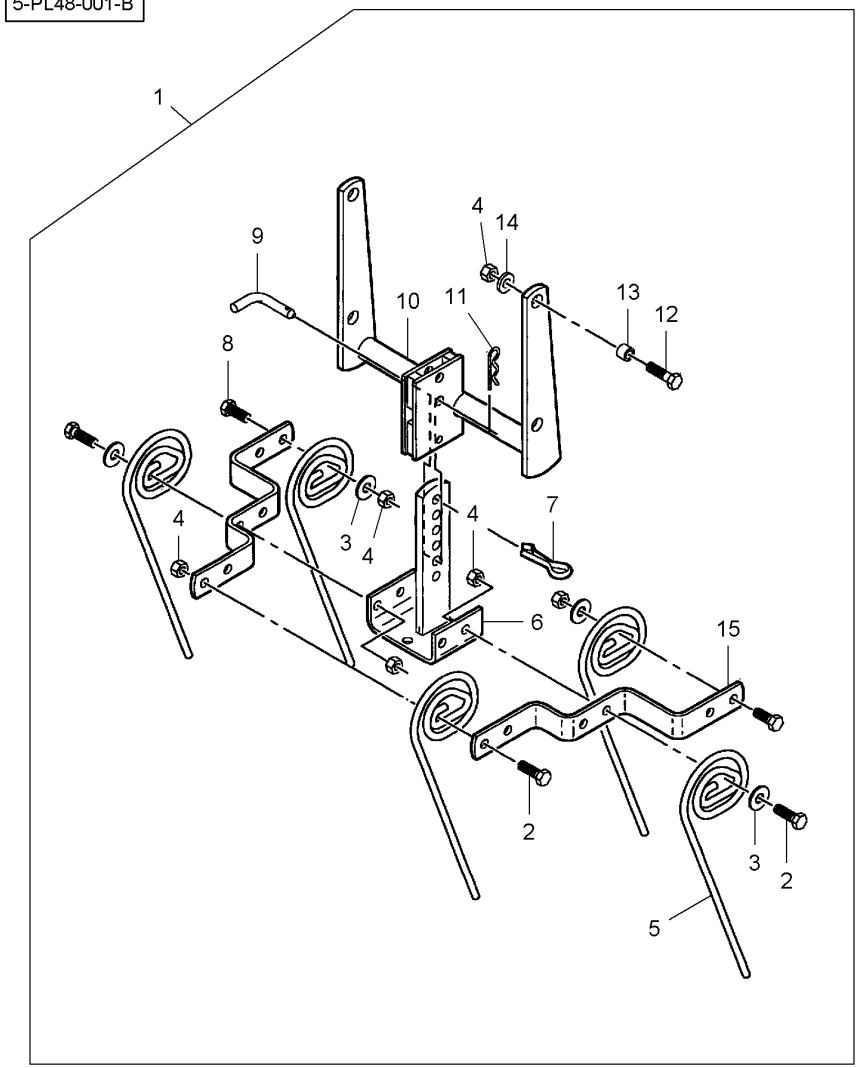


| | | | | | | |
|---|---|---|---|---|---|---|
| 1 | 6100085 | | **1** | KIT, ATTACHMENT | JEU ACCESSOIRES<br>KIT ACCESSORI | SATZ ANBAUTEILE<br>JUEGO ACCESORIO |
| 2 | 353724X1 | 1 1/2"-13 X 1-1/2 | **6** | BOLT UNC | BOULON UNC<br>BULLONE UNC | MASCH.SCHRB.UNC<br>PERNO UNC |
| 3 | 70918431 | 1 1/2" | **8** | FLAT WASHER | RONDELLE PLATE<br>RONDELLE PIANA | UNTERLEGSCHEIBEN<br>ARANDELA PLANA |
| 4 | Y704288 | 1 | **14** | LOCKNUT | ECROU FREIN<br>AUTOBLOCCANTE | SICHERUNGSMUTTER<br>CONTRATUERCA |
| 5 | W246479B | 1 | **5** | TOOTH | DENT<br>DENTE | ZAHN<br>DIENTE |
| 6 | W248150B | 1 | **1** | SUPPORT | SUPPORT<br>SOPPORTO | TRAGER<br>SOPORTE |
| 7 | 72161984 | 1 | **1** | PIN | GOUPILLE<br>COPPIGLIA | STIFT<br>PASADOR |
| 8 | 70921176 | 1 1/2"-13 X 1-1/4 | **4** | BOLT UNC | BOULON UNC<br>BULLONE UNC | MASCH.SCHRB.UNC<br>PERNO UNC |
| 9 | W248069B | 1 | **1** | PIN | GOUPILLE<br>COPPIGLIA | STIFT<br>PASADOR |
| 10 | 853821 | 1 | **1** | SUPPORT | SUPPORT<br>SOPPORTO | TRAGER<br>SOPORTE |
| 11 | 98-2107 | 1 | **1** | HAIR PIN | EPINGLE<br>FORCINA | SICHERUNGSFEDER<br>RETENEDOR ELAST |
| 12 | 70919089 | 1 1/2"-13 X 1-3/4 | **4** | BOLT UNC | BOULON UNC<br>BULLONE UNC | MASCH.SCHRB.UNC<br>PERNO UNC |
| 13 | 700149042 | 1 | **4** | SPACER | ENTRETOISE<br>DISTANZIALE | ABSTANDSTUECK<br>DISCO ESPACIADOR |
| 14 | Y705624 | 1 1/2" | **4** | WASHER | RONDELLE<br>RONDELLA | SCHEIBE<br>ARANDELA |
| 15 | W246477B | 1 | **2** | FRAME | BATI<br>TELAIO | RAHMEN<br>BASTIDOR |

| Open-Coil Spring<br>Ressort De Pression<br>Druckfeder<br>Molla Di Pressione<br>Resorte De Compresión | 80-60 | Normal Duty<br>Modèle Normal<br>Normal Ausfuehrung<br>Modello Normale<br>Modelo Normal |
|---|---|---|

5-PL49-002-B

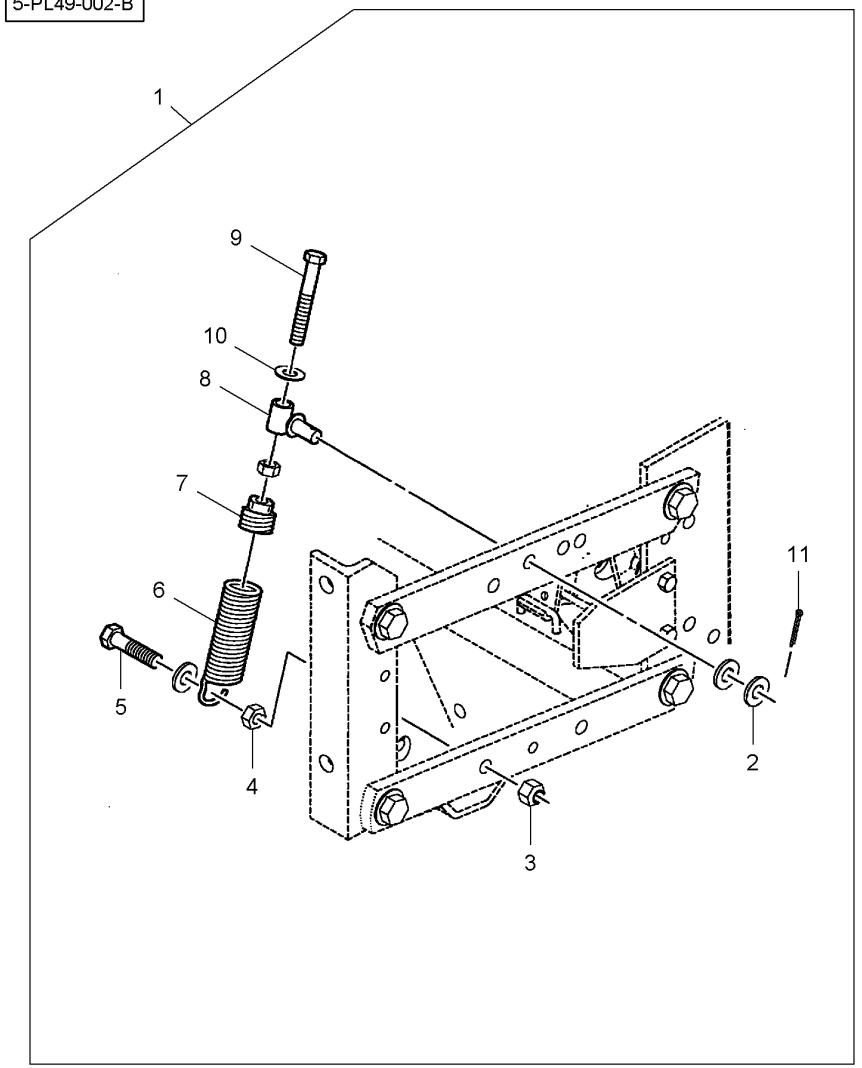


| | | | | | | |
|---|---|---|---|---|---|---|
| 1 | 6100088 | | 1 | KIT, ATTACHMENT | JEU ACCESSOIRES<br>KIT ACCESSORI | SATZ ANBAUTEILE<br>JUEGO ACCESORIO |
| 2 | Y705624 | 1 1/2" | 12 | WASHER | RONDELLE<br>RONDELLA | SCHEIBE<br>ARANDELA |
| 3 | 704858 | 1 1/2"-13 | 4 | LOCKNUT | ECROU FREIN<br>AUTOBLOCCANTE | SICHERUNGSMUTTER<br>CONTRATUERCA |
| 4* | 70913744 | 1 1/2"-13 | 8 | NUT UNC | ECROU UNC<br>DADO UNC | MUTTER UNC<br>TUERCA UNC |
| 5 | 70921024 | 1 1/2"-13 X 2 | 4 | BOLT UNC | BOULON UNC<br>BULLONE UNC | MASCH.SCHRB.UNC<br>PERNO UNC |
| 6 | 271276 | 1 | 4 | SPRING | RESSORT<br>MOLLA | FEDER<br>MUELLE |
| 7 | 700149003 | 1 | 4 | INSERT | DOUILLE<br>INSERTO | EINSATZSTUECK<br>INSERCION |
| 8 | 853839 | 1 | 4 | EYE BOLT | BOULON A OEIL<br>BULLONE A OCCHIO | AUGENSCHRAUBE<br>ARMELLA |
| 9 | 70923320 | 1 1/2"-13 X 3 | 4 | BOLT UNC | BOULON UNC<br>BULLONE UNC | MASCH.SCHRB.UNC<br>PERNO UNC |
| 10 | 6379820 | 1 | 4 | WASHER | RONDELLE<br>RONDELLA | SCHEIBE<br>ARANDELA |
| 11 | 354080X1 | 1 3/16" X 1-1/4 | 4 | SPLIT PIN | GOUPILLE FENDUE<br>COPIGLIA | SPALTBOLZEN<br>PASADOR HENDIDO |

**Open-Coil Spring**
**Ressort De Pression**
**Druckfeder**
**Molla Di Pressione**
**Resorte De Compresión**

# 80-65

**Heavy Duty**
**Modèle Renforcé**
**Verstaerkte Ausfuehrung**
**Modello Rinforzato**
**Modelo Reforzado**

5-PL49-001-B

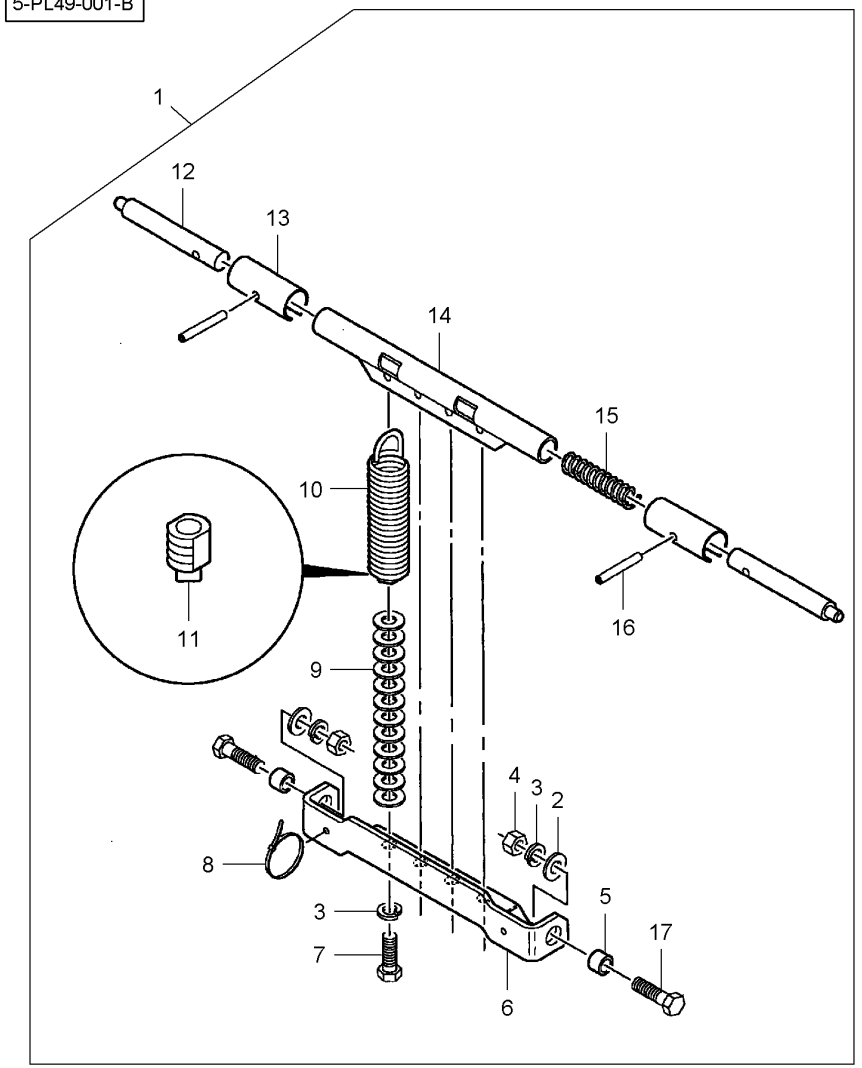


| | | | | | | |
|---|---|---|---|---|---|---|
| 1 | 6000588 | | **1** | KIT, ATTACHMENT | JEU ACCESSOIRES<br>KIT ACCESSORI | SATZ ANBAUTEILE<br>JUEGO ACCESORIO |
| 2 | Y705624 | 1 1/2" | **2** | WASHER | RONDELLE<br>RONDELLA | SCHEIBE<br>ARANDELA |
| 3* | 353439X1 | 1 1/2" | **6** | LOCK WASHER | RONDELLE FREIN<br>RONDELLA ARRESTO | SICHERUNGSRING<br>ARANDELA SEGURID |
| 4 | 375098X1 | 1 1/2"-13 | **2** | NUT UNC | ECROU UNC<br>DADO UNC | MUTTER UNC<br>TUERCA UNC |
| 5 | 700149042 | 1 | **2** | SPACER | ENTRETOISE<br>DISTANZIALE | ABSTANDSTUECK<br>DISCO ESPACIADOR |
| 6 | 700156164 | 1 | **1** | SHANK | ANGLE<br>FUSO | SCHAFT<br>MANGO. |
| 7 | 701235 | 1 1/2"-13 X 1-1/2 | **4** | BOLT UNC | BOULON UNC<br>BULLONE UNC | MASCH.SCHRB.UNC<br>PERNO UNC |
| 8 | **70925094** | 1 | **1** | CABLE TIE | ATTACHE CABLE<br>FASCETTA CAVI | KABELBINDER<br>APRIETACABLES |
| 9 | 70937461 | 1 | **48** | WASHER | RONDELLE<br>RONDELLA | SCHEIBE<br>ARANDELA |
| 10 | 852800 | 1 | **4** | SPRING | RESSORT<br>MOLLA | FEDER<br>MUELLE |
| 11 | 700149003 | 1 | **4** | INSERT | DOUILLE<br>INSERTO | EINSATZSTUECK<br>INSERCION |
| 12 | 852170 | 1 | **2** | PIN | GOUPILLE<br>COPPIGLIA | STIFT<br>PASADOR |
| 13 | 851381 | 1 | **2** | SHIELD | TOLE<br>RIPARO | SCHILD<br>BLINDAJE |
| 14 | 852185 | 1 | **1** | TUBE | TUBE<br>TUBO. | ROHR<br>TUBO. |
| 15 | N17595 | 1 | **1** | SPRING | RESSORT<br>MOLLA | FEDER<br>MUELLE |
| 16 | W933237-3 | 1 5/16" X 3-1/4 | **2** | ROLL PIN | GOUPILLE ROULEE<br>SPINA ELASTICA | SPANNHUELSE<br>PASADOR ELASTICO |
| 17 | 70919089 | 1 1/2"-13 X 1-3/4 | **2** | BOLT UNC | BOULON UNC<br>BULLONE UNC | MASCH.SCHRB.UNC<br>PERNO UNC |

**Spring Tooth Incorporator**
**Support De Dents**
**Zähnen Träger**
**Supporto Di Denti**
**Soporte De Dientes**

**80-70**

5-PL50-001-B

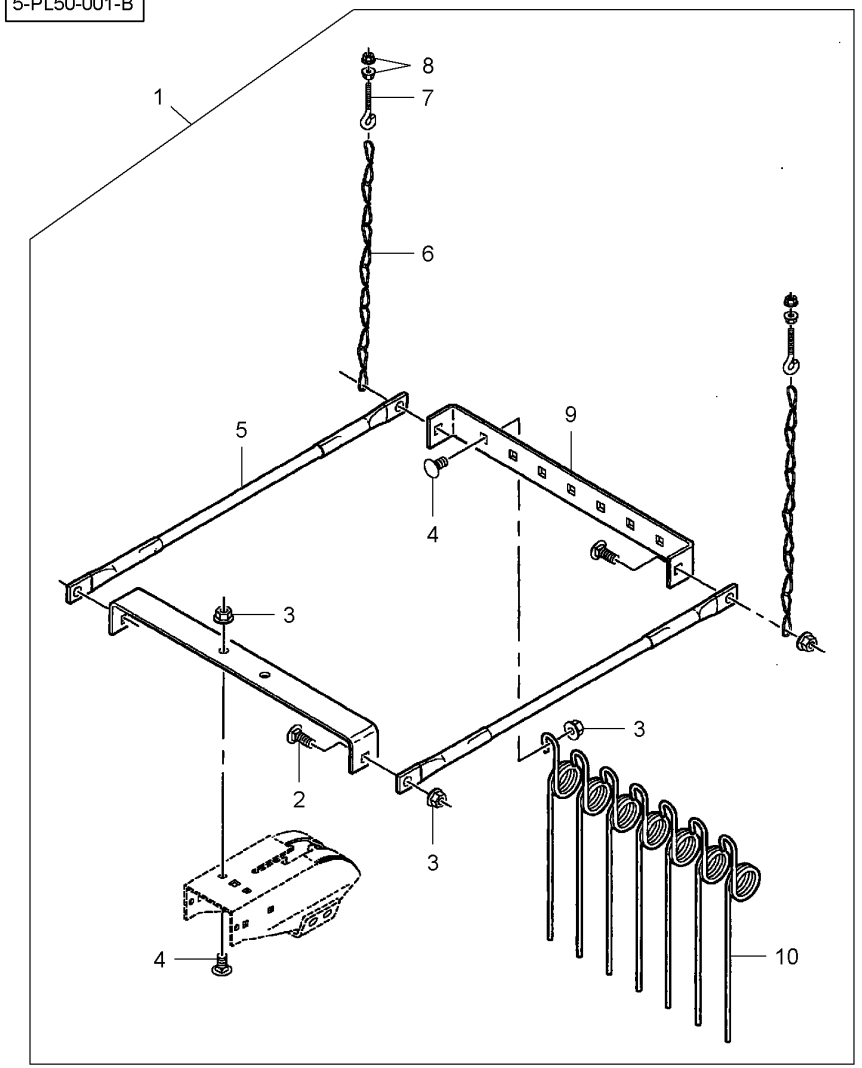


| | | | | | | |
|---|---|---|---|---|---|---|
| 1 | 9000036 | | **1** | KIT, ATTACHMENT | JEU ACCESSOIRES<br>KIT ACCESSORI | SATZ ANBAUTEILE<br>JUEGO ACCESORIO |
| 2 | **70922786** | 1 3/8"-16 X 1 | **4** | BOLT UNC | BOULON UNC<br>BULLONE UNC | MASCH.SCHRB.UNC<br>PERNO UNC |
| 3 | **Y704734** | 1 3/8"-16 | **13** | LOCKNUT | ECROU FREIN<br>AUTOBLOCCANTE | SICHERUNGSMUTTER<br>CONTRATUERCA |
| 4 | 70922784 | 1 3/8"-16 X 3/4 | **9** | BOLT UNC | BOULON UNC<br>BULLONE UNC | MASCH.SCHRB.UNC<br>PERNO UNC |
| 5 | 852189 | 1 | **2** | CABLE | CABLE<br>CAVO | KABEL<br>CABLE |
| 6 | C3305-1 | 1 | **2** | CHAIN | CHAINE<br>CATENA | KETTE<br>CADENA |
| 7 | CD2460 | 1 1/4"-20 | **2** | EYE BOLT | BOULON A OEIL<br>BULLONE A OCCHIO | AUGENSCHRAUBE<br>ARMELLA |
| 8 | 1703354 | 1 1/4"-20 | **4** | NUT UNC | ECROU UNC<br>DADO UNC | MUTTER UNC<br>TUERCA UNC |
| 9 | CD1144 | 1 | **1** | BRACKET | SUPPORT FIXATION<br>STAFFETTA | HALTEARM<br>SOPORTE |
| 10 | **CD1145** | 1 | **7** | TOOTH | DENT<br>DENTE | ZAHN<br>DIENTE |

**Plough Coulter**
**Coutre**
**Sech**
**Coltro**
**Cuchilla**

# 80-75

5-PL51-001-B

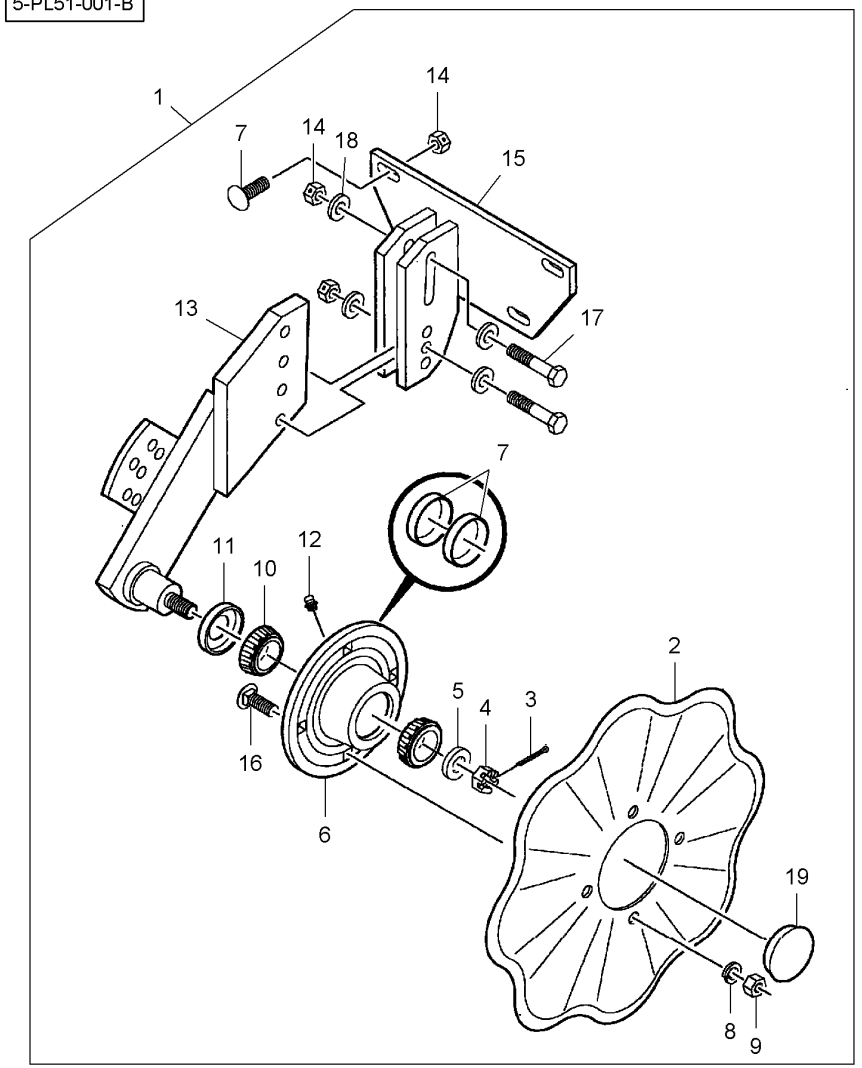


| | | | | | | | |
|---|---|---|---|---|---|---|---|
| 1 | 6000530 | | [A] | **1** | KIT, ATTACHMENT | JEU ACCESSOIRES<br>KIT ACCESSORI | SATZ ANBAUTEILE<br>JUEGO ACCESORIO |
| 1 | 6000531 | | [B] | **1** | KIT, ATTACHMENT | JEU ACCESSOIRES<br>KIT ACCESSORI | SATZ ANBAUTEILE<br>JUEGO ACCESORIO |
| 1 | 6000528 | | [C] | **1** | KIT, ATTACHMENT | JEU ACCESSOIRES<br>KIT ACCESSORI | SATZ ANBAUTEILE<br>JUEGO ACCESORIO |
| 1 | 6000529 | | [D] | **1** | KIT, ATTACHMENT | JEU ACCESSOIRES<br>KIT ACCESSORI | SATZ ANBAUTEILE<br>JUEGO ACCESORIO |
| 2 | N854158 | 1 | [A] | **1** | BLADE | LAME<br>LAMA | KLINGE<br>HOJA CORTANTE |
| 2 | 854086 | 1 | [B] | **1** | BLADE | LAME<br>LAMA | KLINGE<br>HOJA CORTANTE |
| 2 | 854159 | 1 | [C] | **1** | BLADE | LAME<br>LAMA | KLINGE<br>HOJA CORTANTE |
| 2 | 854160 | 1 | [D] | **1** | BLADE | LAME<br>LAMA | KLINGE<br>HOJA CORTANTE |
| 3 | YM2531-102 | 1 | 1/8" X 1-1/4 | **1** | PIN | GOUPILLE<br>COPPIGLIA | STIFT<br>PASADOR |
| 4 | YM2520-469 | 1 | 5/8"-18 | **1** | NUT | ECROU<br>DADO | MUTTER<br>TUERCA |
| 5 | YM2526-449 | 1 | | **1** | WASHER | RONDELLE<br>RONDELLA | SCHEIBE<br>ARANDELA |
| 6 | YM2900-105 | 1 | | **1** | HUB | MOYEU<br>MOZZO | NABE<br>CUBO |
| 7 | YM2550-029 | 6 | | **2** | BEARING CUP | CUVETTE ROULEMNT<br>COPPA CUSCINETTO | LAGERAUSSENRING<br>ANILLO COJINETE |
| 8 | YM2525-352 | 1 | 1/2" | **4** | LOCK WASHER | RONDELLE FREIN<br>RONDELLA ARRESTO | SICHERUNGSRING<br>ARANDELA SEGURID |
| 9 | YM2520-352 | 1 | 1/2"-13 | **4** | NUT | ECROU<br>DADO | MUTTER<br>TUERCA |
| 10 | YM2550-027 | 1 | | **2** | BEARING CONE | CONE ROULEMENT<br>CONO CUSCINETTO | LAGERINNENRING<br>CONO COJINETE |
| 11 | YM2550-115 | 1 | | **1** | SEAL | JOINT ETANCHEITE<br>GIUNTO ROTONDO | DICHTRING<br>JUNTA REDONDA |
| 12 | YM2533-110 | 1 | 1/4"-28 | **1** | UNION | RACCORD<br>RACCORDO | VERSCHRAUBUNG<br>RACOR |
| 13 | YM2960-218 | 1 | | **1** | ARM | BRAS<br>BRACCIO | SCHARHEBEL<br>BRAZO |
| 14 | YM2520-357 | 1 | 1/2"-13 | **5** | NUT | ECROU<br>DADO | MUTTER<br>TUERCA |
| 15 | YM2960-226 | 1 | | **1** | BRACKET | SUPPORT FIXATION<br>STAFFETTA | HALTEARM<br>SOPORTE |
| 16 | YM2502-339 | 1 | 1/2"-13 X 1-1/2 | **7** | SCREW | VIS<br>VITE | SCHRAUBE<br>TORNILLO |
| 17 | YM2502-296 | 1 | 1/2"-13 X 2-1/2 | **2** | SCREW | VIS<br>VITE | SCHRAUBE<br>TORNILLO |
| 18 | YM2526-355 | 1 | | **4** | WASHER | RONDELLE<br>RONDELLA | SCHEIBE<br>ARANDELA |
| 19 | YM2570-375 | 1 | | **1** | DUST SHIELD | CACHE POUSSIERE<br>PARAPOLVERE* | STAUBDECKEL<br>PLACA ANTIPOLVO |

**Plough Coulter**
**Coutre**
**Sech**
**Coltro**
**Cuchilla**

**80-75**

5-PL51-001-B

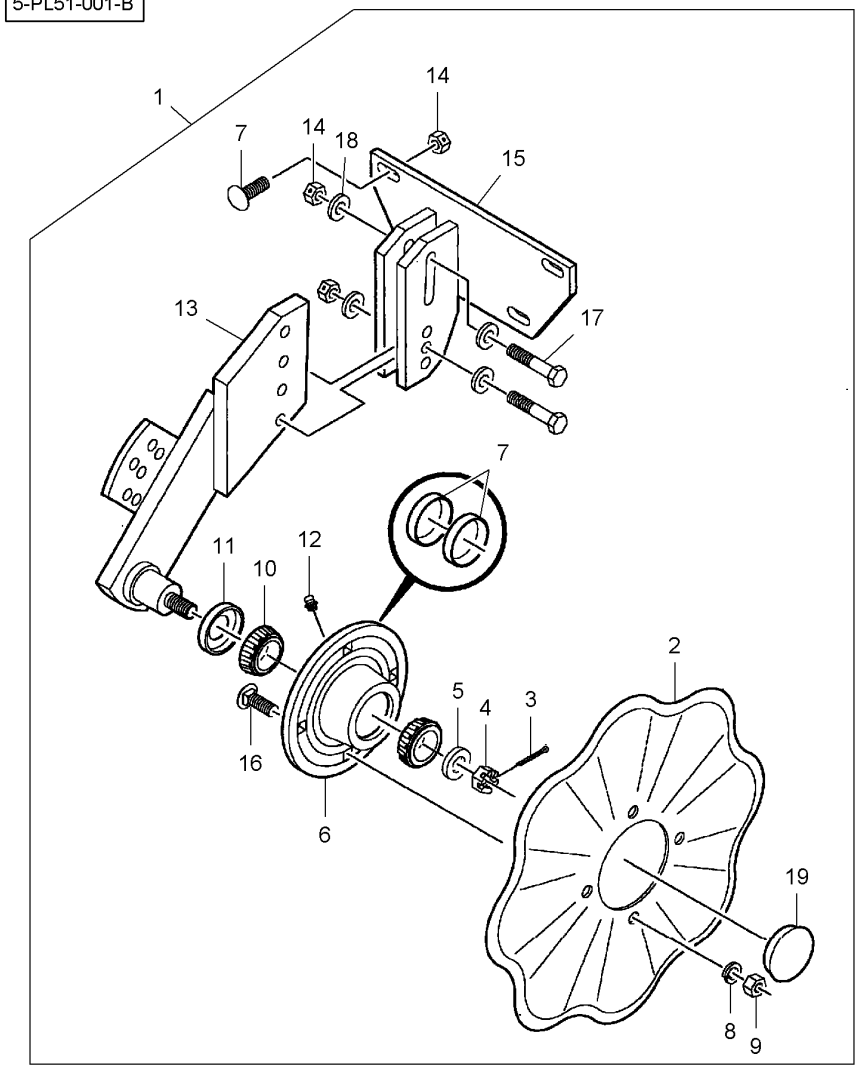


[A] WITH 8 FLUTES BLADE
AVEC LAME 8 RAINURES
MIT 8 RILLEN FRASMESSER
CON LAMA 8 SOLCHI
CON CUCHILLA 8 RANURAS

[B] WITH 13 FLUTES BLADE
AVEC LAME 13 RAINURES
MIT 13 RILLEN FRASMESSER
CON LAMA 13 SOLCHI
CON CUCHILLA 13 RANURAS

[C] WITH BUBBLED BLADE
AVEC LAME BULLE
MIT PERLEFRASMESSER
CON LAMA BOLLA
CON CUCHILLA BURBUJA

[D] WITH SLASHER BLADE
AVEC LAME A DENTS
MIT SÄGEBLATT
CON LAMA A DENTI
CON CUCHILLA CORTADOR

**Plough Coulter**
**Coutre**
**Sech**
**Coltro**
**Cuchilla**

# 80-80

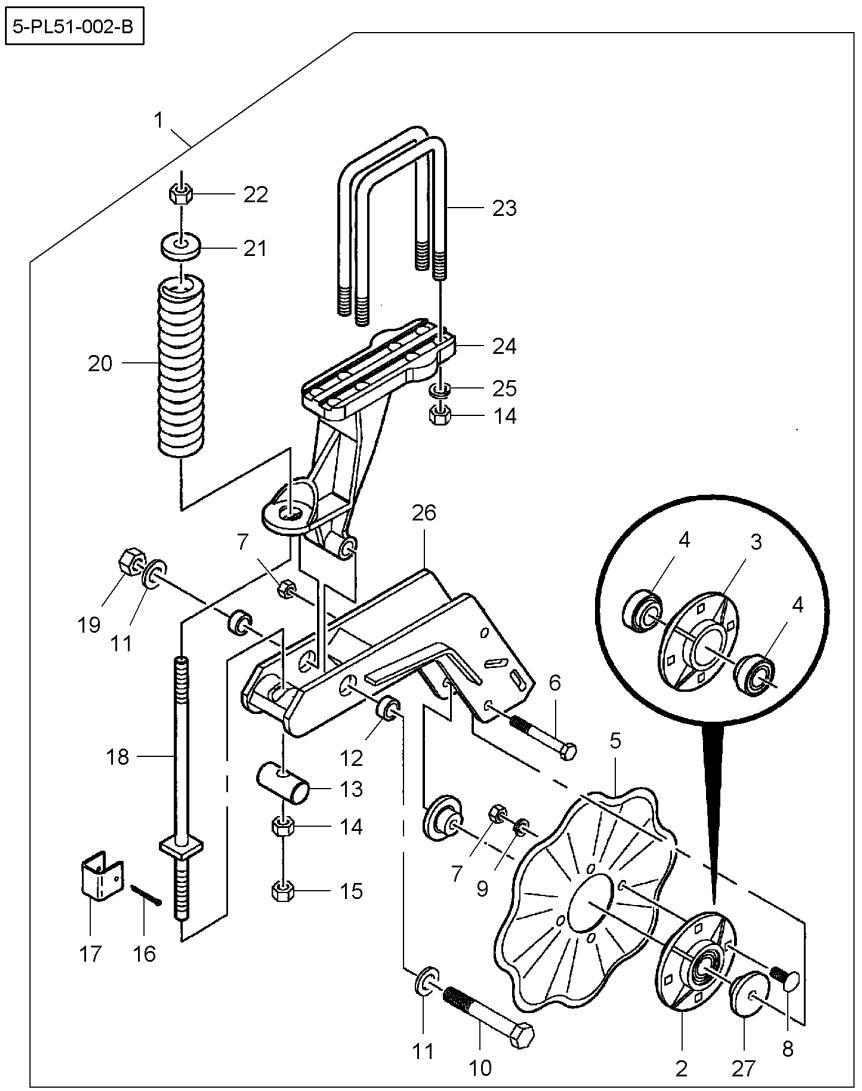


| | | | | | | |
|---|---|---|---|---|---|---|
| 1 | 6000337 | [AB] | **1** | KIT, ATTACHMENT | JEU ACCESSOIRES<br>KIT ACCESSORI | SATZ ANBAUTEILE<br>JUEGO ACCESORIO |
| 1 | 6000335 | [AC] | **1** | KIT, ATTACHMENT | JEU ACCESSOIRES<br>KIT ACCESSORI | SATZ ANBAUTEILE<br>JUEGO ACCESORIO |
| 1 | 6000313 | [DB] | **1** | KIT, ATTACHMENT | JEU ACCESSOIRES<br>KIT ACCESSORI | SATZ ANBAUTEILE<br>JUEGO ACCESORIO |
| 1 | 6000312 | [DC] | **1** | KIT, ATTACHMENT | JEU ACCESSOIRES<br>KIT ACCESSORI | SATZ ANBAUTEILE<br>JUEGO ACCESORIO |
| 1 | 6000338 | [EB] | **1** | KIT, ATTACHMENT | JEU ACCESSOIRES<br>KIT ACCESSORI | SATZ ANBAUTEILE<br>JUEGO ACCESORIO |
| 1 | 6000336 | [EC] | **1** | KIT, ATTACHMENT | JEU ACCESSOIRES<br>KIT ACCESSORI | SATZ ANBAUTEILE<br>JUEGO ACCESORIO |
| 1* | 6000214 | [FB] | **1** | KIT, ATTACHMENT | JEU ACCESSOIRES<br>KIT ACCESSORI | SATZ ANBAUTEILE<br>JUEGO ACCESORIO |
| 1* | 6000139 | [FC] | **1** | KIT, ATTACHMENT | JEU ACCESSOIRES<br>KIT ACCESSORI | SATZ ANBAUTEILE<br>JUEGO ACCESORIO |
| 2 | W248429BS | 1 | **2** | HUB | MOYEU<br>MOZZO | NABE<br>CUBO |
| 3 | W248429B | 2 | **1** | HUB | MOYEU<br>MOZZO | NABE<br>CUBO |
| 4 | **K3538** | 2 | **2** | BALL BEARING | ROULEMENT BILLES<br>CUSCINETTO SFERE | KUGELLAGER<br>COJINETE DE BOLA |
| 5 | 6100110 | 1 [A] | **1** | BLADE | LAME<br>LAMA | KLINGE<br>HOJA CORTANTE |
| 5 | 854086 | 1 [D] | **1** | BLADE | LAME<br>LAMA | KLINGE<br>HOJA CORTANTE |
| 5 | 854159 | 1 [E] | **1** | BLADE | LAME<br>LAMA | KLINGE<br>HOJA CORTANTE |
| 5* | W218169B | 1 [F] | **1** | BLADE | LAME<br>LAMA | KLINGE<br>HOJA CORTANTE |
| 6 | 70926157 | 1 1/2"-13 X 3-3/4 | **1** | BOLT | BOULON<br>BULLONE | BOLZEN<br>BULON |
| 7 | 375098X1 | 1 1/2"-13 | **5** | NUT UNC | ECROU UNC<br>DADO UNC | MUTTER UNC<br>TUERCA UNC |
| 8* | 364224X1 | 1 1/2"-13 X 1-1/4 | **4** | BOLT UNC | BOULON UNC<br>BULLONE UNC | MASCH.SCHRB.UNC<br>PERNO UNC |
| 9* | 353439X1 | 1 1/2" | **4** | LOCK WASHER | RONDELLE FREIN<br>RONDELLA ARRESTO | SICHERUNGSRING<br>ARANDELA SEGURID |
| 10 | 70923126 | 1 3/4"-10 X 5 | **1** | BOLT | BOULON<br>BULLONE | BOLZEN<br>BULON |
| 11 | N12701 | 1 3/4" | **2** | WASHER | RONDELLE<br>RONDELLA | SCHEIBE<br>ARANDELA |
| 12 | W248480B | 1 | **2** | BUSH | BAGUE<br>BOCCOLA | RING<br>CASQUILLO |
| 13 | W248481B | 1 | **1** | TRUNNION | TOURILLON<br>CROCIERA | ZAPFEN<br>PERNO |
| 14 | 70932665 | 1 5/8"-11 | **5** | NUT UNC | ECROU UNC<br>DADO UNC | MUTTER UNC<br>TUERCA UNC |
| 15 | 7774565 | 1 5/8"-11 | **1** | NUT | ECROU<br>DADO | MUTTER<br>TUERCA |
| 16 | W932040-4 | 1 3/16" X 2-1/2 | **1** | PIN | GOUPILLE<br>COPPIGLIA | STIFT<br>PASADOR |

**Plough Coulter**
**Coutre**
**Sech**
**Coltro**
**Cuchilla**

# 80-80

5-PL51-002-B

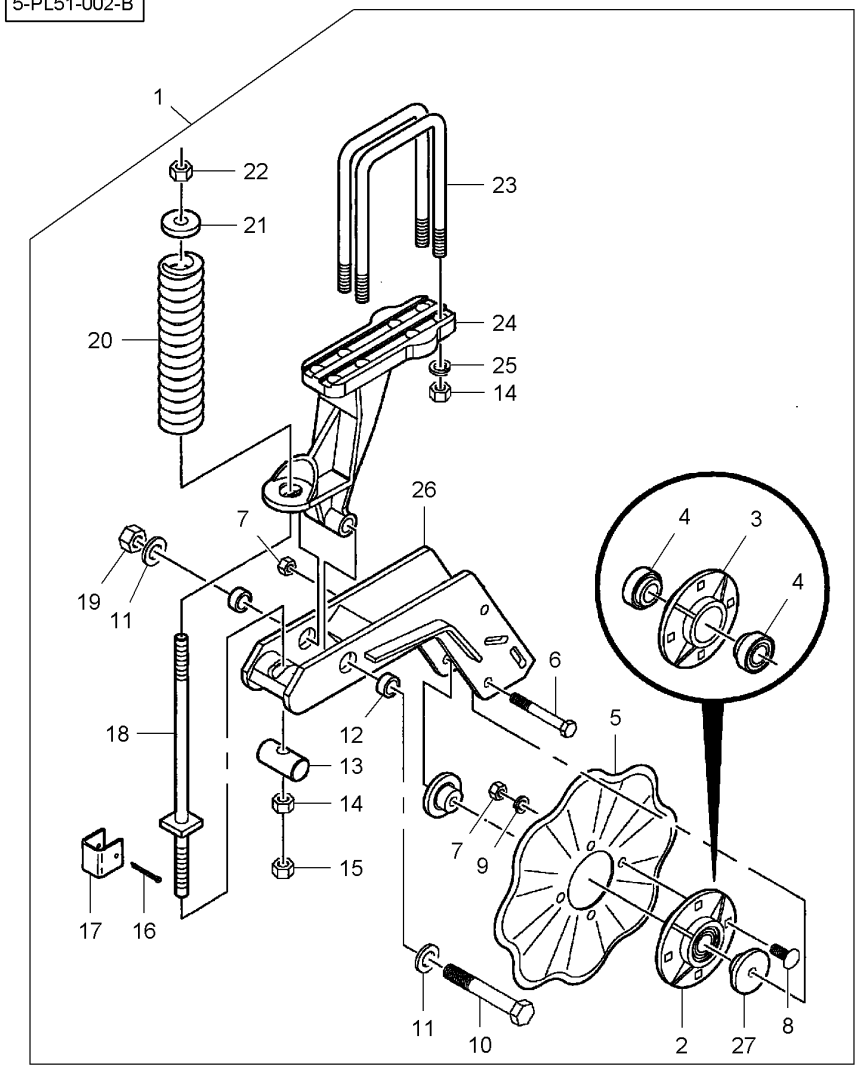


| | | | | | | |
|---|---|---|---|---|---|---|
| 17 | 851574 | 1 | **1** | SPACER | ENTRETOISE<br>DISTANZIALE | ABSTANDSTUECK<br>DISCO ESPACIADOR |
| 18 | 851233 | 1 | **1** | SCREW | VIS<br>VITE | SCHRAUBE<br>TORNILLO |
| 19 | Y704718 | 1 3/4"-10 | **1** | LOCKNUT | ECROU FREIN<br>AUTOBLOCCANTE | SICHERUNGSMUTTER<br>CONTRATUERCA |
| 20 | W246964B | 1 | **1** | SPRING | RESSORT<br>MOLLA | FEDER<br>MUELLE |
| 21 | W219814B | 1 | **1** | WASHER | RONDELLE<br>RONDELLA | SCHEIBE<br>ARANDELA |
| 22 | 72162490 | 1 5/8"-11 | **1** | LOCKNUT | ECROU FREIN<br>AUTOBLOCCANTE | SICHERUNGSMUTTER<br>CONTRATUERCA |
| 23 | W248489B | 1 [B] | **2** | U BOLT | ETRIER FILETE<br>BULLONE A STAFFA | BUEGELSCHRAUBE<br>BRIDA EN U |
| 23 | **W232588B** | 1 [C] | **2** | U BOLT | ETRIER FILETE<br>BULLONE A STAFFA | BUEGELSCHRAUBE<br>BRIDA EN U |
| 24 | N851505 | 1 | **1** | SUPPORT | SUPPORT<br>SOPPORTO | TRAGER<br>SOPORTE |
| 25 | 353433X1 | 1 5/8" | **4** | LOCK WASHER | RONDELLE FREIN<br>RONDELLA ARRESTO | SICHERUNGSRING<br>ARANDELA SEGURID |
| 26 | W248476B | 1 | **1** | ARM | BRAS<br>BRACCIO | SCHARHEBEL<br>BRAZO |
| 27 | W248483B | 1 | **2** | SPACER | ENTRETOISE<br>DISTANZIALE | ABSTANDSTUECK<br>DISCO ESPACIADOR |

[A] WITH 8 FLUTES BLADE
AVEC LAME 8 RAINURES
MIT 8 RILLEN FRASMESSER
CON LAMA 8 SOLCHI
CON CUCHILLA 8 RANURAS

[B] WITH 5" X 7" FRAME
AVEC BATI 5" X 7"
MIT 5" X 7" RAHMEN
CON TELAIO 5" X 7"
CON BASTIDOR 5" X 7"

[C] WITH 7" X 7" FRAME
AVEC BATI 7" X 7"
MIT 7" X 7" RAHMEN
CON TELAIO 7" X 7"
CON BASTIDOR 7" X 7"

[D] WITH 13 FLUTES BLADE
AVEC LAME 13 RAINURES
MIT 13 RILLEN FRASMESSER
CON LAMA 13 SOLCHI
CON CUCHILLA 13 RANURAS

[E] WITH BUBBLED BLADE
AVEC LAME BULLE
MIT PERLEFRASMESSER
CON LAMA BOLLA
CON CUCHILLA BURBUJA

**Plough Coulter**
**Coutre**
**Sech**
**Coltro**
**Cuchilla**

**80-80**

5-PL51-002-B

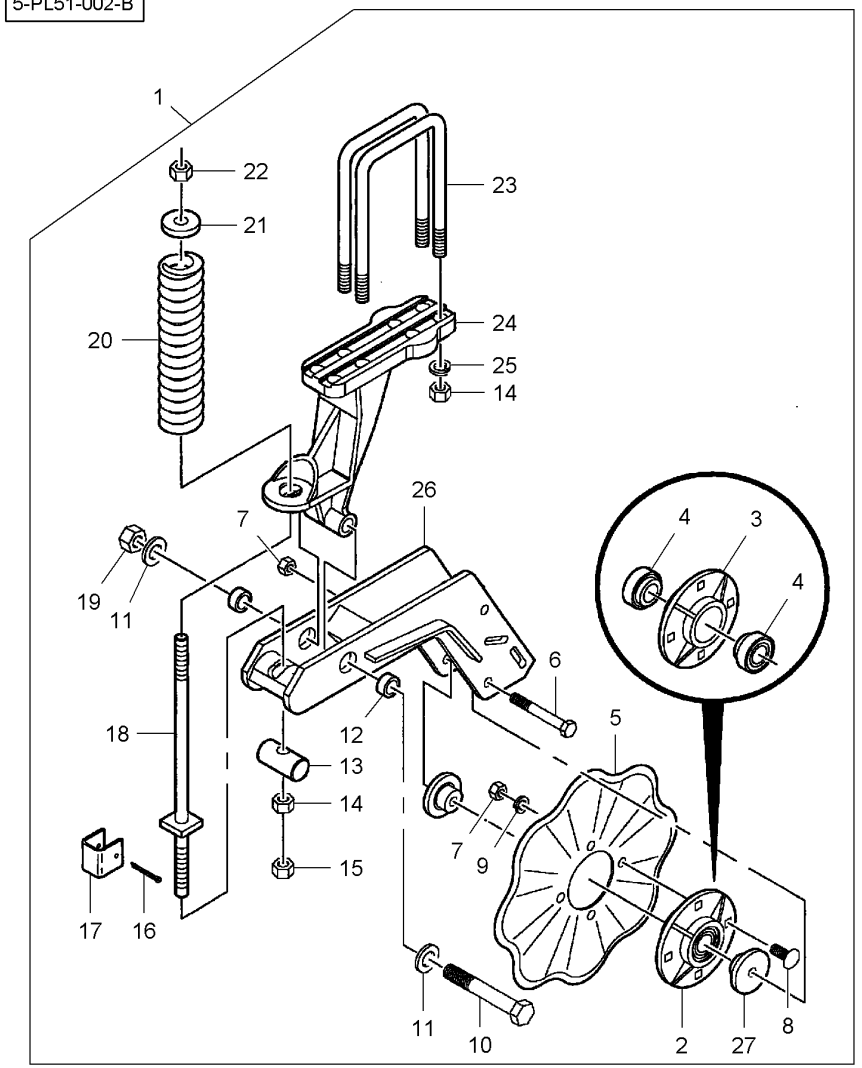


[F] WITH SLASHER BLADE
AVEC LAME A DENTS
MIT SÄGEBLATT
CON LAMA A DENTI
CON CUCHILLA CORTADOR

**Plough Coulter**
**Coutre**
**Sech**
**Coltro**
**Cuchilla**

# 80-85

5-PL51-003-B

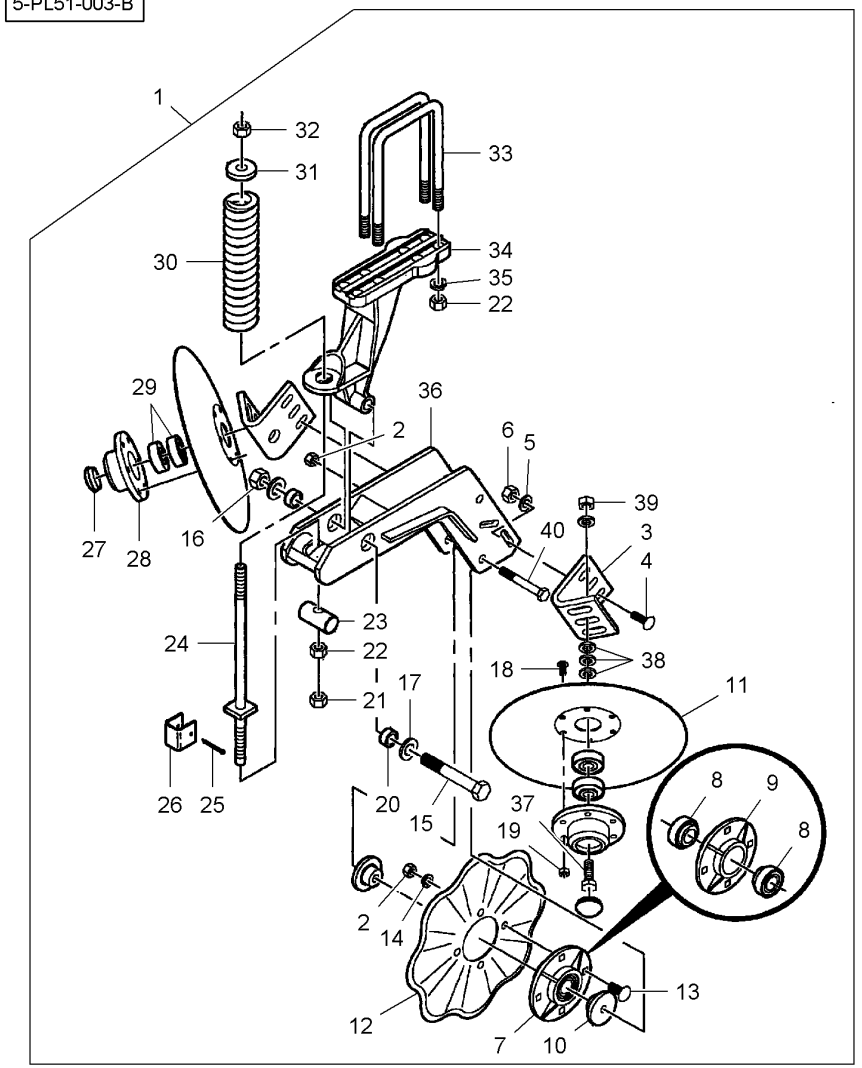


| | | | | | | |
|---|---|---|---|---|---|---|
| 1 | 6000341 | [AB] | **1** | KIT, ATTACHMENT | JEU ACCESSOIRES<br>KIT ACCESSORI | SATZ ANBAUTEILE<br>JUEGO ACCESORIO |
| 1 | 6000339 | [AC] | **1** | KIT, ATTACHMENT | JEU ACCESSOIRES<br>KIT ACCESSORI | SATZ ANBAUTEILE<br>JUEGO ACCESORIO |
| 1 | 6000315 | [DB] | **1** | KIT, ATTACHMENT | JEU ACCESSOIRES<br>KIT ACCESSORI | SATZ ANBAUTEILE<br>JUEGO ACCESORIO |
| 1 | 6000314 | [DC] | **1** | KIT, ATTACHMENT | JEU ACCESSOIRES<br>KIT ACCESSORI | SATZ ANBAUTEILE<br>JUEGO ACCESORIO |
| 1 | 6000235 | [EB] | **1** | KIT, ATTACHMENT | JEU ACCESSOIRES<br>KIT ACCESSORI | SATZ ANBAUTEILE<br>JUEGO ACCESORIO |
| 1 | 6000147 | [EC] | **1** | KIT, ATTACHMENT | JEU ACCESSOIRES<br>KIT ACCESSORI | SATZ ANBAUTEILE<br>JUEGO ACCESORIO |
| 1 | 6000342 | [FB] | **1** | KIT, ATTACHMENT | JEU ACCESSOIRES<br>KIT ACCESSORI | SATZ ANBAUTEILE<br>JUEGO ACCESORIO |
| 1 | 6000340 | [FC] | **1** | KIT, ATTACHMENT | JEU ACCESSOIRES<br>KIT ACCESSORI | SATZ ANBAUTEILE<br>JUEGO ACCESORIO |
| 2 | 375098X1 | 1 1/2"-13 | **5** | NUT UNC | ECROU UNC<br>DADO UNC | MUTTER UNC<br>TUERCA UNC |
| 3 | W248485B | 1 | **2** | BRACKET | SUPPORT FIXATION<br>STAFFETTA | HALTEARM<br>SOPORTE |
| 4 | 70923220 | 1 3/8"-16 X 1-1/4 | **4** | BOLT UNC | BOULON UNC<br>BULLONE UNC | MASCH.SCHRB.UNC<br>PERNO UNC |
| 5 | **K2880** | 1 | **4** | WASHER | RONDELLE<br>RONDELLA | SCHEIBE<br>ARANDELA |
| 6 | 7704141 | 1 3/8"-16 | **4** | LOCKNUT | ECROU FREIN<br>AUTOBLOCCANTE | SICHERUNGSMUTTER<br>CONTRATUERCA |
| 7 | W248429BS | 1 | **1** | HUB | MOYEU<br>MOZZO | NABE<br>CUBO |
| 8 | **K3538** | 2 | **2** | BALL BEARING | ROULEMENT BILLES<br>CUSCINETTO SFERE | KUGELLAGER<br>COJINETE DE BOLA |
| 9 | W248429B | 2 | **1** | HUB | MOYEU<br>MOZZO | NABE<br>CUBO |
| 10 | W248483B | 1 | **2** | SPACER | ENTRETOISE<br>DISTANZIALE | ABSTANDSTUECK<br>DISCO ESPACIADOR |
| 11 | W248484B | 1 | **2** | DISC | DISQUE<br>DISCO | SCHEIBE<br>DISCO |
| 12 | N854158 | 1 [A] | **1** | BLADE | LAME<br>LAMA | KLINGE<br>HOJA CORTANTE |
| 12 | 854086 | 1 [D] | **1** | BLADE | LAME<br>LAMA | KLINGE<br>HOJA CORTANTE |
| 12 | W218169B | 1 [E] | **1** | BLADE | LAME<br>LAMA | KLINGE<br>HOJA CORTANTE |
| 12 | N854158 | 1 [F] | **1** | BLADE | LAME<br>LAMA | KLINGE<br>HOJA CORTANTE |
| 13* | 68619 | 1 1/2"-13 X 1-1/4 | **4** | BOLT UNC | BOULON UNC<br>BULLONE UNC | MASCH.SCHRB.UNC<br>PERNO UNC |
| 14* | Y705046 | 1 1/2" | **4** | LOCK WASHER | RONDELLE FREIN<br>RONDELLA ARRESTO | SICHERUNGSRING<br>ARANDELA SEGURID |
| 15 | 70923126 | 1 3/4"-10 X 5 | **1** | BOLT | BOULON<br>BULLONE | BOLZEN<br>BULON |
| 16 | Y704718 | 1 3/4"-10 | **1** | LOCKNUT | ECROU FREIN<br>AUTOBLOCCANTE | SICHERUNGSMUTTER<br>CONTRATUERCA |

**Plough Coulter**
**Coutre**
**Sech**
**Coltro**
**Cuchilla**

**80-85**

5-PL51-003-B

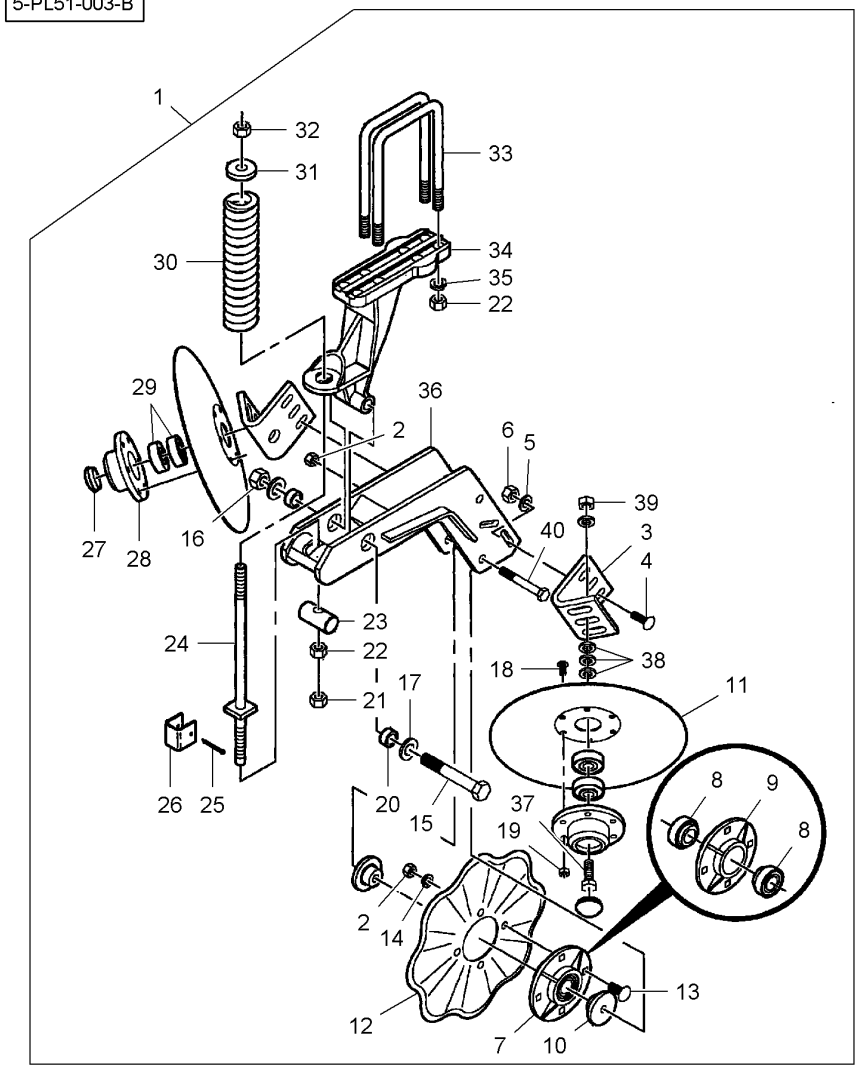


| | | | | | | |
|---|---|---|---|---|---|---|
| 17 | N12701 | 1 | 3/4" | **2** | WASHER | RONDELLE<br>RONDELLA | SCHEIBE<br>ARANDELA |
| 18 | 70918249 | 1 | 5/16"-18 X 3/4 | **12** | SCREW | VIS<br>VITE | SCHRAUBE<br>TORNILLO |
| 19 | **70917372** | 1 | 5/16"-18 | **12** | NUT | ECROU<br>DADO | MUTTER<br>TUERCA |
| 20 | W248480B | 1 | | **2** | BUSH | BAGUE<br>BOCCOLA | RING<br>CASQUILLO |
| 21 | 7774565 | 1 | 5/8"-11 | **1** | NUT | ECROU<br>DADO | MUTTER<br>TUERCA |
| 22 | 70932665 | 1 | 5/8"-11 | **5** | NUT UNC | ECROU UNC<br>DADO UNC | MUTTER UNC<br>TUERCA UNC |
| 23 | W248481B | 1 | | **1** | TRUNNION | TOURILLON<br>CROCIERA | ZAPFEN<br>PERNO |
| 24 | 851233 | 1 | | **1** | SCREW | VIS<br>VITE | SCHRAUBE<br>TORNILLO |
| 25 | W932040-4 | 1 | 3/16" X 2-1/2 | **1** | PIN | GOUPILLE<br>COPPIGLIA | STIFT<br>PASADOR |
| 26 | 851574 | 1 | | **1** | SPACER | ENTRETOISE<br>DISTANZIALE | ABSTANDSTUECK<br>DISCO ESPACIADOR |
| 27 | **W247165B** | 1 | | **2** | CAP | CHAPEAU<br>CAPUCHON | KAPPE<br>TAPA |
| 28 | **W248424B** | 1 | | **2** | HUB | MOYEU<br>MOZZO | NABE<br>CUBO |
| 29 | **W247167B** | 1 | | **4** | BEARING ASSY | ROULEMENT<br>CUSCINETTO COMPL | RADIALLAGER<br>RODAMIENTO RAD |
| 30 | W246964B | 1 | | **1** | SPRING | RESSORT<br>MOLLA | FEDER<br>MUELLE |
| 31 | W219814B | 1 | | **1** | WASHER | RONDELLE<br>RONDELLA | SCHEIBE<br>ARANDELA |
| 32 | 72162490 | 1 | 5/8"-11 | **1** | LOCKNUT | ECROU FREIN<br>AUTOBLOCCANTE | SICHERUNGSMUTTER<br>CONTRATUERCA |
| 33 | W248489B | 1 | [B] | **2** | U BOLT | ETRIER FILETE<br>BULLONE A STAFFA | BUEGELSCHRAUBE<br>BRIDA EN U |
| 33 | **W232588B** | 1 | [C] | **2** | U BOLT | ETRIER FILETE<br>BULLONE A STAFFA | BUEGELSCHRAUBE<br>BRIDA EN U |
| 34 | N851505 | 1 | | **1** | SUPPORT | SUPPORT<br>SOPPORTO | TRAGER<br>SOPORTE |
| 35 | 353433X1 | 1 | 5/8" | **4** | LOCK WASHER | RONDELLE FREIN<br>RONDELLA ARRESTO | SICHERUNGSRING<br>ARANDELA SEGURID |
| 36 | W248476B | 1 | | **1** | ARM | BRAS<br>BRACCIO | SCHARHEBEL<br>BRAZO |
| 37 | 369275X1 | 1 | 5/8"-11 X 2-3/4 | **2** | BOLT UNC | BOULON UNC<br>BULLONE UNC | MASCH.SCHRB.UNC<br>PERNO UNC |
| 38 | 70918268 | 1 | 5/8" | **8** | FLAT WASHER | RONDELLE PLATE<br>RONDELLE PIANA | UNTERLEGSCHEIBEN<br>ARANDELA PLANA |
| 39 | 70926937 | 1 | 5/8"-11 | **2** | LOCKNUT | ECROU FREIN<br>AUTOBLOCCANTE | SICHERUNGSMUTTER<br>CONTRATUERCA |
| 40 | 70926157 | 1 | 1/2"-13 X 3-3/4 | **1** | BOLT | BOULON<br>BULLONE | BOLZEN<br>BULON |

**Plough Coulter**
**Coutre**
**Sech**
**Coltro**
**Cuchilla**

**80-85**

5-PL51-003-B

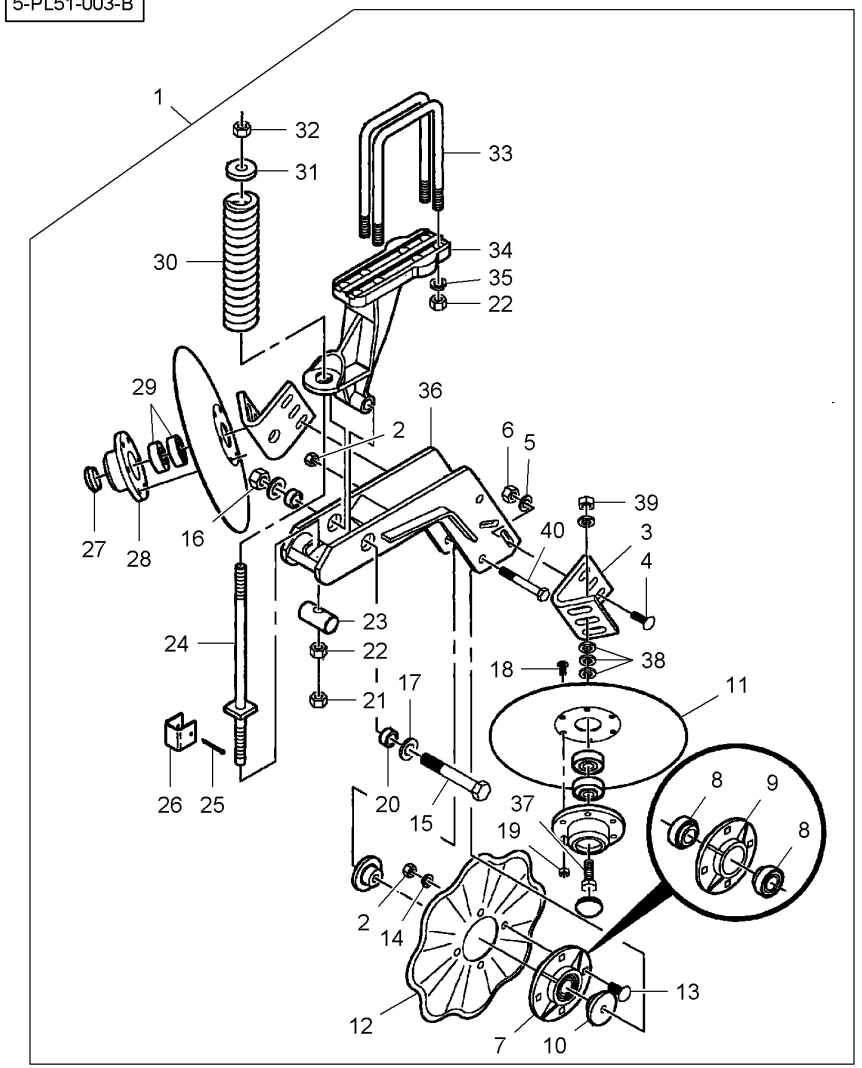


[A] WITH 8 FLUTES BLADE
AVEC LAME 8 RAINURES
MIT 8 RILLEN FRASMESSER
CON LAMA 8 SOLCHI
CON CUCHILLA 8 RANURAS

[B] WITH 5" X 7" FRAME
AVEC BATI 5" X 7"
MIT 5" X 7" RAHMEN
CON TELAIO 5" X 7"
CON BASTIDOR 5" X 7"

[C] WITH 7" X 7" FRAME
AVEC BATI 7" X 7"
MIT 7" X 7" RAHMEN
CON TELAIO 7" X 7"
CON BASTIDOR 7" X 7"

[D] WITH 13 FLUTES BLADE
AVEC LAME 13 RAINURES
MIT 13 RILLEN FRASMESSER
CON LAMA 13 SOLCHI
CON CUCHILLA 13 RANURAS

[E] WITH SLASHER BLADE
AVEC LAME A DENTS
MIT SÄGEBLATT
CON LAMA A DENTI
CON CUCHILLA CORTADOR

[F] WITH BUBBLED BLADE
AVEC LAME BULLE
MIT PERLEFRASMESSER
CON LAMA BOLLA
CON CUCHILLA BURBUJA

| Plough Coulter<br>Coutre<br>Sech<br>Coltro<br>Cuchilla | 80-90 | With 13 Flutes Blade<br>Avec Lame 13 Rainures<br>Mit 13 Rillen Frasmesser<br>Con Lama 13 Solchi<br>Con Cuchilla 13 Ranuras |
|---|---|---|

5-PL51-004-A

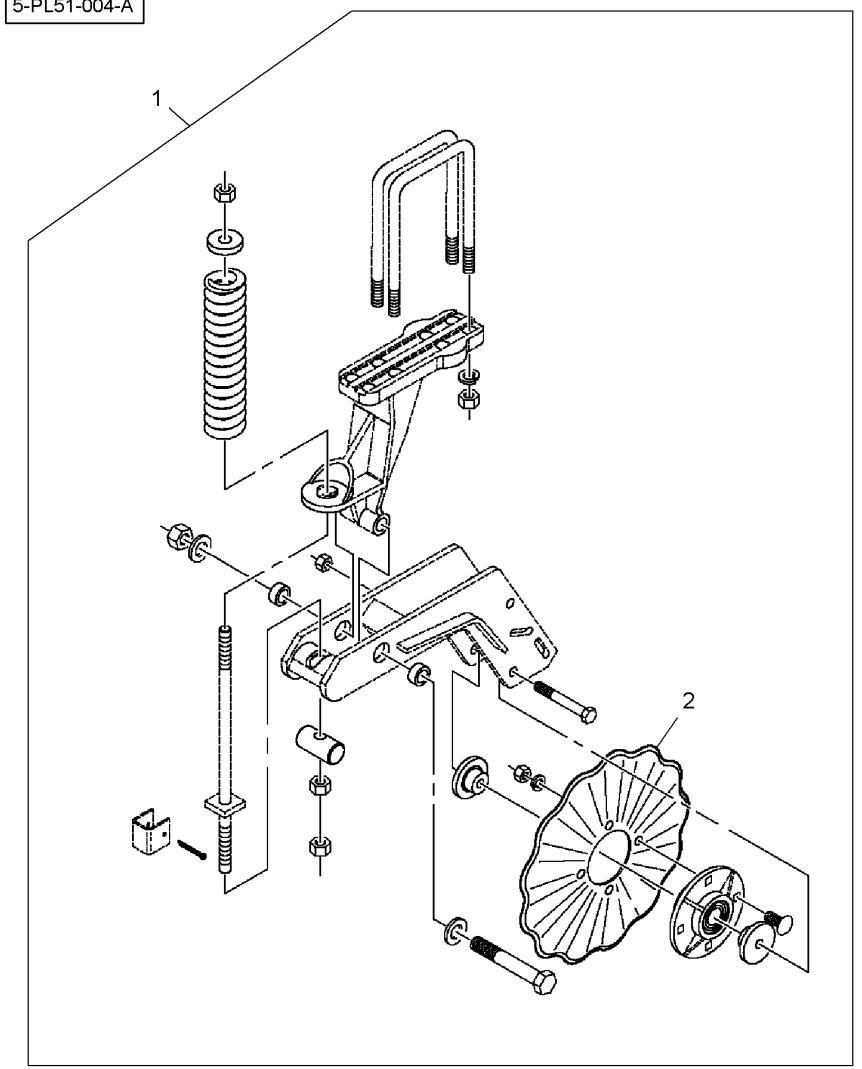


| | | | | | |
|---|---|---|---|---|---|
| 1* | 6100102 | | **1** | KIT, ATTACHMENT | JEU ACCESSOIRES<br>KIT ACCESSORI<br>SATZ ANBAUTEILE<br>JUEGO ACCESORIO |
| 2* | 854086 | 1 | **1** | BLADE | LAME<br>LAMA<br>KLINGE<br>HOJA CORTANTE |

| Plough Coulter<br>Coutre<br>Sech<br>Coltro<br>Cuchilla | 80-95 | With Slasher Blade<br>Avec Lame A Dents<br>Mit Sägeblatt<br>Con Lama A Denti<br>Con Cuchilla Cortador |
|---|---|---|

5-PL51-005-A

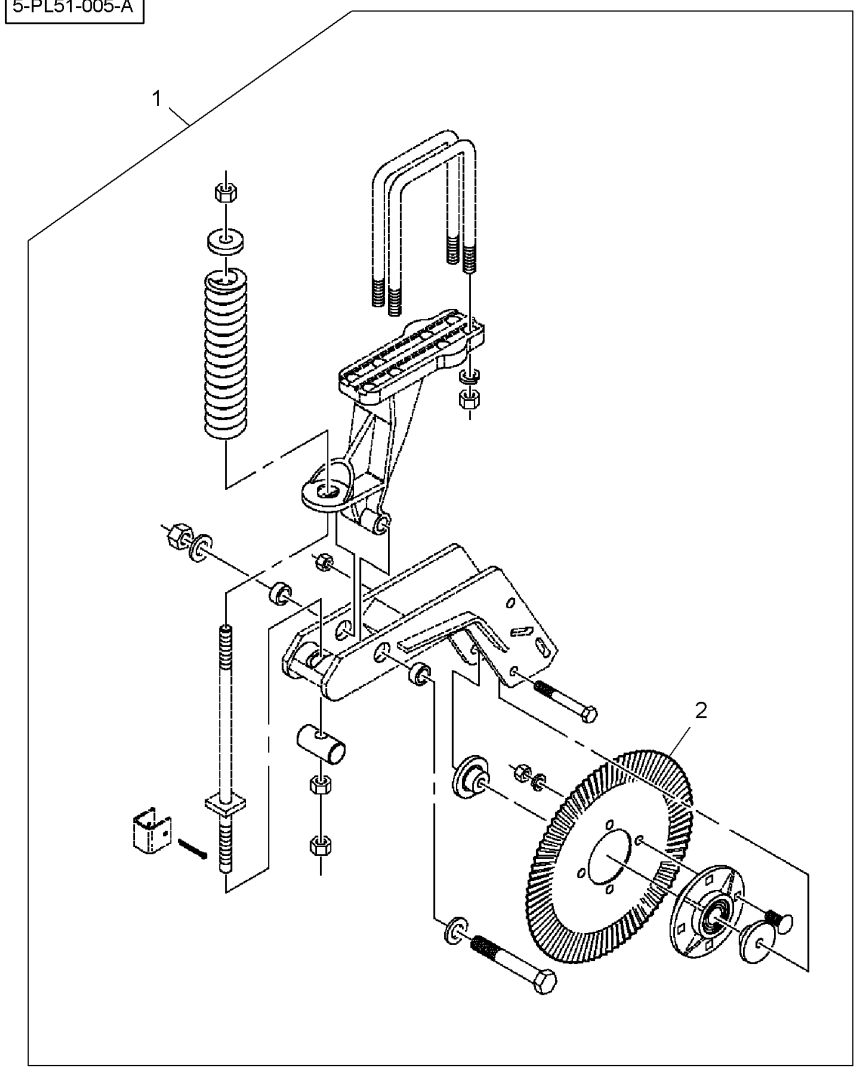


| | | | | | |
|---|---|---|---|---|---|
| 1* | 2087409 | | 1 | KIT, ATTACHMENT | JEU ACCESSOIRES<br>KIT ACCESSORI | SATZ ANBAUTEILE<br>JUEGO ACCESORIO |
| 2* | W218169B | 1 | 1 | BLADE | LAME<br>LAMA | KLINGE<br>HOJA CORTANTE |

**Side Thrust Blade**
**Disque Stabilisateur**
**Stabilisierblatt**
**Lamiera Di Stabilizzazione**
**Placa Estabilizadora**

**80-100**

5-PL52-001-B

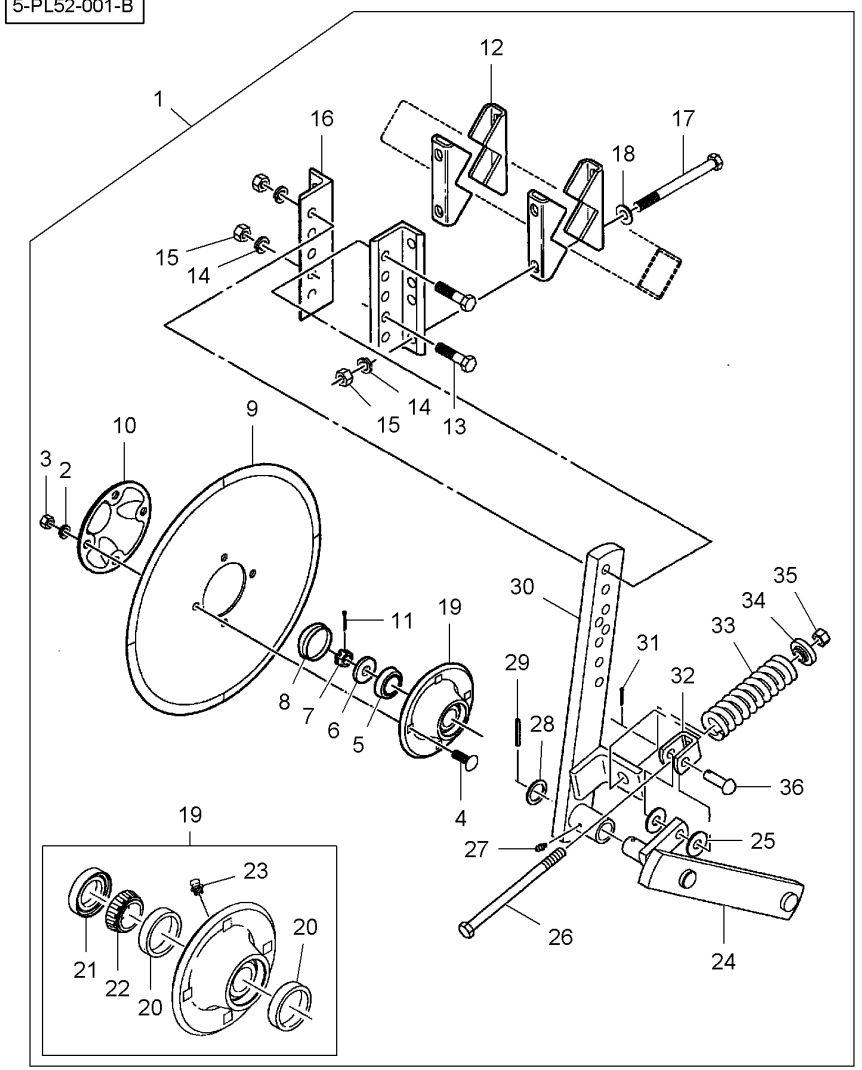


| | | | | | | |
|---|---|---|---|---|---|---|
| 1 | 6000148 | | **1** | KIT, ATTACHMENT | JEU ACCESSOIRES<br>KIT ACCESSORI | SATZ ANBAUTEILE<br>JUEGO ACCESORIO |
| 2* | Y705046 | 1 1/2" | **4** | LOCK WASHER | RONDELLE FREIN<br>RONDELLA ARRESTO | SICHERUNGSRING<br>ARANDELA SEGURID |
| 3 | 375098X1 | 1 1/2"-13 | **4** | NUT UNC | ECROU UNC<br>DADO UNC | MUTTER UNC<br>TUERCA UNC |
| 4* | 364246X1 | 1 1/2"-13 X 1-1/2 | **4** | BOLT UNC | BOULON UNC<br>BULLONE UNC | MASCH.SCHRB.UNC<br>PERNO UNC |
| 5 | **70327382** | 1 | **1** | BEARING CONE | CONE ROULEMENT<br>CONO CUSCINETTO | LAGERINNENRING<br>CONO COJINETE |
| 6 | W239296B | 1 | **1** | WASHER | RONDELLE<br>RONDELLA | SCHEIBE<br>ARANDELA |
| 7* | 70917423 | 1 5/8"-18 | **1** | BOLT UNF | BOULON UNF<br>BULLONE UNF | MASCH.SCHRB.UNF<br>PERNO UNF |
| 8 | W20H4701 | 1 | **1** | CAP | CHAPEAU<br>CAPUCHON | KAPPE<br>TAPA |
| 9 | W217306B | 1 | **1** | DISC | DISQUE<br>DISCO | SCHEIBE<br>DISCO |
| 10 | W219356B | 1 | **1** | PLATE | PLAQUE<br>PIASTRA | PLATTE<br>PLATO |
| 11 | 354061X1 | 1 1/8" X 1-1/4 | **1** | PIN | GOUPILLE<br>COPPIGLIA | STIFT<br>PASADOR |
| 12 | 30-1007696 | 1 | **4** | CLAMP | COLLIER<br>FASCETTA | HALTESCHELLE<br>ABRAZADERA |
| 13 | 353729X1 | 1 5/8"-11 X 2-1/2 | **2** | BOLT UNC | BOULON UNC<br>BULLONE UNC | MASCH.SCHRB.UNC<br>PERNO UNC |
| 14 | 353433X1 | 1 5/8" | **6** | LOCK WASHER | RONDELLE FREIN<br>RONDELLA ARRESTO | SICHERUNGSRING<br>ARANDELA SEGURID |
| 15 | 70932665 | 1 5/8"-11 | **6** | NUT UNC | ECROU UNC<br>DADO UNC | MUTTER UNC<br>TUERCA UNC |
| 16 | W248490B | 1 | **2** | SUPPORT | SUPPORT<br>SOPPORTO | TRAGER<br>SOPORTE |
| 17 | 70926137 | 1 5/8"-11 X 7 | **4** | CAPSCREW | VIS BOUCHON<br>TAPPO A VITE | HUTSCHRAUBE<br>TORNILLO TAPON |
| 18 | 70918268 | 1 5/8" | **4** | FLAT WASHER | RONDELLE PLATE<br>RONDELLE PIANA | UNTERLEGSCHEIBEN<br>ARANDELA PLANA |
| 19 | 851997 | 1 | **1** | HUB | MOYEU<br>MOZZO | NABE<br>CUBO |
| 20 | **70327997** | 19 | **2** | BEARING CUP | CUVETTE ROULEMNT<br>COPPA CUSCINETTO | LAGERAUSSENRING<br>ANILLO COJINETE |
| 21 | W239653BS | 19 | **1** | SEAL | JOINT ETANCHEITE<br>GIUNTO ROTONDO | DICHTRING<br>JUNTA REDONDA |
| 22 | **70327382** | 19 | **1** | BEARING CONE | CONE ROULEMENT<br>CONO CUSCINETTO | LAGERINNENRING<br>CONO COJINETE |
| 23 | 70914465 | 19 1/8"-27 | **1** | GREASE FITTING | GRAISSEUR<br>INGRASSATORE | DRUCKSCHMIERKOPF<br>ENGRASADOR |
| 24 | W220978B | 1 | **1** | ARM | BRAS<br>BRACCIO | SCHARHEBEL<br>BRAZO |
| 25 | 6834402 | 1 | **2** | WASHER | RONDELLE<br>RONDELLA | SCHEIBE<br>ARANDELA |
| 26 | 70934193 | 1 5/8"-11 X 9 | **1** | SCREW | VIS<br>VITE | SCHRAUBE<br>TORNILLO |

**Side Thrust Blade**
**Disque Stabilisateur**
**Stabilisierblatt**
**Lamiera Di Stabilizzazione**
**Placa Estabilizadora**

**80-100**

5-PL52-001-B

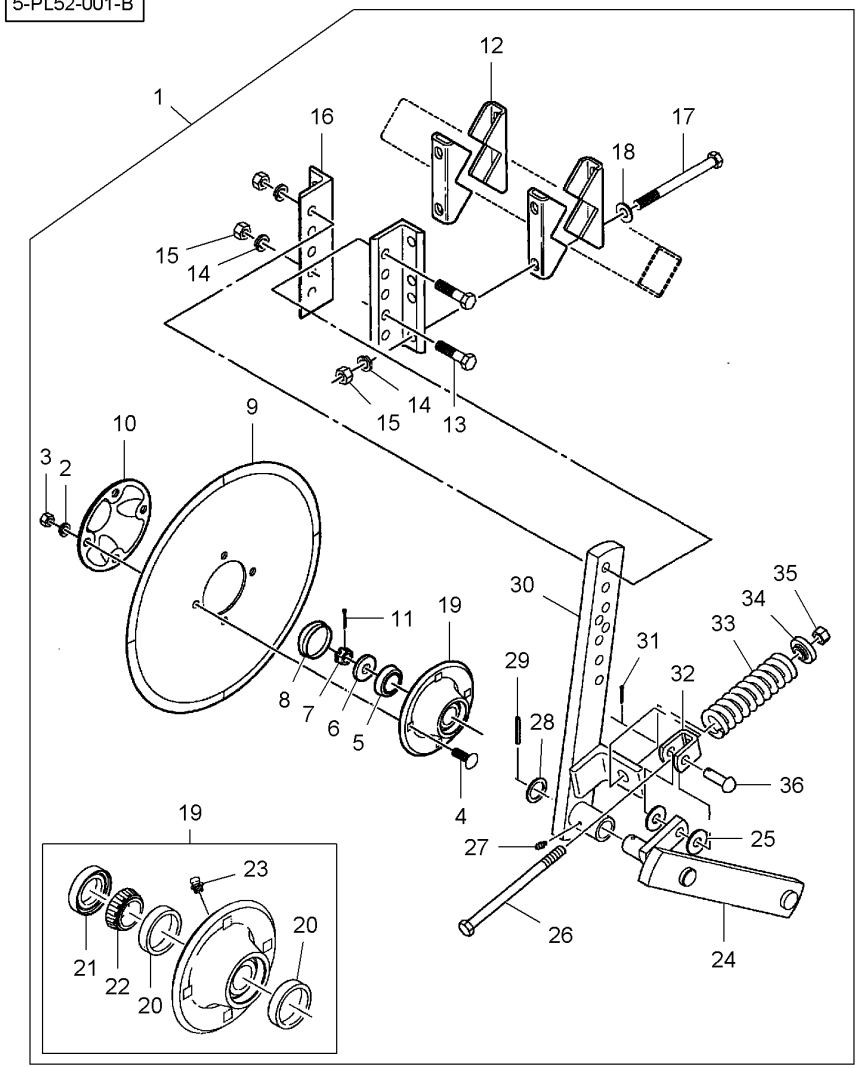


| | | | | | | |
|---|---|---|---|---|---|---|
| 27 | 70914687 | 1 | 1/4"-28 | **1** GREASE FITTING | GRAISSEUR<br>INGRASSATORE | DRUCKSCHMIERKOPF<br>ENGRASADOR |
| 28 | WRP5496 | 1 | | **1** WASHER | RONDELLE<br>RONDELLA | SCHEIBE<br>ARANDELA |
| 29 | 70920449 | 1 | 1/4" X 2 | **1** PIN | GOUPILLE<br>COPPIGLIA | STIFT<br>PASADOR |
| 30 | 30-1008145 | 1 | | **1** ARM | BRAS<br>BRACCIO | SCHARHEBEL<br>BRAZO |
| 31 | 354080X1 | 1 | 3/16" X 1-1/4 | **1** SPLIT PIN | GOUPILLE FENDUE<br>COPIGLIA | SPALTBOLZEN<br>PASADOR HENDIDO |
| 32 | W218438B | 1 | | **1** CLEVIS | CHAPE<br>GANCIO D'ATTACCO | GABELSTUECK<br>GANCHO SEGURI. |
| 33 | W219326B | 1 | | **1** SPRING | RESSORT<br>MOLLA | FEDER<br>MUELLE |
| 34 | W219814B | 1 | | **1** WASHER | RONDELLE<br>RONDELLA | SCHEIBE<br>ARANDELA |
| 35 | 70932665 | 1 | 5/8"-11 | **1** NUT UNC | ECROU UNC<br>DADO UNC | MUTTER UNC<br>TUERCA UNC |
| 36 | W239627B | 1 | 5/8" X 2 | **1** CLEVIS PIN | AXE<br>PERNO D'ATTACCO | SPLINTBOLZEN<br>BULON CILINDRICO |

90

**Lighting**
**Eclairage**
**Beleuchtung**
**Illuminazione**
**Iluminacion**

# 90-5

5-PL68-002-A

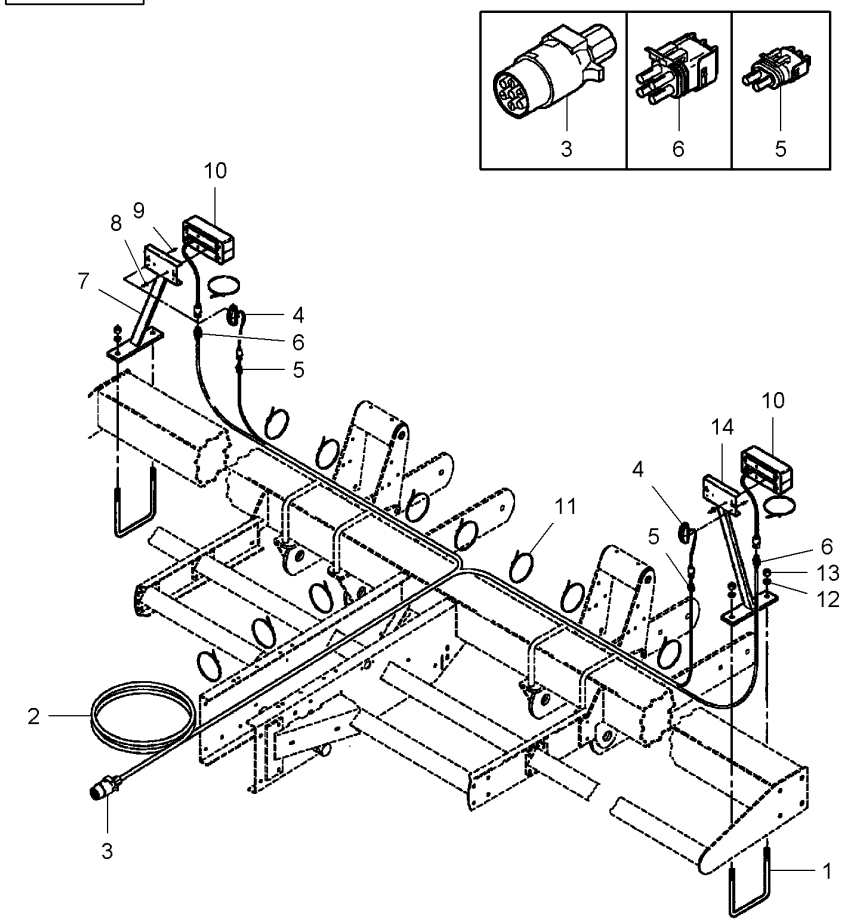


| | | | | | |
|---|---|---|---|---|---|
| 1* | **W232588B** | 5/8"-11 X 7-1/16 | **2** | U BOLT | ETRIER FILETE<br>BULLONE A STAFFA | BUEGELSCHRAUBE<br>BRIDA EN U |
| 2* | 855418 | | **1** | HARNESS | FAISCEAU<br>FASCIOCAVI | KABELBAUM<br>MAZO CABLES |
| 2* | 700714649 | 2 | **1** | PLUG 7 PIN SUP | PRISE MALE 7 BR<br>SPINA DA 7 | STECKER 7P ENTST<br>TOMA 7 ESPIG SUP |
| 2* | 855426 | 2 | **2** | ELECTRICAL PLUG | PRISE ELECT MALE<br>PRESAELETTRICI M | STECKER<br>TOMACORRIENTE M |
| 2* | 700725254 | 2 | **2** | CONNECTOR | BORNE.<br>MORSETTO. | DOPPELNIPPEL<br>CONECTOR |
| 3* | 700714649 | | **X** | PLUG 7 PIN SUP | PRISE MALE 7 BR<br>SPINA DA 7 | STECKER 7P ENTST<br>TOMA 7 ESPIG SUP |
| 4* | 855451 | 90-10 No 1 | **2** | LIGHT | FEU<br>FARO. | LEUCHTE<br>LAMPARA/LUZ |
| 5* | 855426 | | **X** | ELECTRICAL PLUG | PRISE ELECT MALE<br>PRESAELETTRICI M | STECKER<br>TOMACORRIENTE M |
| 6* | 855434 | | **X** | ELECTRICAL PLUG | PRISE ELECT MALE<br>PRESAELETTRICI M | STECKER<br>TOMACORRIENTE M |
| 7* | 855364 | ▶ | **1** | BRACKET | SUPPORT FIXATION<br>STAFFETTA | HALTEARM<br>SOPORTE |
| 8* | 70917380 | No 10 | **4** | WASHER | RONDELLE<br>RONDELLA | SCHEIBE<br>ARANDELA |
| 9* | 70917395 | No 8 | **4** | LOCK WASHER | RONDELLE FREIN<br>RONDELLA ARRESTO | SICHERUNGSRING<br>ARANDELA SEGURID |
| 10* | 700717518 | 90-10 No 3 | **2** | LIGHT | FEU<br>FARO. | LEUCHTE<br>LAMPARA/LUZ |
| 11* | 700717644 | | **X** | CABLE TIE | ATTACHE CABLE<br>FASCETTA CAVI | KABELBINDER<br>APRIETACABLES |
| 12* | 70917373 | 5/8" | **4** | LOCK WASHER | RONDELLE FREIN<br>RONDELLA ARRESTO | SICHERUNGSRING<br>ARANDELA SEGURID |
| 13* | 70932665 | 5/8"-11 | **4** | NUT UNC | ECROU UNC<br>DADO UNC | MUTTER UNC<br>TUERCA UNC |
| 14* | 855363 | ◀ | **1** | BRACKET | SUPPORT FIXATION<br>STAFFETTA | HALTEARM<br>SOPORTE |

**Lighting**
**Eclairage**
**Beleuchtung**
**Illuminazione**
**Iluminacion**

# 90-10

5-PL68-001-B

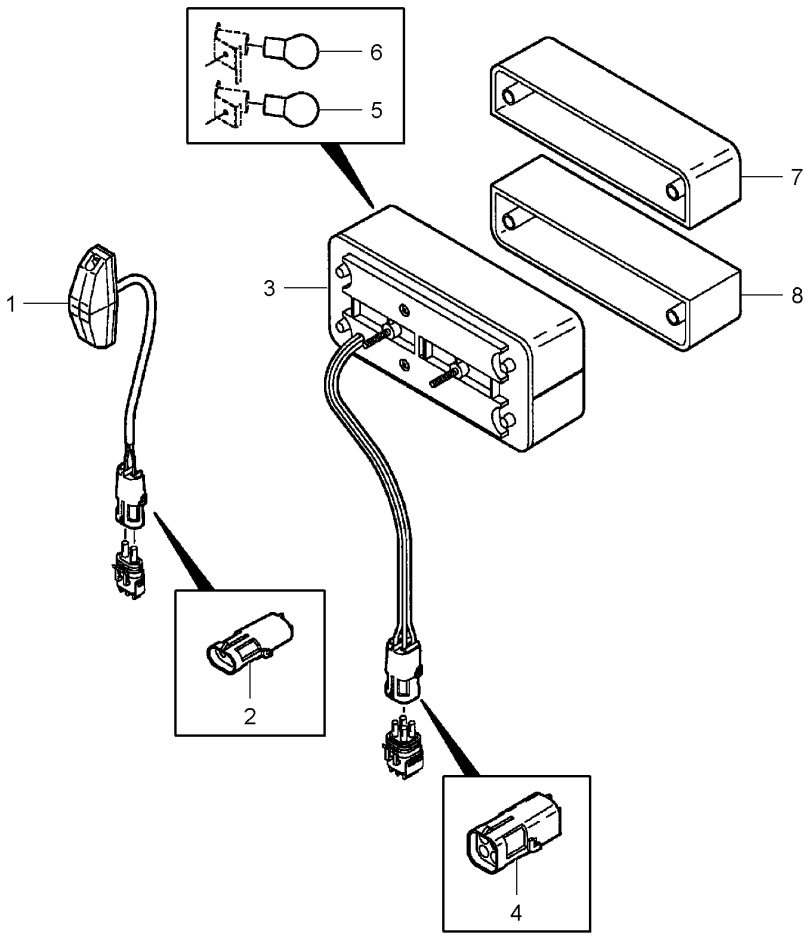


| | | | | | |
|---|---|---|---|---|---|
| 1* | 855451 | | **1** LIGHT | FEU<br>FARO. | LEUCHTE<br>LAMPARA/LUZ |
| 2* | 700708753 | 1 | **1** ELECTRIC SOCKET | PRISE ELEC FEMEL<br>PRESAELETTRIC F | STECKDOSE<br>TOMACORRIENTE F |
| 3* | 700717518 | | **1** LIGHT | FEU<br>FARO. | LEUCHTE<br>LAMPARA/LUZ |
| 4* | 700728336 | 3 | **1** ELECTRIC SOCKET | PRISE ELEC FEMEL<br>PRESAELETTRIC F | STECKDOSE<br>TOMACORRIENTE F |
| 5* | 700717797 | 3 | **1** BULB S/L 21/5W | AMPOULE 21/5W<br>BULBO 21/5W | GLUEHLAMPE 21/5W<br>BOMB C/I 21/5W |
| 6* | 700717796 | 3 | **1** BULB 12V 21W | AMPOULE 12V 21W<br>BULBO 12V 21W | GLUEHL 12V21W<br>BOMB 12V 21W |
| 7* | 700717489 | 3 | **1** LENS | LENTILLE<br>LENTE | LINSE<br>LENTE DE VIDRIO |
| 8* | 700717614 | 3 [A] | **1** LENS | LENTILLE<br>LENTE | LINSE<br>LENTE DE VIDRIO |

[A] RED
ROUGE
ROT
ROSSO
ROJO

| Electronic Sensor Harness<br>Faisceau Capteur<br>Sensor Kabelbaum<br>Fascio Sensore<br>Haz Captador | 90-15 | 3 Row<br>3 Rangs<br>3 Reihes<br>3 Lineas<br>3 Lineas |
|---|---|---|

5-PL17-001-B

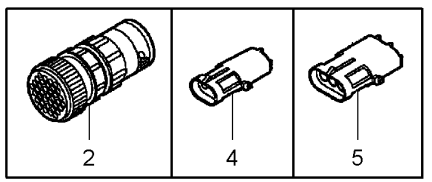


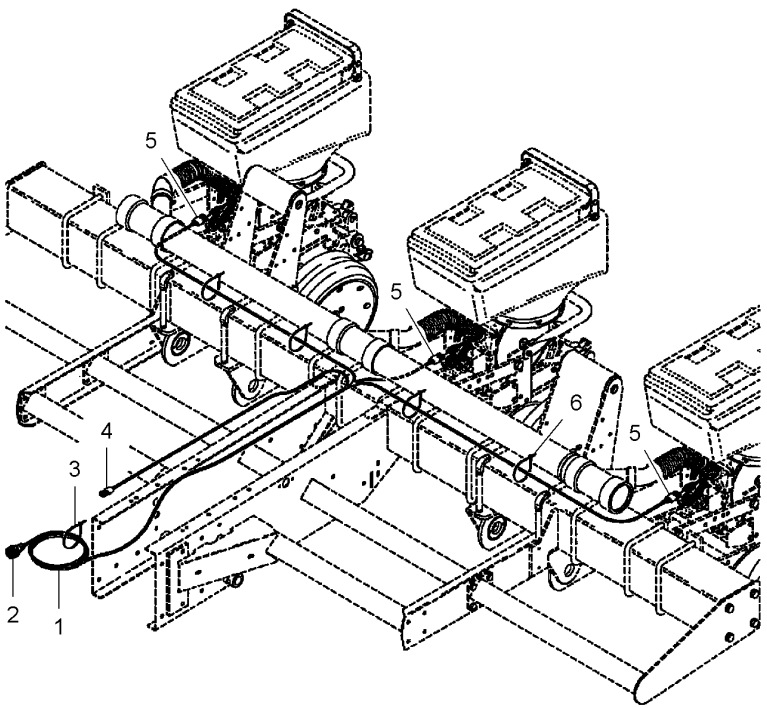


| | | | | | | |
|---|---|---|---|---|---|---|
| 1 | N857319 | [A] | 1 | HARNESS | FAISCEAU<br>FASCIOCAVI | KABELBAUM<br>MAZO CABLES |
| 1 | N857320 | [B] | 1 | HARNESS | FAISCEAU<br>FASCIOCAVI | KABELBAUM<br>MAZO CABLES |
| 1* | 855447 | 1 | 1 | ELECTRIC SOCKET | PRISE ELEC FEMEL<br>PRESAELETTRIC F | STECKDOSE<br>TOMACORRIENTE F |
| 1* | 855425 | 1 | 1 | ELECTRIC SOCKET | PRISE ELEC FEMEL<br>PRESAELETTRIC F | STECKDOSE<br>TOMACORRIENTE F |
| 1* | N855429 | 1 | 3 | ELECTRIC SOCKET | PRISE ELEC FEMEL<br>PRESAELETTRIC F | STECKDOSE<br>TOMACORRIENTE F |
| 2* | 855447 | | X | ELECTRIC SOCKET | PRISE ELEC FEMEL<br>PRESAELETTRIC F | STECKDOSE<br>TOMACORRIENTE F |
| 3* | 7724347 | ◀▶ 11" | X | CABLE TIE | ATTACHE CABLE<br>FASCETTA CAVI | KABELBINDER<br>APRIETACABLES |
| 4* | 855425 | | X | ELECTRIC SOCKET | PRISE ELEC FEMEL<br>PRESAELETTRIC F | STECKDOSE<br>TOMACORRIENTE F |
| 5* | N855429 | | X | ELECTRIC SOCKET | PRISE ELEC FEMEL<br>PRESAELETTRIC F | STECKDOSE<br>TOMACORRIENTE F |
| 6* | 70937133 | ◀▶ 15"-1/4 | X | CABLE TIE | ATTACHE CABLE<br>FASCETTA CAVI | KABELBINDER<br>APRIETACABLES |

[A] 3 ROWS WITH 1,5 M SPACING
3 RANGS AVEC ESPACEMENT 1,5 M
3 REIHE MIT ABSTAND 1,5 M
3 LINEAS CON DISTANZIAMENTO 1,5 M
3 LINEAS CON ESPACIAMIENTO 1,5 M

[B] 3 ROWS WITH 2,3 M SPACING
3 RANGS AVEC ESPACEMENT 2,3 M
3 REIHE MIT ABSTAND 2,3 M
3 LINEAS CON DISTANZIAMENTO 2,3 M
3 LINEAS CON ESPACIAMIENTO 2,3 M

| Electronic Sensor Harness<br>Faisceau Capteur<br>Sensor Kabelbaum<br>Fascio Sensore<br>Haz Captador | 90-20 | 4 Row<br>4 Rangs<br>4 Reihes<br>4 Lineas<br>4 Lineas |
|---|---|---|

5-PL17-002-B

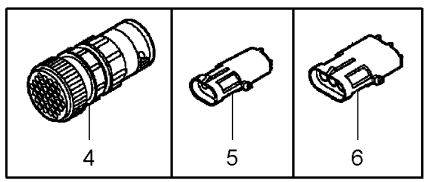


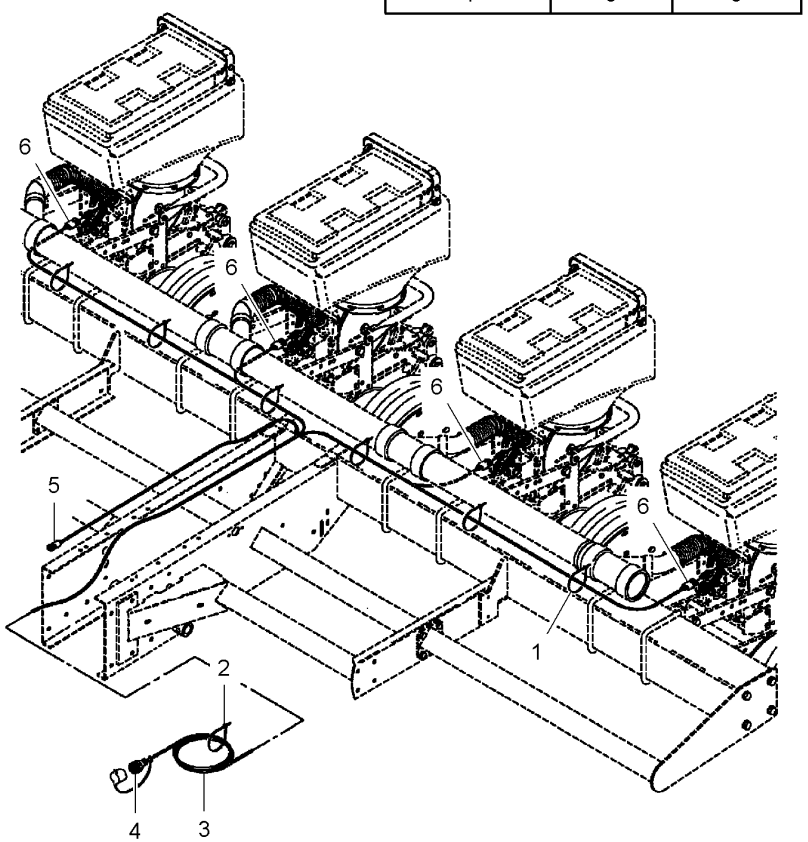


| | | | | | |
|---|---|---|---|---|---|
| 1* | 70937133 | ◀▶ 15"-1/4 | 12 | CABLE TIE | ATTACHE CABLE<br>FASCETTA CAVI | KABELBINDER<br>APRIETACABLES |
| 2* | 7724347 | ◀▶ 11" | 14 | CABLE TIE | ATTACHE CABLE<br>FASCETTA CAVI | KABELBINDER<br>APRIETACABLES |
| 3* | W248510B | | 1 | HARNESS | FAISCEAU<br>FASCIOCAVI | KABELBAUM<br>MAZO CABLES |
| 3* | 855447 | 3 | 1 | ELECTRIC SOCKET | PRISE ELEC FEMEL<br>PRESAELETTRIC F | STECKDOSE<br>TOMACORRIENTE F |
| 3* | 855425 | 3 | 1 | ELECTRIC SOCKET | PRISE ELEC FEMEL<br>PRESAELETTRIC F | STECKDOSE<br>TOMACORRIENTE F |
| 3* | N855429 | 3 | 4 | ELECTRIC SOCKET | PRISE ELEC FEMEL<br>PRESAELETTRIC F | STECKDOSE<br>TOMACORRIENTE F |
| 4* | 855447 | | X | ELECTRIC SOCKET | PRISE ELEC FEMEL<br>PRESAELETTRIC F | STECKDOSE<br>TOMACORRIENTE F |
| 5* | 855425 | | X | ELECTRIC SOCKET | PRISE ELEC FEMEL<br>PRESAELETTRIC F | STECKDOSE<br>TOMACORRIENTE F |
| 6* | N855429 | | X | ELECTRIC SOCKET | PRISE ELEC FEMEL<br>PRESAELETTRIC F | STECKDOSE<br>TOMACORRIENTE F |

| Electronic Sensor Harness<br>Faisceau Capteur<br>Sensor Kabelbaum<br>Fascio Sensore<br>Haz Captador | 90-25 | 6 Row<br>6 Rangs<br>6 Reihes<br>6 Lineas<br>6 Lineas |
|---|---|---|

5-PL17-003-B

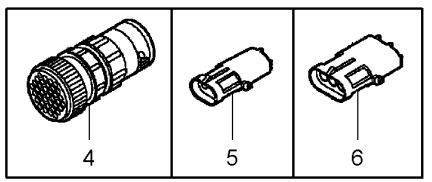


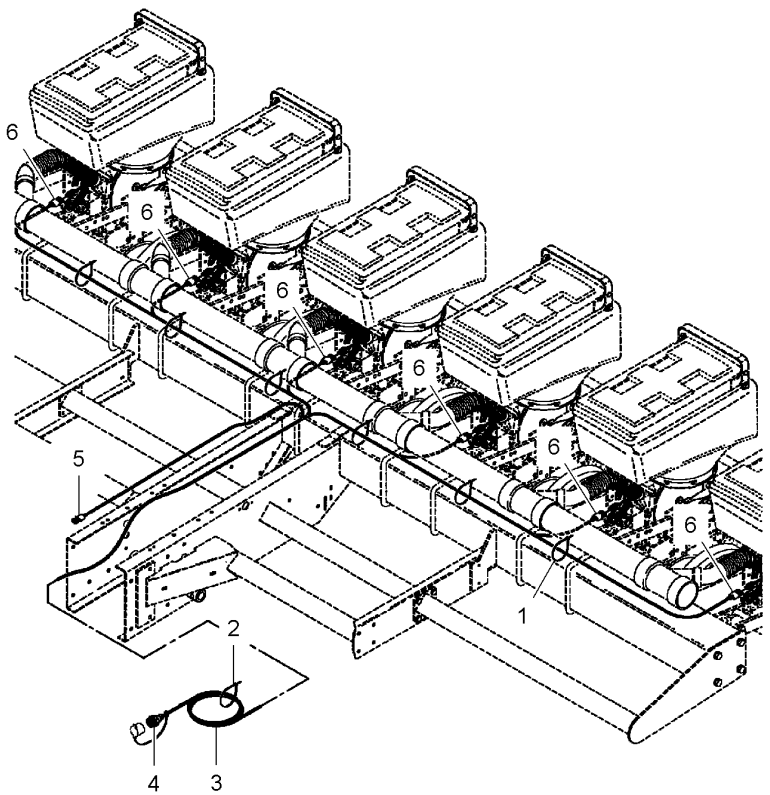


| | | | | | |
|---|---|---|---|---|---|
| 1* | 70937133 | ◀▶ 15"-1/4 | 12 | CABLE TIE | ATTACHE CABLE<br>FASCETTA CAVI | KABELBINDER<br>APRIETACABLES |
| 2* | 7724347 | ◀▶ 11" | 14 | CABLE TIE | ATTACHE CABLE<br>FASCETTA CAVI | KABELBINDER<br>APRIETACABLES |
| 3* | W248511B | | 1 | HARNESS | FAISCEAU<br>FASCIOCAVI | KABELBAUM<br>MAZO CABLES |
| 3* | 855447 | 3 | 1 | ELECTRIC SOCKET | PRISE ELEC FEMEL<br>PRESAELETTRIC F | STECKDOSE<br>TOMACORRIENTE F |
| 3* | 855425 | 3 | 1 | ELECTRIC SOCKET | PRISE ELEC FEMEL<br>PRESAELETTRIC F | STECKDOSE<br>TOMACORRIENTE F |
| 3* | N855429 | 3 | 6 | ELECTRIC SOCKET | PRISE ELEC FEMEL<br>PRESAELETTRIC F | STECKDOSE<br>TOMACORRIENTE F |
| 4* | 855447 | | X | ELECTRIC SOCKET | PRISE ELEC FEMEL<br>PRESAELETTRIC F | STECKDOSE<br>TOMACORRIENTE F |
| 5* | 855425 | | X | ELECTRIC SOCKET | PRISE ELEC FEMEL<br>PRESAELETTRIC F | STECKDOSE<br>TOMACORRIENTE F |
| 6* | N855429 | | X | ELECTRIC SOCKET | PRISE ELEC FEMEL<br>PRESAELETTRIC F | STECKDOSE<br>TOMACORRIENTE F |

| Electronic Sensor Harness<br>Faisceau Capteur<br>Sensor Kabelbaum<br>Fascio Sensore<br>Haz Captador | 90-30 | 8 Row<br>8 Rangs<br>8 Reihes<br>8 Lineas<br>8 Lineas |
|---|---|---|

5-PL17-004-B

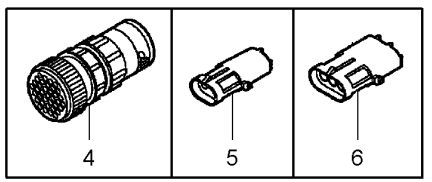


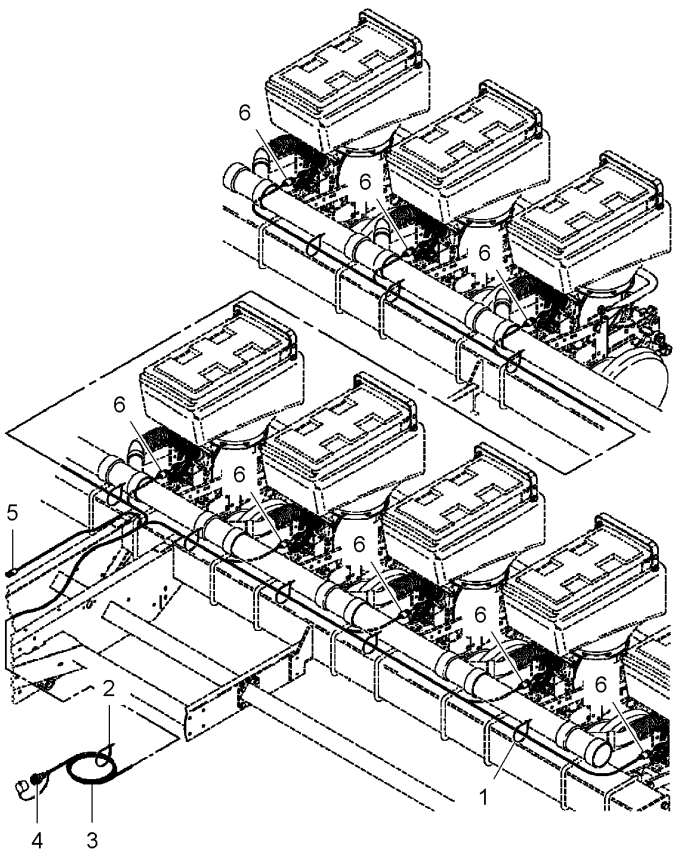


| | | | | | |
|---|---|---|---|---|---|
| 1* | 70937133 | ◀▶ 15"-1/4 | 12 | CABLE TIE | ATTACHE CABLE<br>FASCETTA CAVI<br>APRIETACABLES<br>KABELBINDER |
| 2* | 7724347 | ◀▶ 11" | 14 | CABLE TIE | ATTACHE CABLE<br>FASCETTA CAVI<br>APRIETACABLES<br>KABELBINDER |
| 3* | W248512B | | 1 | HARNESS | FAISCEAU<br>FASCIOCAVI<br>MAZO CABLES<br>KABELBAUM |
| 3* | 855447 | 3 | 1 | ELECTRIC SOCKET | PRISE ELEC FEMEL<br>PRESAELETTRIC F<br>TOMACORRIENTE F<br>STECKDOSE |
| 3* | 855425 | 3 | 1 | ELECTRIC SOCKET | PRISE ELEC FEMEL<br>PRESAELETTRIC F<br>TOMACORRIENTE F<br>STECKDOSE |
| 3* | N855429 | 3 | 8 | ELECTRIC SOCKET | PRISE ELEC FEMEL<br>PRESAELETTRIC F<br>TOMACORRIENTE F<br>STECKDOSE |
| 4* | 855447 | | X | ELECTRIC SOCKET | PRISE ELEC FEMEL<br>PRESAELETTRIC F<br>TOMACORRIENTE F<br>STECKDOSE |
| 5* | 855425 | | X | ELECTRIC SOCKET | PRISE ELEC FEMEL<br>PRESAELETTRIC F<br>TOMACORRIENTE F<br>STECKDOSE |
| 6* | N855429 | | X | ELECTRIC SOCKET | PRISE ELEC FEMEL<br>PRESAELETTRIC F<br>TOMACORRIENTE F<br>STECKDOSE |

| Electronic Sensor Harness<br>Faisceau Capteur<br>Sensor Kabelbaum<br>Fascio Sensore<br>Haz Captador | 90-35 | 12 Rows<br>12 Rangs<br>12 Reihes<br>12 Lineas<br>12 Lineas |
|---|---|---|

5-PL17-005-A

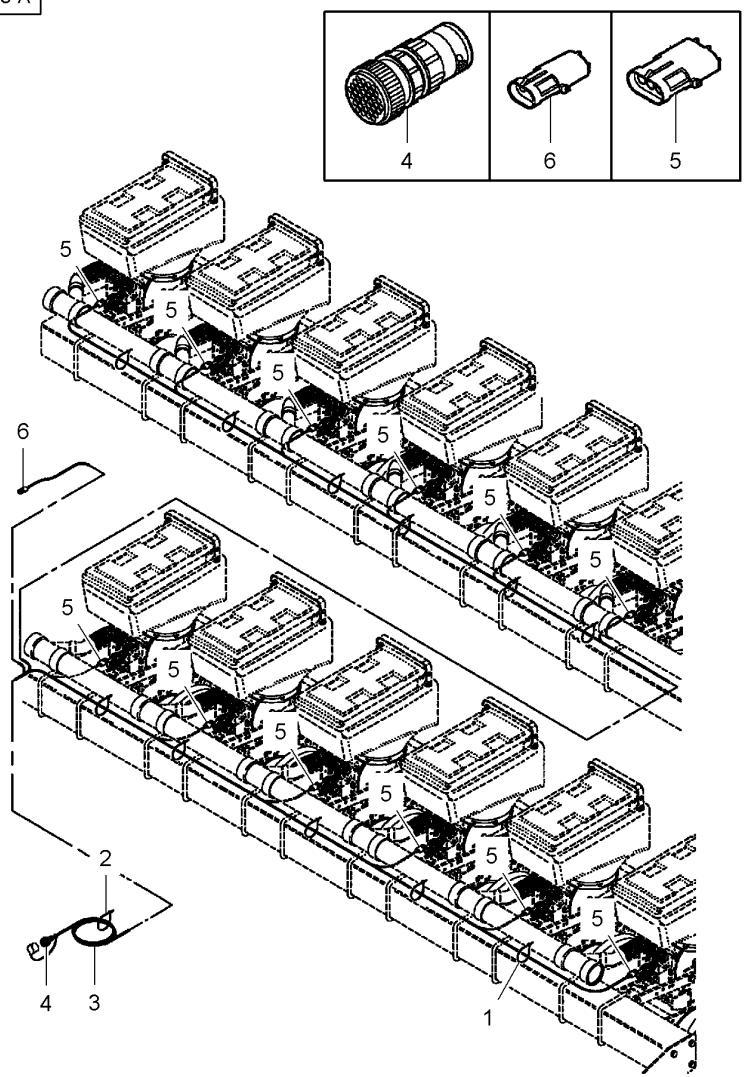


| | | | | | |
|---|---|---|---|---|---|
| 1* 70937133 | ◀▶ 15"-1/4 | 11 | CABLE TIE | ATTACHE CABLE<br>FASCETTA CAVI | KABELBINDER<br>APRIETACABLES |
| 2* 7724347 | ◀▶ 11" | 14 | CABLE TIE | ATTACHE CABLE<br>FASCETTA CAVI | KABELBINDER<br>APRIETACABLES |
| 3* W248513B | | 1 | HARNESS | FAISCEAU<br>FASCIOCAVI | KABELBAUM<br>MAZO CABLES |
| 3* 855447 | 3 | 1 | ELECTRIC SOCKET | PRISE ELEC FEMEL<br>PRESAELETTRIC F | STECKDOSE<br>TOMACORRIENTE F |
| 3* 855425 | 3 | 1 | ELECTRIC SOCKET | PRISE ELEC FEMEL<br>PRESAELETTRIC F | STECKDOSE<br>TOMACORRIENTE F |
| 3* N855429 | 3 | 12 | ELECTRIC SOCKET | PRISE ELEC FEMEL<br>PRESAELETTRIC F | STECKDOSE<br>TOMACORRIENTE F |
| 4* 855447 | | X | ELECTRIC SOCKET | PRISE ELEC FEMEL<br>PRESAELETTRIC F | STECKDOSE<br>TOMACORRIENTE F |
| 5* N855429 | | X | ELECTRIC SOCKET | PRISE ELEC FEMEL<br>PRESAELETTRIC F | STECKDOSE<br>TOMACORRIENTE F |
| 6* 855425 | | X | ELECTRIC SOCKET | PRISE ELEC FEMEL<br>PRESAELETTRIC F | STECKDOSE<br>TOMACORRIENTE F |

**Electronic Sensor Harness**
**Faisceau Capteur**
**Sensor Kabelbaum**
**Fascio Sensore**
**Haz Captador**

**90-40**

5-PL17-006-A

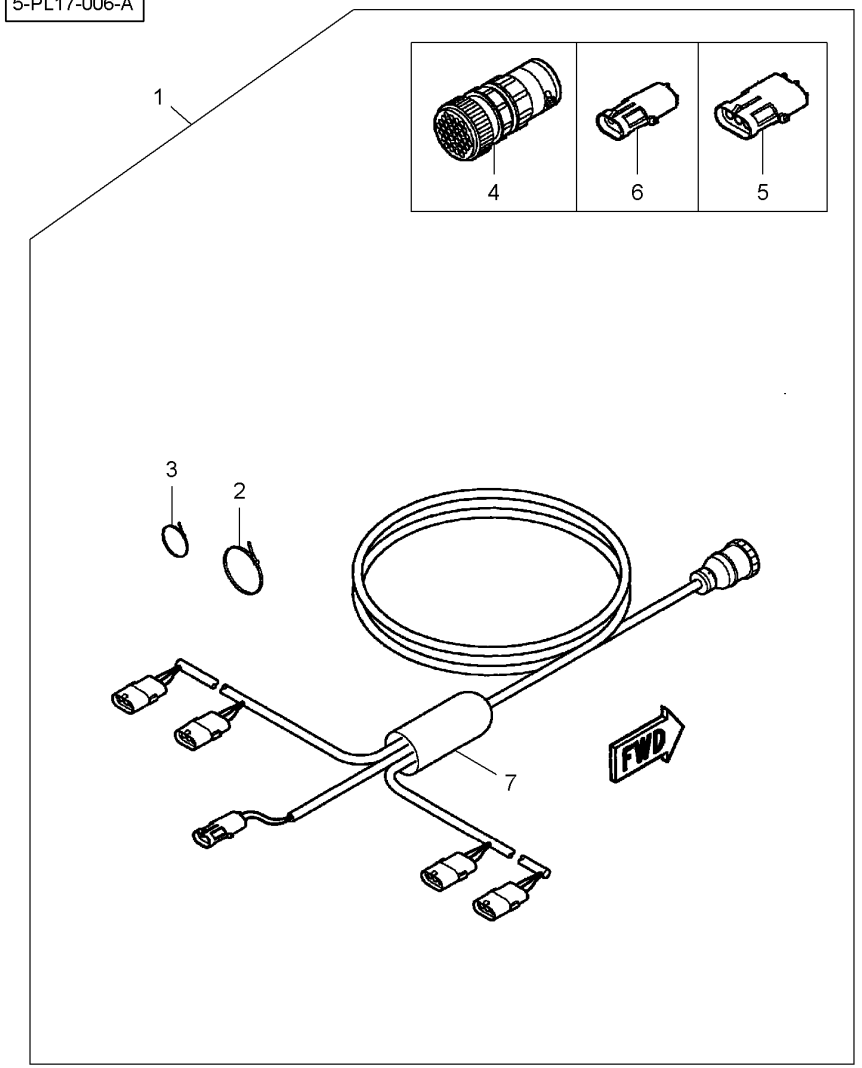


| | | | | | |
|---|---|---|---|---|---|
| 1 | 2087209 | [A] | **1** KIT, ATTACHMENT | JEU ACCESSOIRES<br>KIT ACCESSORI | SATZ ANBAUTEILE<br>JUEGO ACCESORIO |
| 1 | 2087219 | [B] | **1** KIT, ATTACHMENT | JEU ACCESSOIRES<br>KIT ACCESSORI | SATZ ANBAUTEILE<br>JUEGO ACCESORIO |
| 1 | 2087229 | [C] | **1** KIT, ATTACHMENT | JEU ACCESSOIRES<br>KIT ACCESSORI | SATZ ANBAUTEILE<br>JUEGO ACCESORIO |
| 1 | 2087239 | [D] | **1** KIT, ATTACHMENT | JEU ACCESSOIRES<br>KIT ACCESSORI | SATZ ANBAUTEILE<br>JUEGO ACCESORIO |
| 2 | 70937133 | 1 | **X** CABLE TIE | ATTACHE CABLE<br>FASCETTA CAVI | KABELBINDER<br>APRIETACABLES |
| 3 | **70925094** | 1 | **X** CABLE TIE | ATTACHE CABLE<br>FASCETTA CAVI | KABELBINDER<br>APRIETACABLES |
| 4 | 855447 | 1 | **1** ELECTRIC SOCKET | PRISE ELEC FEMEL<br>PRESAELETTRIC F | STECKDOSE<br>TOMACORRIENTE F |
| 5 | N855429 | 1 | **1** ELECTRIC SOCKET | PRISE ELEC FEMEL<br>PRESAELETTRIC F | STECKDOSE<br>TOMACORRIENTE F |
| 6 | 855425 | 1 | **1** ELECTRIC SOCKET | PRISE ELEC FEMEL<br>PRESAELETTRIC F | STECKDOSE<br>TOMACORRIENTE F |
| 7 | W248510B | 1 [A] | **1** HARNESS | FAISCEAU<br>FASCIOCAVI | KABELBAUM<br>MAZO CABLES |
| 7 | W248511B | 1 [B] | **1** HARNESS | FAISCEAU<br>FASCIOCAVI | KABELBAUM<br>MAZO CABLES |
| 7 | W248512B | 1 [C] | **1** HARNESS | FAISCEAU<br>FASCIOCAVI | KABELBAUM<br>MAZO CABLES |
| 7 | W248513B | 1 [D] | **1** HARNESS | FAISCEAU<br>FASCIOCAVI | KABELBAUM<br>MAZO CABLES |

[A] 4 ROW
4 RANGS
4 REIHE
4 LINEA
4 LINEA

[B] 6 ROWS
6 RANGS
6 REIHES
6 LINEAS
6 LINEAS

[C] 8 ROW
8 RANGS
8 REIHE
8 LINEA
8 LINEA

[D] 12 ROW
12 RANGS
12 REIHE
12 LINEA
12 LINEA

| Monitor<br>Moniteur De Contrôle<br>Kontrollmonitor<br>Monitor Di Controllo<br>Monitor De Control | 90-45 | S.M 1500<br>S.M 1500<br>S.M 1500<br>S.M 1500<br>S.M 1500 |
|---|---|---|

5-PL53-001-B

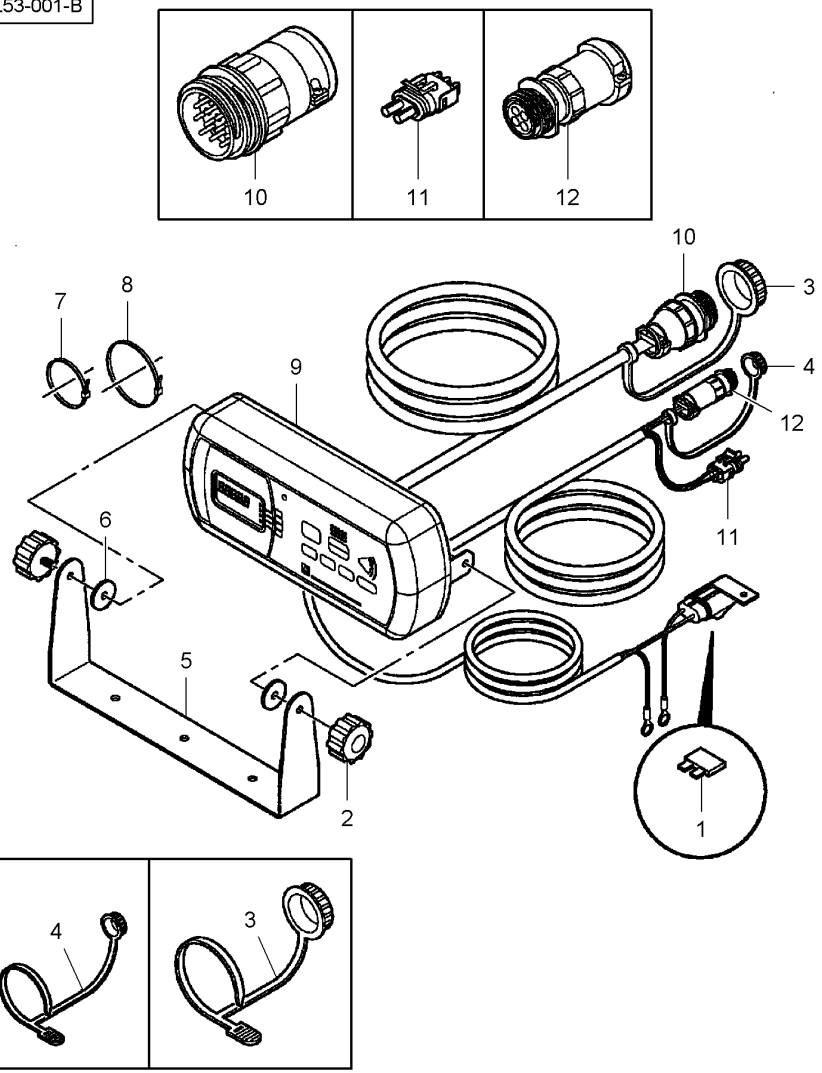


| | | | | | |
|---|---|---|---|---|---|
| 1* | **70937681** | 3 Amp | **X** FUSE | FUSIBLE<br>FUSIBILE | SICHERUNG<br>FUSIBLE |
| 2 | N856673 | | **2** KNOB | POMMEAU<br>POMELO | KNOPF<br>POMO |
| 3* | 851210 | | **X** PLUG | BOUCHON<br>TAPPO | STOPFEN<br>TAPON |
| 4* | 855412 | | **X** PLUG | BOUCHON<br>TAPPO | STOPFEN<br>TAPON |
| 5 | N857633 | | **1** BRACKET | SUPPORT FIXATION<br>STAFFETTA | HALTEARM<br>SOPORTE |
| 6 | N856674 | | **2** WASHER | RONDELLE<br>RONDELLA | SCHEIBE<br>ARANDELA |
| 7* | 700717644 | ◀▶ 8" | **8** CABLE TIE | ATTACHE CABLE<br>FASCETTA CAVI | KABELBINDER<br>APRIETACABLES |
| 8* | 70937133 | ◀▶ 15"-1/4 | **2** CABLE TIE | ATTACHE CABLE<br>FASCETTA CAVI | KABELBINDER<br>APRIETACABLES |
| 9* | N857632 | | **1** MONITOR | MONITOR<br>MONITORE | RATGEBER<br>MONITOR |
| 9* | 851210 | 9 | **1** PLUG | BOUCHON<br>TAPPO | STOPFEN<br>TAPON |
| 9* | 855412 | 9 | **1** PLUG | BOUCHON<br>TAPPO | STOPFEN<br>TAPON |
| 9* | 855448 | 9 | **1** ELECTRICAL PLUG | PRISE ELECT MALE<br>PRESAELETTRICI M | STECKER<br>TOMACORRIENTE M |
| 9* | 855426 | 9 | **1** ELECTRICAL PLUG | PRISE ELECT MALE<br>PRESAELETTRICI M | STECKER<br>TOMACORRIENTE M |
| 9* | N855437 | 9 | **1** ELECTRIC SOCKET | PRISE ELEC FEMEL<br>PRESAELETTRIC F | STECKDOSE<br>TOMACORRIENTE F |
| 9* | **70937681** | 9 3 Amp | **1** FUSE | FUSIBLE<br>FUSIBILE | SICHERUNG<br>FUSIBLE |
| 10* | 855448 | | **X** ELECTRICAL PLUG | PRISE ELECT MALE<br>PRESAELETTRICI M | STECKER<br>TOMACORRIENTE M |
| 11* | 855426 | | **X** ELECTRICAL PLUG | PRISE ELECT MALE<br>PRESAELETTRICI M | STECKER<br>TOMACORRIENTE M |
| 12* | N855437 | | **X** ELECTRIC SOCKET | PRISE ELEC FEMEL<br>PRESAELETTRIC F | STECKDOSE<br>TOMACORRIENTE F |

| Monitor<br>Moniteur De Contrôle<br>Kontrollmonitor<br>Monitor Di Controllo<br>Monitor De Control | 90-50 | S.M 1500 (Kit)<br>S.M 1500 (Kit)<br>S.M 1500 (Kit)<br>S.M 1500 (Kit)<br>S.M 1500 (Kit) |
|---|---|---|

5-PL53-003-B

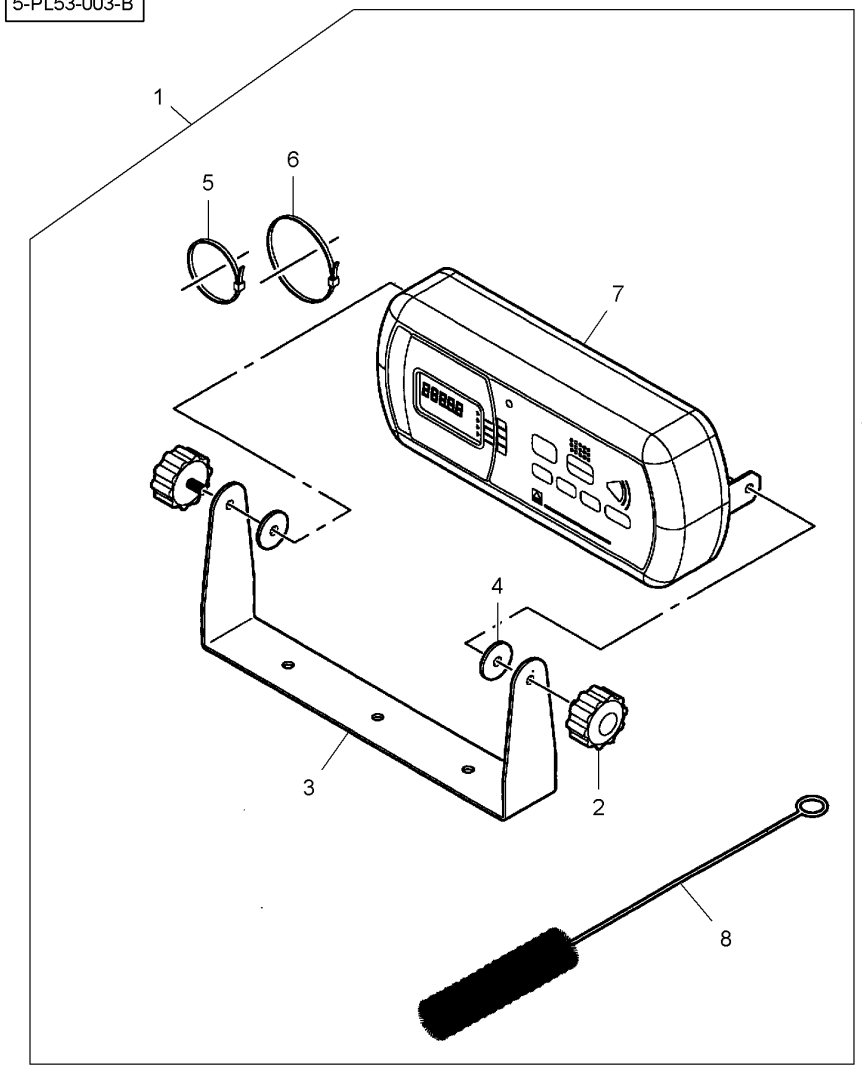


| | | | | | |
|---|---|---|---|---|---|
| 1 | 6100320 | | **1** KIT, ATTACHMENT | JEU ACCESSOIRES<br>KIT ACCESSORI | SATZ ANBAUTEILE<br>JUEGO ACCESORIO |
| 2 | N856673 | 1 | **2** KNOB | POMMEAU<br>POMELO | KNOPF<br>POMO |
| 3 | N857633 | 1 | **1** BRACKET | SUPPORT FIXATION<br>STAFFETTA | HALTEARM<br>SOPORTE |
| 4 | N856674 | 1 | **2** WASHER | RONDELLE<br>RONDELLA | SCHEIBE<br>ARANDELA |
| 5 | **70925094** | 1 | **6** CABLE TIE | ATTACHE CABLE<br>FASCETTA CAVI | KABELBINDER<br>APRIETACABLES |
| 6 | 7041007 | 1 | **2** TIE | ATTACHE<br>TRAVERSA ATTACCO | ANBINDUNG<br>BARRA DE ENLACE |
| 7 | N857632 | 1 | **1** MONITOR | MONITOR<br>MONITORE | RATGEBER<br>MONITOR |
| 8 | **W239661B** | 1 | **1** BRUSH | BALAI<br>SPAZZOLA | BUERSTE<br>ESCOBILLA |

| Monitor<br>Moniteur De Contrôle<br>Kontrollmonitor<br>Monitor Di Controllo<br>Monitor De Control | 90-55 | S.M 4000<br>S.M 4000<br>S.M 4000<br>S.M 4000<br>S.M 4000 |
|---|---|---|

5-PL53-002-B

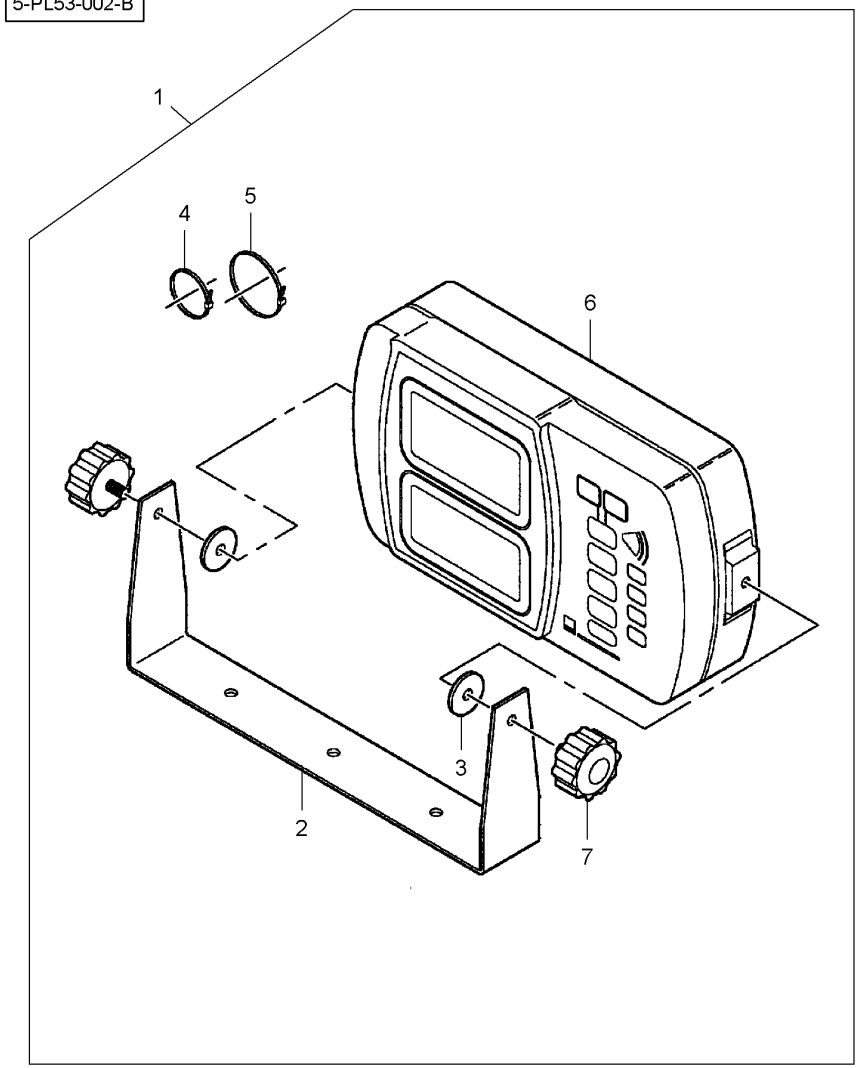


| | | | | | | |
|---|---|---|---|---|---|---|
| 1* | 6000433 | | **1** | KIT, ATTACHMENT | JEU ACCESSOIRES<br>KIT ACCESSORI | SATZ ANBAUTEILE<br>JUEGO ACCESORIO |
| 2* | N856672 | 1 | **1** | BRACKET | SUPPORT FIXATION<br>STAFFETTA | HALTEARM<br>SOPORTE |
| 3* | N856674 | 1 | **2** | WASHER | RONDELLE<br>RONDELLA | SCHEIBE<br>ARANDELA |
| 4* | **70925094** | 1 ◀▶ 8"-1/2 | **6** | CABLE TIE | ATTACHE CABLE<br>FASCETTA CAVI | KABELBINDER<br>APRIETACABLES |
| 5* | 7041007 | 1 ◀▶ 15"-1/4 | **2** | TIE | ATTACHE<br>TRAVERSA ATTACCO | ANBINDUNG<br>BARRA DE ENLACE |
| 6* | N856984 | 1 | **1** | MONITOR | MONITOR<br>MONITORE | RATGEBER<br>MONITOR |
| 7* | N856673 | 1 | **2** | KNOB | POMMEAU<br>POMELO | KNOPF<br>POMO |
| 8* | N856985 | 1 [A]<br>👁 90-60 No 1 | **1** | HARNESS | FAISCEAU<br>FASCIOCAVI | KABELBAUM<br>MAZO CABLES |
| 9* | 853183 | 1 [A]<br>👁 90-75 No 1 | **1** | HARNESS | FAISCEAU<br>FASCIOCAVI | KABELBAUM<br>MAZO CABLES |

[A] NOT ILLUSTRATED
NON ILLUSTRE
NICHT ABGEBILDET
NON ILLUSTRATO
NO ILUSTRADO

| Monitor<br>Moniteur De Contrôle<br>Kontrollmonitor<br>Monitor Di Controllo<br>Monitor De Control | 90-60 | S.M 4000<br>S.M 4000<br>S.M 4000<br>S.M 4000<br>S.M 4000 |
|---|---|---|

5-PL53-005-A

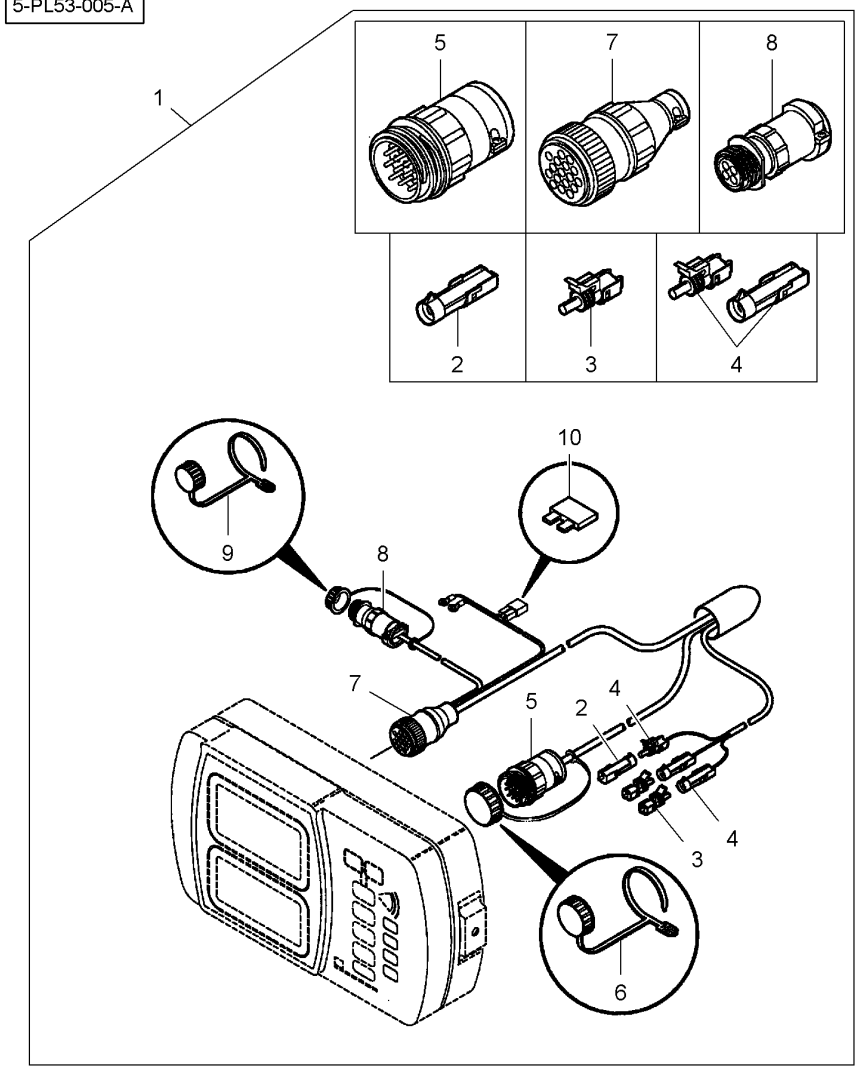


| | | | | | |
|---|---|---|---|---|---|
| 1* | N856985 | | **1** | HARNESS | FAISCEAU<br>FASCIOCAVI | KABELBAUM<br>MAZO CABLES |
| 2* | N858104 | 1 | **1** | INTAKE | PRISE<br>ASPIRAZIONE | SAUGROHR<br>ENTRADA |
| 3* | N858105 | 1 | **2** | INTAKE | PRISE<br>ASPIRAZIONE | SAUGROHR<br>ENTRADA |
| 4* | N857249 | 1 | **3** | INTAKE | PRISE<br>ASPIRAZIONE | SAUGROHR<br>ENTRADA |
| 5* | 855448 | 1 | **1** | ELECTRICAL PLUG | PRISE ELECT MALE<br>PRESAELETTRICI M | STECKER<br>TOMACORRIENTE M |
| 6* | 851210 | 1 | **1** | PLUG | BOUCHON<br>TAPPO | STOPFEN<br>TAPON |
| 7* | N857247 | 1 | **1** | ELECTRIC SOCKET | PRISE ELEC FEMEL<br>PRESAELETTRIC F | STECKDOSE<br>TOMACORRIENTE F |
| 8* | N855437 | 1 | **1** | ELECTRIC SOCKET | PRISE ELEC FEMEL<br>PRESAELETTRIC F | STECKDOSE<br>TOMACORRIENTE F |
| 9* | 855412 | 1 | **1** | PLUG | BOUCHON<br>TAPPO | STOPFEN<br>TAPON |
| 10* | **N856983** | 1 7,5 Amp | **1** | FUSE | FUSIBLE<br>FUSIBILE | SICHERUNG<br>FUSIBLE |

| Electrical Equipment<br>Equipement Electrique<br>Elektrische Anlage<br>Impianto Elettrico<br>Instalacion Electrica | 90-65 | Harness<br>Faisceau<br>Kabelbaum<br>Fascio<br>Haz |
|---|---|---|

5-PL09-010-B

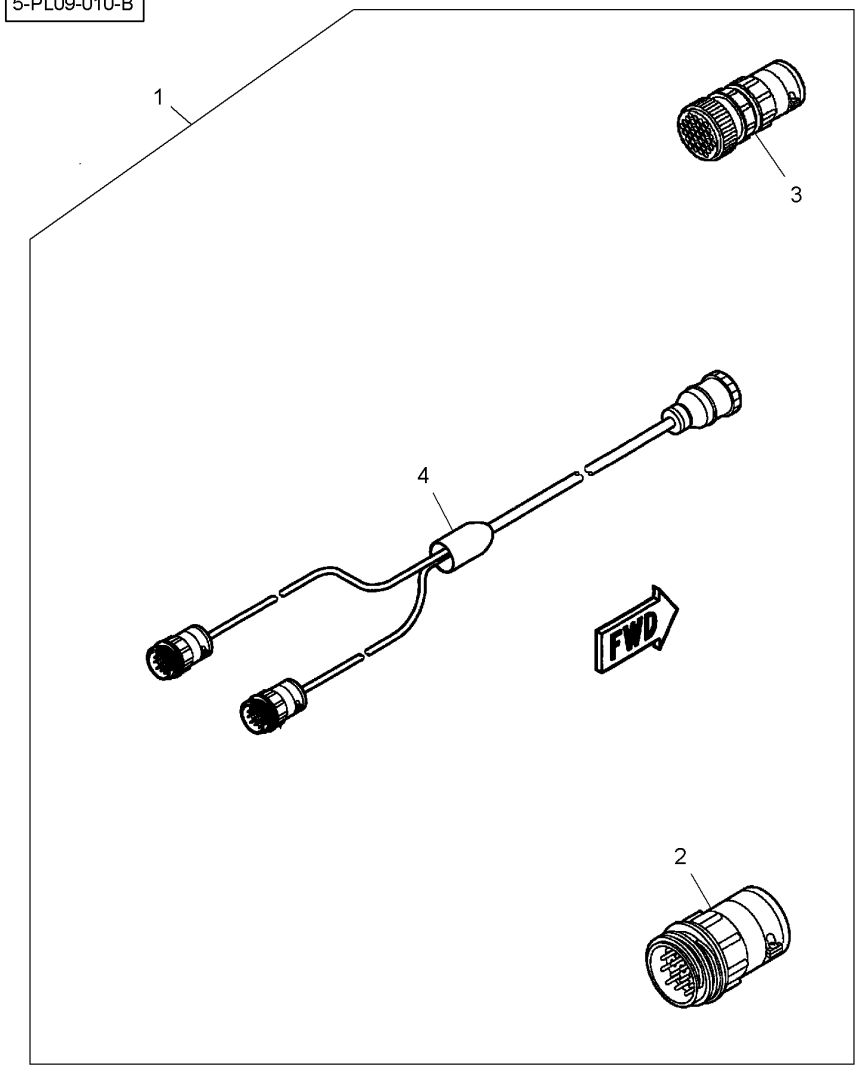


| | | | | | | |
|---|---|---|---|---|---|---|
| 1* | 6100321 | | [A] | 1 | KIT, ATTACHMENT | JEU ACCESSOIRES<br>KIT ACCESSORI | SATZ ANBAUTEILE<br>JUEGO ACCESORIO |
| 1* | 2087529 | | [B] | 1 | KIT, ATTACHMENT | JEU ACCESSOIRES<br>KIT ACCESSORI | SATZ ANBAUTEILE<br>JUEGO ACCESORIO |
| 2 | 855448 | 1 | | 1 | ELECTRICAL PLUG | PRISE ELECT MALE<br>PRESAELETTRICI M | STECKER<br>TOMACORRIENTE M |
| 3 | 855447 | 1 | | 1 | ELECTRIC SOCKET | PRISE ELEC FEMEL<br>PRESAELETTRIC F | STECKDOSE<br>TOMACORRIENTE F |
| 4* | N857256 | 1 | [A] | 1 | HARNESS | FAISCEAU<br>FASCIOCAVI | KABELBAUM<br>MAZO CABLES |
| 4* | W248514B | 1 | [B] | 1 | HARNESS | FAISCEAU<br>FASCIOCAVI | KABELBAUM<br>MAZO CABLES |

[A] SM 1500 - 12 ROWS
SM 1500 - 12 RANGS
SM 1500 - 12 REIHES
SM 1500 - 12 LINEAS
SM 1500 - 12 LINEAS

[B] SM 4000 - 16 ROWS
SM 4000 - 16 RANGS
SM 4000 - 16 REIHES
SM 4000 - 16 LINEAS
SM 4000 - 16 LINEAS

**Radar**
**Radar**
**Radar**
**Radar**
**Radar**

# 90-70

5-PM13-001-A

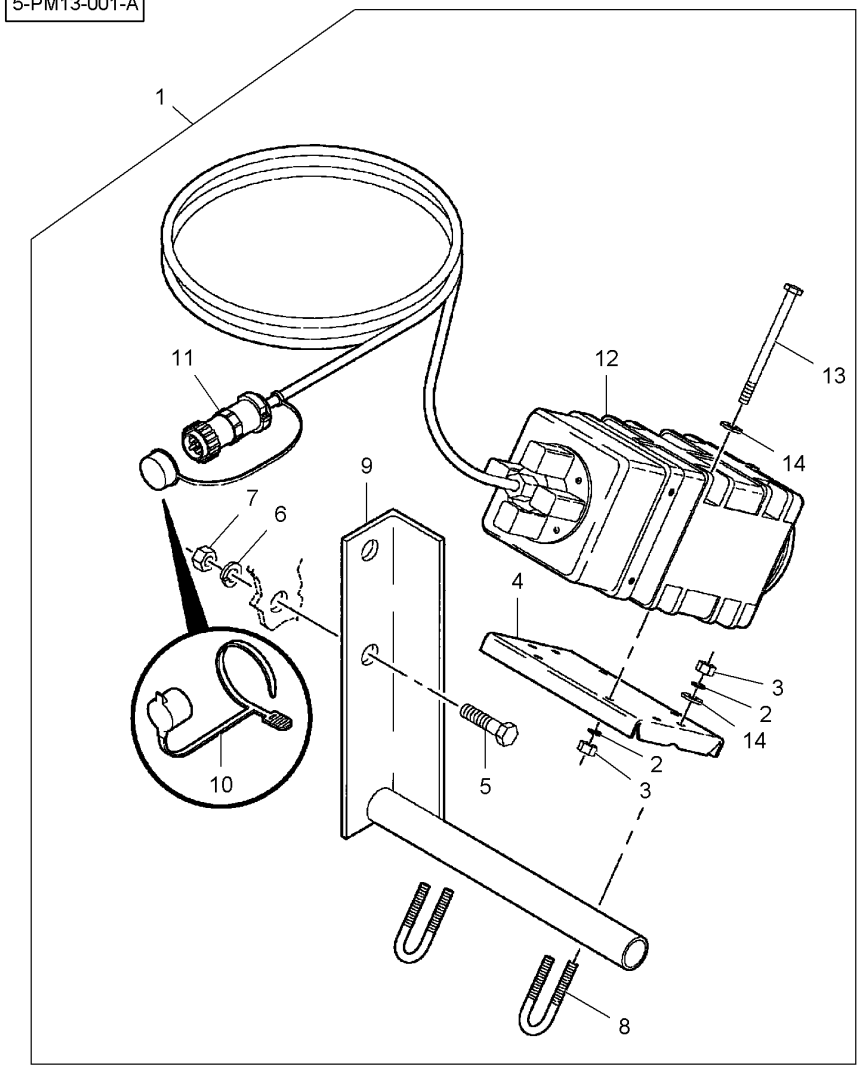


| | | | | | | |
|---|---|---|---|---|---|---|
| 1* | 2087319 | | **1** | KIT, ATTACHMENT | JEU ACCESSOIRES<br>KIT ACCESSORI | SATZ ANBAUTEILE<br>JUEGO ACCESORIO |
| 2* | 705012 | 1 1/4" | **8** | LOCK WASHER | RONDELLE FREIN<br>RONDELLA ARRESTO | SICHERUNGSRING<br>ARANDELA SEGURID |
| 3* | 70916622 | 1 1/4"-20 | **8** | NUT UNC | ECROU UNC<br>DADO UNC | MUTTER UNC<br>TUERCA UNC |
| 4* | 851216 | 1 | **1** | BRACKET | SUPPORT FIXATION<br>STAFFETTA | HALTEARM<br>SOPORTE |
| 5* | 70921969 | 1 3/8"-16 X 1-1/2 | **2** | BOLT UNC | BOULON UNC<br>BULLONE UNC | MASCH.SCHRB.UNC<br>PERNO UNC |
| 6* | 70916965 | 1 3/8" | **2** | LOCK WASHER | RONDELLE FREIN<br>RONDELLA ARRESTO | SICHERUNGSRING<br>ARANDELA SEGURID |
| 7* | **70916950** | 1 3/8"-16 | **2** | NUT UNC | ECROU UNC<br>DADO UNC | MUTTER UNC<br>TUERCA UNC |
| 8* | 851217 | 1 1/4"-20 | **2** | U BOLT | ETRIER FILETE<br>BULLONE A STAFFA | BUEGELSCHRAUBE<br>BRIDA EN U |
| 9* | 851215 | 1 | **1** | BRACKET | SUPPORT FIXATION<br>STAFFETTA | HALTEARM<br>SOPORTE |
| 10* | N851212 | 1 | **X** | PLUG | BOUCHON<br>TAPPO | STOPFEN<br>TAPON |
| 11* | 855436 | 1 | **X** | ELECTRICAL PLUG | PRISE ELECT MALE<br>PRESAELETTRICI M | STECKER<br>TOMACORRIENTE M |
| 12* | 72512508 | 1 | **1** | RADAR | RADAR<br>RADAR | RADAR<br>RADAR |
| 12* | N851212 | 12 | **1** | PLUG | BOUCHON<br>TAPPO | STOPFEN<br>TAPON |
| 12* | 855436 | 12 | **1** | ELECTRICAL PLUG | PRISE ELECT MALE<br>PRESAELETTRICI M | STECKER<br>TOMACORRIENTE M |
| 13* | 70931272 | 1 1/4"-20 X 4 | **4** | CAPSCREW | VIS BOUCHON<br>TAPPO A VITE | HUTSCHRAUBE<br>TORNILLO TAPON |
| 14* | 70918264 | 1 1/4" | **8** | WASHER | RONDELLE<br>RONDELLA | SCHEIBE<br>ARANDELA |

| Radar<br>Radar<br>Radar<br>Radar<br>Radar | 90-75 | Harness<br>Faisceau<br>Kabelbaum<br>Fascio<br>Haz |
|---|---|---|

5-PM13-002-A

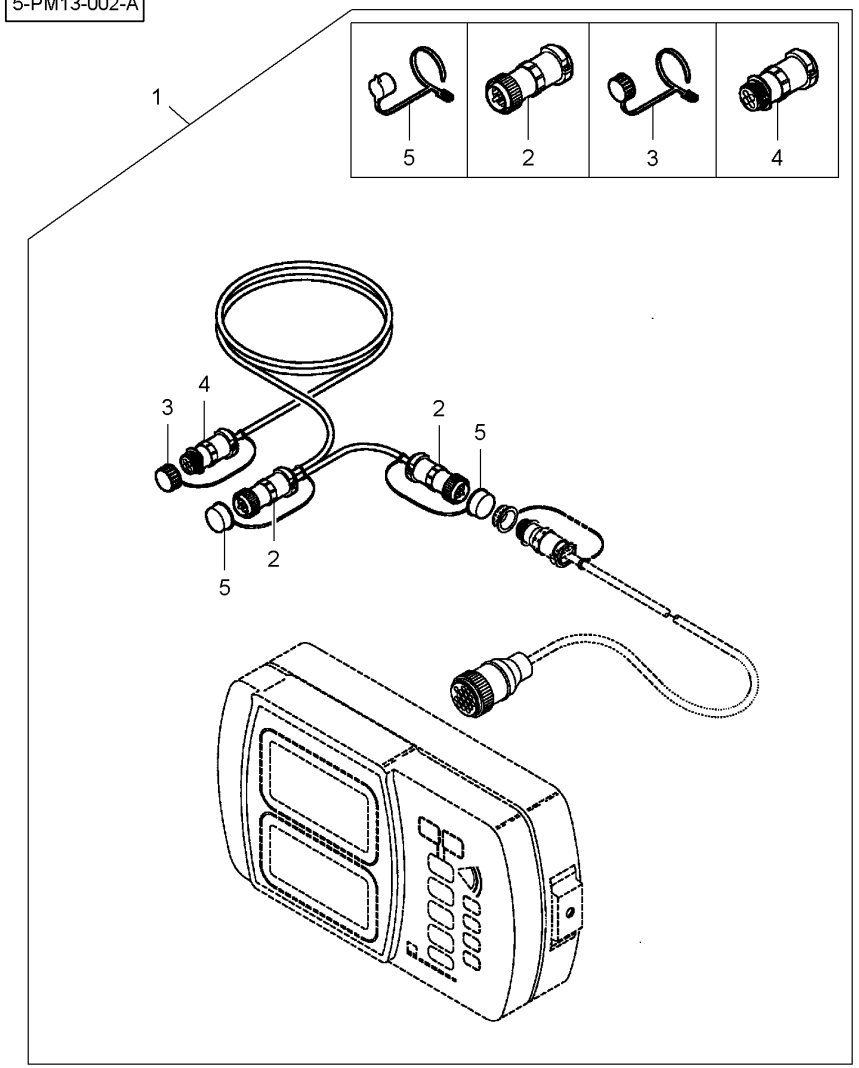


| | | | | | |
|---|---|---|---|---|---|
| 1* | 853183 | | **1** | HARNESS | FAISCEAU<br>FASCIOCAVI<br>KABELBAUM<br>MAZO CABLES |
| 2* | 855436 | 1 | **2** | ELECTRICAL PLUG | PRISE ELECT MALE<br>PRESAELETTRICI M<br>STECKER<br>TOMACORRIENTE M |
| 3* | 855412 | 1 | **1** | PLUG | BOUCHON<br>TAPPO<br>STOPFEN<br>TAPON |
| 4* | N855437 | 1 | **1** | ELECTRIC SOCKET | PRISE ELEC FEMEL<br>PRESAELETTRIC F<br>STECKDOSE<br>TOMACORRIENTE F |
| 5* | N851212 | 1 | **2** | PLUG | BOUCHON<br>TAPPO<br>STOPFEN<br>TAPON |

| Seed Tube & Sensor<br>Tube De Descente & Capteur<br>Saatleitungsrohr & Sensor<br>Tubo Di Caduta & Sensore<br>Tubo De Caída & Captador | 90-80 | High Rate<br>Haute Pression<br>Hochtarif<br>Alta Pressione<br>Alta Presion |
|---|---|---|

5-PM14-001-A

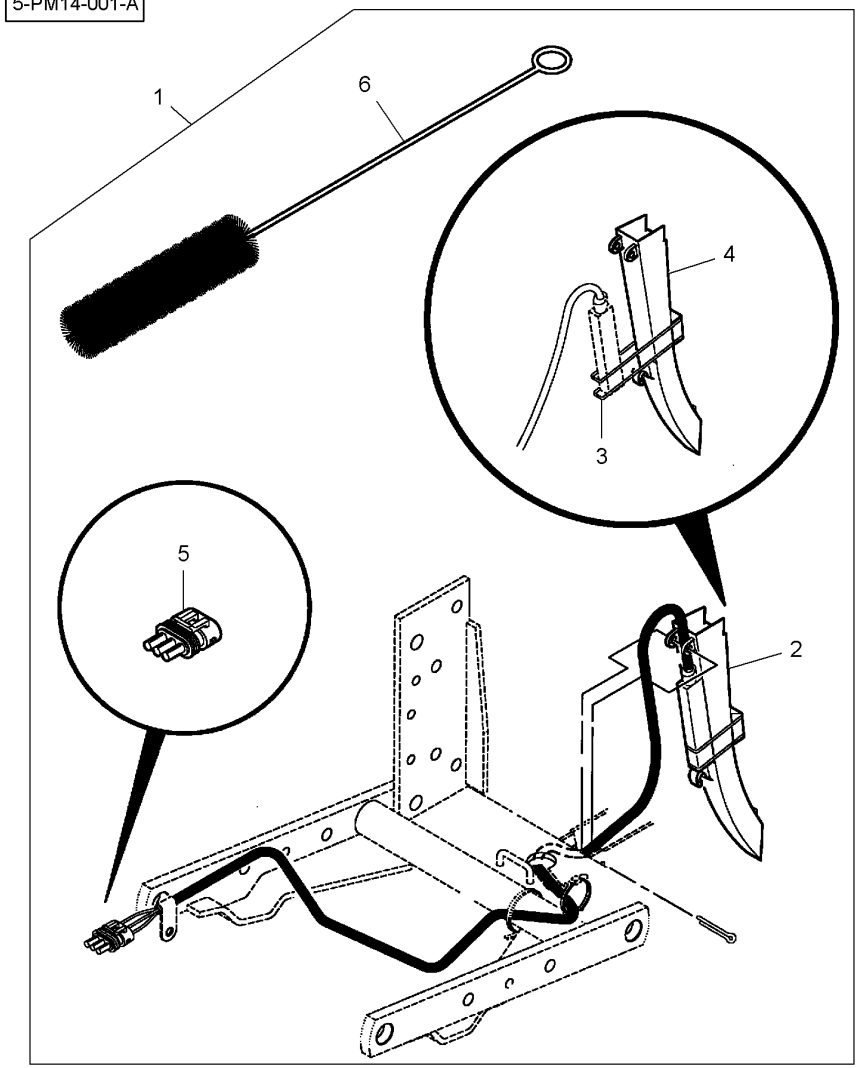


| | | | | | |
|---|---|---|---|---|---|
| 1* | 6100287 | | **1** | KIT, ATTACHMENT | JEU ACCESSOIRES<br>KIT ACCESSORI<br>SATZ ANBAUTEILE<br>JUEGO ACCESORIO |
| 2* | 853621 | 1 | **1** | TUBE | TUBE<br>TUBO.<br>ROHR<br>TUBO. |
| 3* | **70925094** | 2 | **1** | CABLE TIE | ATTACHE CABLE<br>FASCETTA CAVI<br>KABELBINDER<br>APRIETACABLES |
| 4* | 853775 | 2 | **1** | TUBE | TUBE<br>TUBO.<br>ROHR<br>TUBO. |
| 5* | 855430 | 2 | **1** | ELECTRICAL PLUG | PRISE ELECT MALE<br>PRESAELETTRICI M<br>STECKER<br>TOMACORRIENTE M |
| 6* | **W239661B** | 1 | **1** | BRUSH | BALAI<br>SPAZZOLA<br>BUERSTE<br>ESCOBILLA |

| Seed Tube & Sensor<br>Tube De Descente & Capteur<br>Saatleitungsrohr & Sensor<br>Tubo Di Caduta & Sensore<br>Tubo De Caída & Captador | 90-85 | Seed Smart<br>Graine Intelligente<br>Kluger Samen<br>Semini Faccia Male<br>Semilla Simpática |
|---|---|---|

5-PM14-002-A

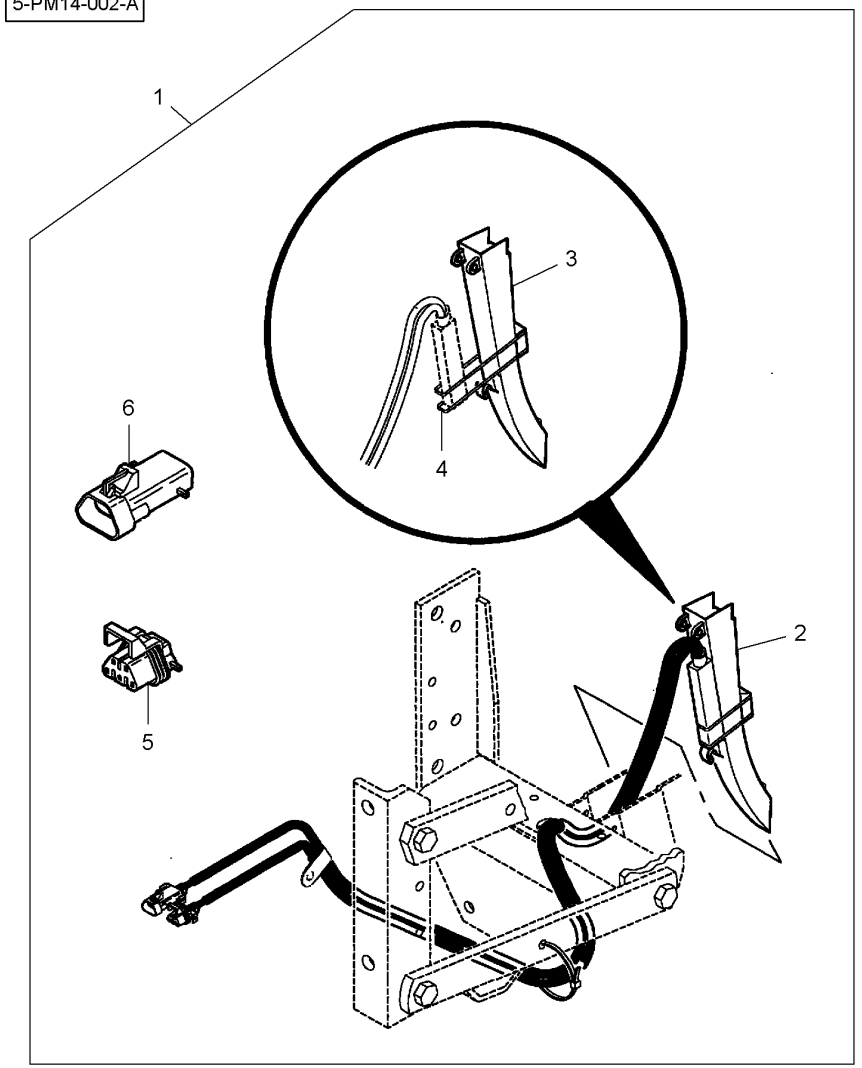


| | | | | | |
|---|---|---|---|---|---|
| 1 | 6100288 | | **1** KIT, ATTACHMENT | JEU ACCESSOIRES<br>KIT ACCESSORI | SATZ ANBAUTEILE<br>JUEGO ACCESORIO |
| 2 | N856509 | 1 | **1** SENSOR | DETECTEUR<br>SENSORE | SENSOR<br>DETECTOR |
| 3 | 853775 | 2 | **1** TUBE | TUBE<br>TUBO. | ROHR<br>TUBO. |
| 4 | **70925094** | 2 | **2** CABLE TIE | ATTACHE CABLE<br>FASCETTA CAVI | KABELBINDER<br>APRIETACABLES |
| 5 | N857252 | 1 | **1** ELECTRICAL PLUG | PRISE ELECT MALE<br>PRESAELETTRICI M | STECKER<br>TOMACORRIENTE M |
| 6 | N857251 | 1 | **1** ELECTRIC SOCKET | PRISE ELEC FEMEL<br>PRESAELETTRIC F | STECKDOSE<br>TOMACORRIENTE F |

**Magnetic Distance Sensor**
**Capteur Magnétique De Distance**
**Magnetischer Schleicher Von Distanz**
**Sensore Magnetico Di Distanza**
**Captador Magnético De Distancia**

**90-90**

5-PM15-001-A

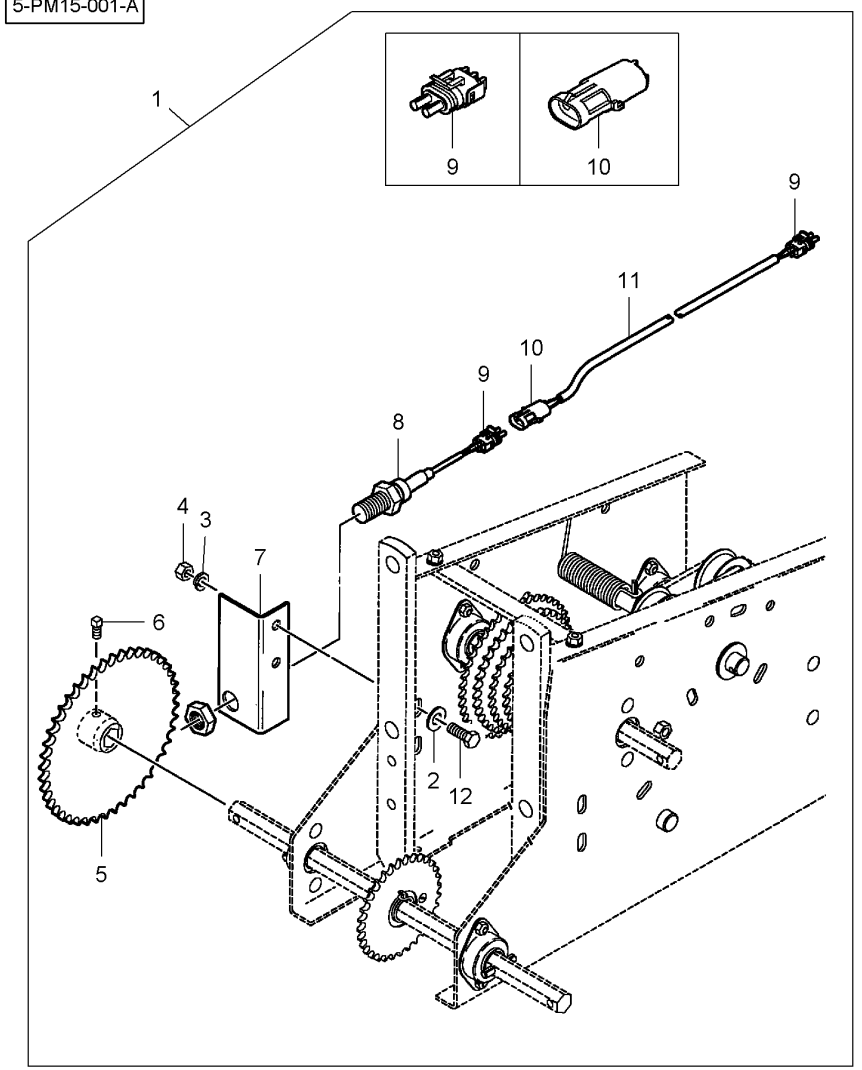


| | | | | | | |
|---|---|---|---|---|---|---|
| 1* | 6100059 | | 1 | KIT, ATTACHMENT | JEU ACCESSOIRES<br>KIT ACCESSORI | SATZ ANBAUTEILE<br>JUEGO ACCESORIO |
| 2* | **K2880** | 1 | 2 | WASHER | RONDELLE<br>RONDELLA | SCHEIBE<br>ARANDELA |
| 3* | 70916965 | 1 3/8" | 2 | LOCK WASHER | RONDELLE FREIN<br>RONDELLA ARRESTO | SICHERUNGSRING<br>ARANDELA SEGURID |
| 4* | **70916950** | 1 3/8"-16 | 2 | NUT UNC | ECROU UNC<br>DADO UNC | MUTTER UNC<br>TUERCA UNC |
| 5* | W247856B | 1 44 | 1 | SPROCKET | BARBOTIN<br>RUOTA MOTRICE | KETTENRAD<br>RUEDA DE CADENA |
| 6* | 70923085 | 1 5/16"-18 X 1/2 | 1 | SETSCREW | VIS DE BLOCAGE<br>INSIEME VITI | STELLSCHRAUBE<br>SET SCREW |
| 7* | 852737 | 1 | 1 | BRACKET | SUPPORT FIXATION<br>STAFFETTA | HALTEARM<br>SOPORTE |
| 8* | **W248521B** | 1 | 1 | SENSOR | DETECTEUR<br>SENSORE | SENSOR<br>DETECTOR |
| 8* | 855426 | 8 | 1 | ELECTRICAL PLUG | PRISE ELECT MALE<br>PRESAELETTRICI M | STECKER<br>TOMACORRIENTE M |
| 9* | 855426 | 1 | X | ELECTRICAL PLUG | PRISE ELECT MALE<br>PRESAELETTRICI M | STECKER<br>TOMACORRIENTE M |
| 10* | 855425 | 1 | X | ELECTRIC SOCKET | PRISE ELEC FEMEL<br>PRESAELETTRIC F | STECKDOSE<br>TOMACORRIENTE F |
| 11* | N857299 | 1 | 1 | HARNESS | FAISCEAU<br>FASCIOCAVI | KABELBAUM<br>MAZO CABLES |
| 11* | 855426 | 11 | 1 | ELECTRICAL PLUG | PRISE ELECT MALE<br>PRESAELETTRICI M | STECKER<br>TOMACORRIENTE M |
| 11* | 855425 | 11 | 1 | ELECTRIC SOCKET | PRISE ELEC FEMEL<br>PRESAELETTRIC F | STECKDOSE<br>TOMACORRIENTE F |
| 12* | 70921210 | 1 3/8"-16 X 1 | 2 | BOLT UNC | BOULON UNC<br>BULLONE UNC | MASCH.SCHRB.UNC<br>PERNO UNC |

| Electrical Equipment<br>Equipement Electrique<br>Elektrische Anlage<br>Impianto Elettrico<br>Instalacion Electrica | 90-95 | Harness<br>Faisceau<br>Kabelbaum<br>Fascio<br>Haz |
|---|---|---|

5-PL09-006-B

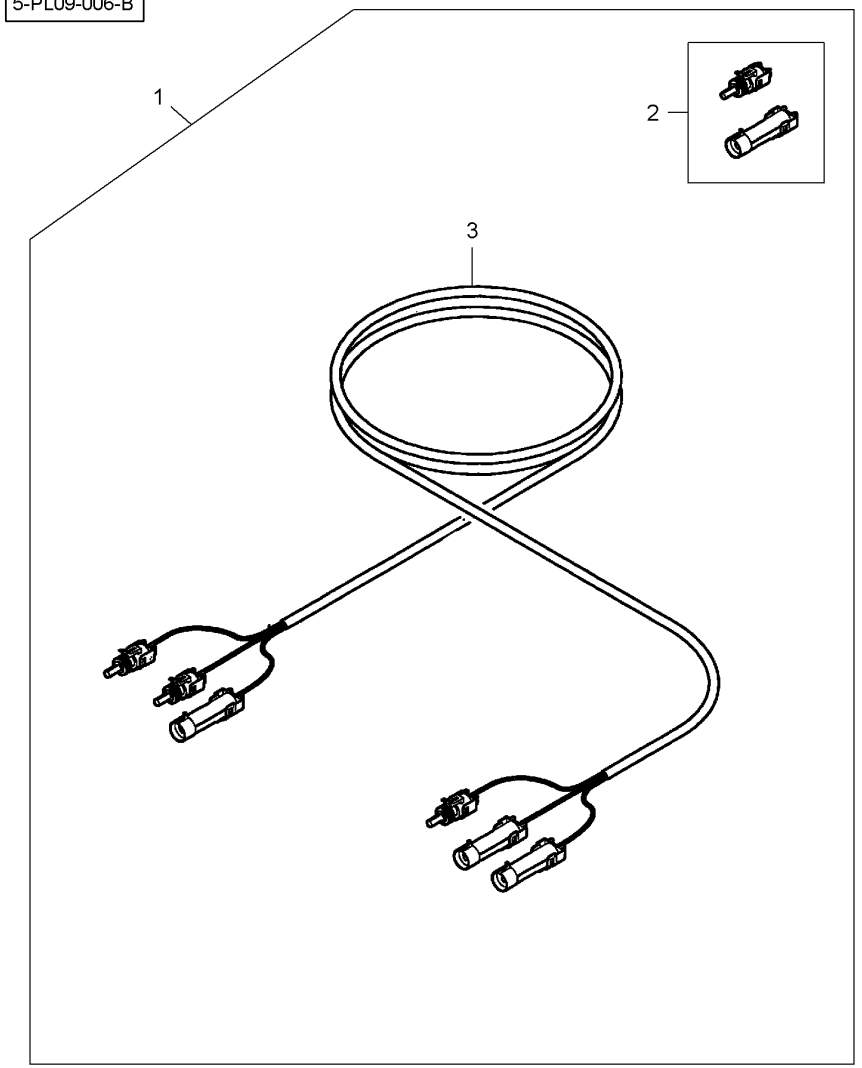


| | | | | | |
|---|---|---|---|---|---|
| 1 | 6100282 | | **1** KIT, ATTACHMENT | JEU ACCESSOIRES<br>KIT ACCESSORI | SATZ ANBAUTEILE<br>JUEGO ACCESORIO |
| 2 | N857249 | 1 | **1** INTAKE | PRISE<br>ASPIRAZIONE | SAUGROHR<br>ENTRADA |
| 3 | N856408 | 1 | **1** HARNESS | FAISCEAU<br>FASCIOCAVI | KABELBAUM<br>MAZO CABLES |

**Electrical Equipment**
**Equipement Electrique**
**Elektrische Anlage**
**Impianto Elettrico**
**Instalacion Electrica**

**90-100**

5-PL09-007-B

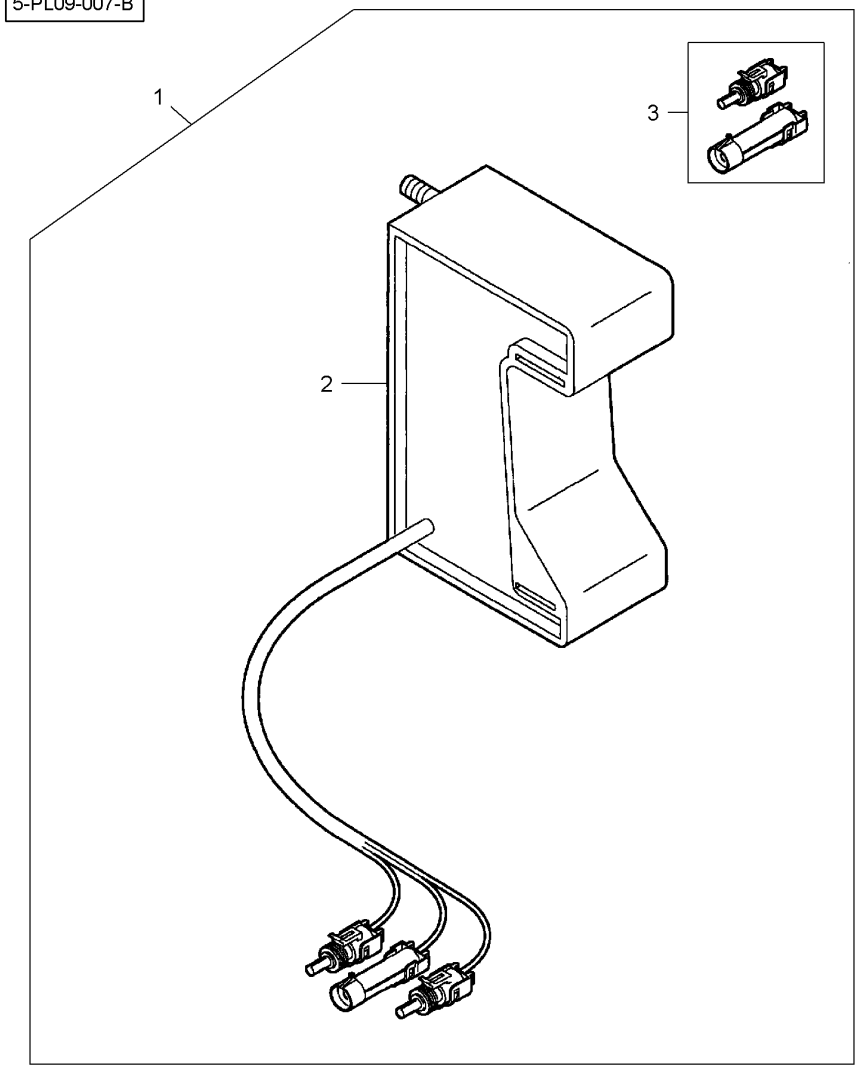


| | | | | | |
|---|---|---|---|---|---|
| 1 | 6100280 | | **1** KIT, ATTACHMENT | JEU ACCESSOIRES<br>KIT ACCESSORI | SATZ ANBAUTEILE<br>JUEGO ACCESORIO |
| 2 | N856387 | 1 | **1** SENSOR | DETECTEUR<br>SENSORE | SENSOR<br>DETECTOR |
| 3 | N857249 | 2 | **1** INTAKE | PRISE<br>ASPIRAZIONE | SAUGROHR<br>ENTRADA |

| Electrical Equipment<br>Equipement Electrique<br>Elektrische Anlage<br>Impianto Elettrico<br>Instalacion Electrica | 90-105 | Harness<br>Faisceau<br>Kabelbaum<br>Fascio<br>Haz |
|---|---|---|

5-PL09-012-B

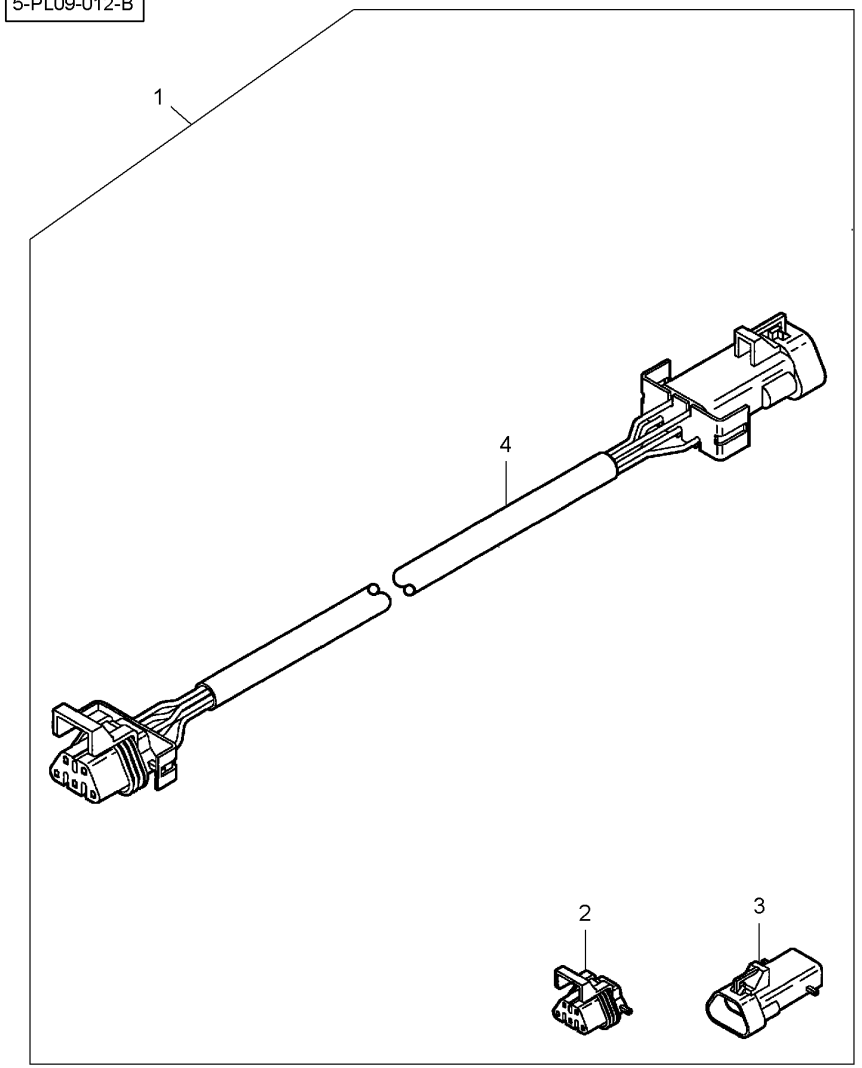


| | | | | | | |
|---|---|---|---|---|---|---|
| 1 | 6100271 | ◀▶ 910 mm | **1** | KIT, ATTACHMENT | JEU ACCESSOIRES<br>KIT ACCESSORI | SATZ ANBAUTEILE<br>JUEGO ACCESORIO |
| 1 | 6100270 | ◀▶ 3050 mm | **1** | KIT, ATTACHMENT | JEU ACCESSOIRES<br>KIT ACCESSORI | SATZ ANBAUTEILE<br>JUEGO ACCESORIO |
| 1 | 6100279 | ◀▶ 4570 mm | **1** | KIT, ATTACHMENT | JEU ACCESSOIRES<br>KIT ACCESSORI | SATZ ANBAUTEILE<br>JUEGO ACCESORIO |
| 1 | 6100269 | ◀▶ 6090 mm | **1** | KIT, ATTACHMENT | JEU ACCESSOIRES<br>KIT ACCESSORI | SATZ ANBAUTEILE<br>JUEGO ACCESORIO |
| 1 | 6100268 | ◀▶ 9140 mm | **1** | KIT, ATTACHMENT | JEU ACCESSOIRES<br>KIT ACCESSORI | SATZ ANBAUTEILE<br>JUEGO ACCESORIO |
| 1 | 6100278 | ◀▶ 12190 mm | **1** | KIT, ATTACHMENT | JEU ACCESSOIRES<br>KIT ACCESSORI | SATZ ANBAUTEILE<br>JUEGO ACCESORIO |
| 2 | N857252 | 1 | **1** | ELECTRICAL PLUG | PRISE ELECT MALE<br>PRESAELETTRICI M | STECKER<br>TOMACORRIENTE M |
| 3 | N857251 | 1 | **1** | ELECTRIC SOCKET | PRISE ELEC FEMEL<br>PRESAELETTRIC F | STECKDOSE<br>TOMACORRIENTE F |
| 4 | N856508 | 1 ◀▶ 0,91 M | **1** | HARNESS | FAISCEAU<br>FASCIOCAVI | KABELBAUM<br>MAZO CABLES |
| 4 | N856507 | 1 ◀▶ 3,05 M | **1** | HARNESS | FAISCEAU<br>FASCIOCAVI | KABELBAUM<br>MAZO CABLES |
| 4 | N856341 | 1 ◀▶ 4,57 M | **1** | HARNESS | FAISCEAU<br>FASCIOCAVI | KABELBAUM<br>MAZO CABLES |
| 4 | N856506 | 1 ◀▶ 6,09 M | **1** | HARNESS | FAISCEAU<br>FASCIOCAVI | KABELBAUM<br>MAZO CABLES |
| 4 | N856505 | 1 ◀▶ 9,14 M | **1** | HARNESS | FAISCEAU<br>FASCIOCAVI | KABELBAUM<br>MAZO CABLES |
| 4 | N856327 | 1 ◀▶ 12,19 M | **1** | HARNESS | FAISCEAU<br>FASCIOCAVI | KABELBAUM<br>MAZO CABLES |

**Electrical Equipment**
**Equipement Electrique**
**Elektrische Anlage**
**Impianto Elettrico**
**Instalacion Electrica**

**90-110**

5-PL09-013-A

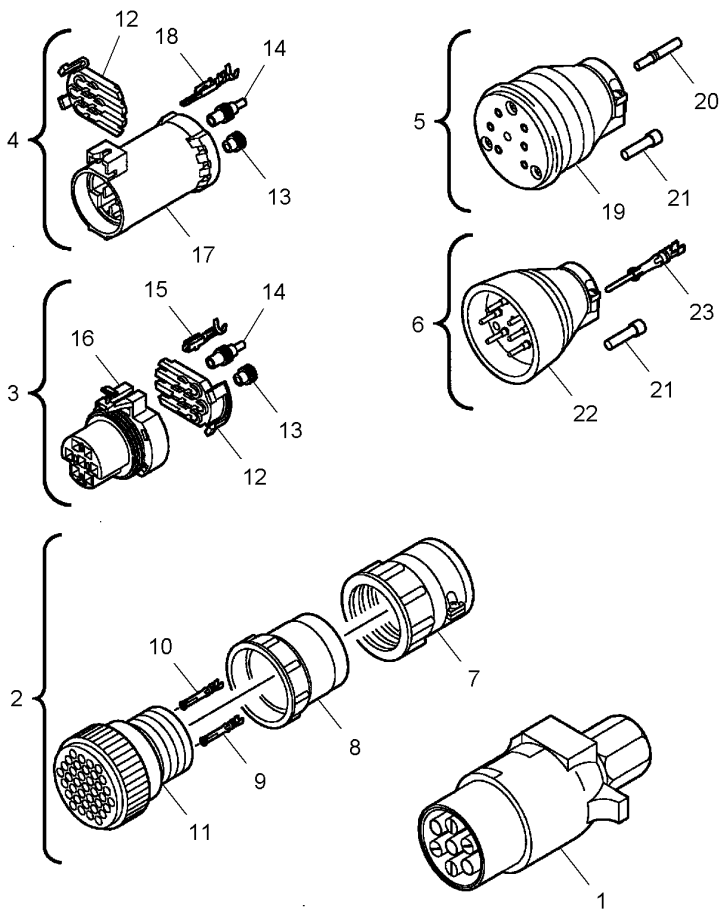


| | | | | | |
|---|---|---|---|---|---|
| 1* | 700714649 | | 1 | PLUG 7 PIN SUP | PRISE MALE 7 BR<br>SPINA DA 7 | STECKER 7P ENTST<br>TOMA 7 ESPIG SUP |
| 2* | 855447 | | 1 | ELECTRIC SOCKET | PRISE ELEC FEMEL<br>PRESAELETTRIC F | STECKDOSE<br>TOMACORRIENTE F |
| 3* | 700721096 | | 1 | ELECTRICAL PLUG | PRISE ELECT MALE<br>PRESAELETTRICI M | STECKER<br>TOMACORRIENTE M |
| 4* | 700721095 | | 1 | ELECTRIC SOCKET | PRISE ELEC FEMEL<br>PRESAELETTRIC F | STECKDOSE<br>TOMACORRIENTE F |
| 5* | N857480 | | 1 | ELECTRIC SOCKET | PRISE ELEC FEMEL<br>PRESAELETTRIC F | STECKDOSE<br>TOMACORRIENTE F |
| 6* | N857479 | | 1 | ELECTRICAL PLUG | PRISE ELECT MALE<br>PRESAELETTRICI M | STECKER<br>TOMACORRIENTE M |
| 7* | 72514691 | | X | BODY | CORPS<br>CORPO | RUMPF<br>CUERPO |
| 8* | 854907 | | X | EXTENSION | RALLONGE<br>PROLUNGA | VERLAENGERUNG<br>ENSANCHE |
| 9* | 700718607 | 14-18 Gauge | X | CONNECTOR | BORNE.<br>MORSETTO. | DOPPELNIPPEL<br>CONECTOR |
| 10* | 700718608 | 20-24 Gauge | X | CONNECTOR | BORNE.<br>MORSETTO. | DOPPELNIPPEL<br>CONECTOR |
| 11* | 72514681 | | X | CONNECTOR | BORNE.<br>MORSETTO. | DOPPELNIPPEL<br>CONECTOR |
| 12* | 700720587 | | X | LOCK | SERRURE<br>SERRATURA | SCHLOSS<br>CERRADURA |
| 13* | 71398851 | | X | SEAL | JOINT ETANCHEITE<br>GIUNTO ROTONDO | DICHTRING<br>JUNTA REDONDA |
| 14* | 700714829 | | X | PLUG | BOUCHON<br>TAPPO | STOPFEN<br>TAPON |
| 15* | 700724048 | | X | CONNECTOR | BORNE.<br>MORSETTO. | DOPPELNIPPEL<br>CONECTOR |
| 16* | 71399230 | | X | CONNECTOR | BORNE.<br>MORSETTO. | DOPPELNIPPEL<br>CONECTOR |
| 17* | 700723989 | | X | CONNECTOR | BORNE.<br>MORSETTO. | DOPPELNIPPEL<br>CONECTOR |
| 18* | 700724049 | | X | CONNECTORS | CONNECTEUR<br>MORSETTI | KABELVERBINDER<br>CONECTADORES |
| 19* | N855873 | | X | CONNECTOR | BORNE.<br>MORSETTO. | DOPPELNIPPEL<br>CONECTOR |
| 20* | N857482 | | X | CONNECTOR | BORNE.<br>MORSETTO. | DOPPELNIPPEL<br>CONECTOR |
| 21* | N858677 | | X | PLUG | BOUCHON<br>TAPPO | STOPFEN<br>TAPON |
| 22* | N855872 | | X | CONNECTOR | BORNE.<br>MORSETTO. | DOPPELNIPPEL<br>CONECTOR |
| 23* | N857481 | | X | CONNECTORS | CONNECTEUR<br>MORSETTI | KABELVERBINDER<br>CONECTADORES |

**Electrical Equipment**
**Equipement Electrique**
**Elektrische Anlage**
**Impianto Elettrico**
**Instalacion Electrica**

**90-115**

5-PL09-014-A

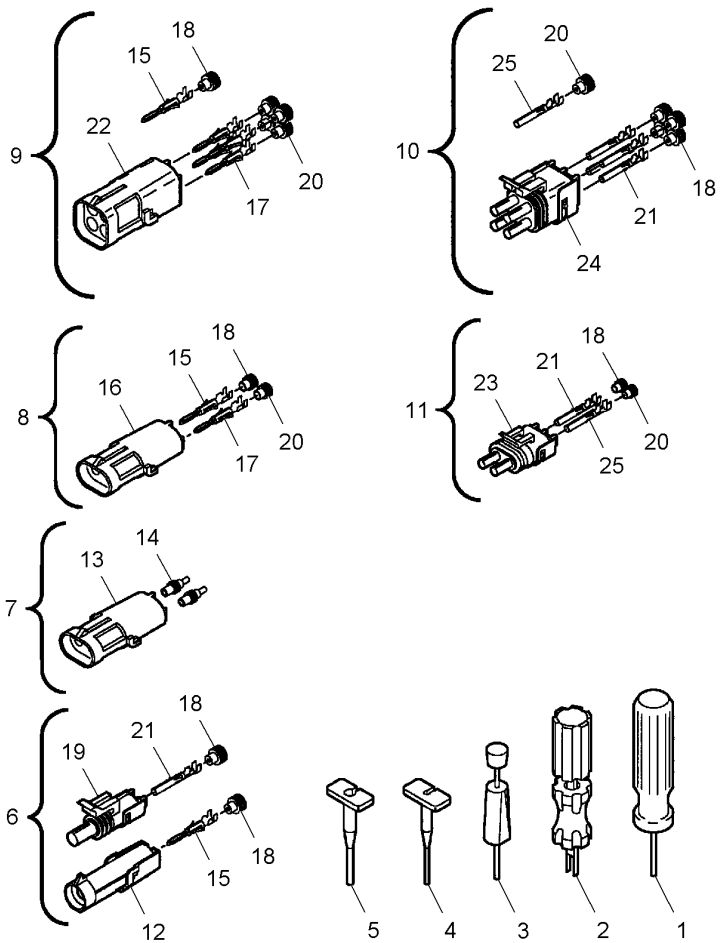


| | | | | | |
|---|---|---|---|---|---|
| 1* | 700707012 | | 1 | TOOL | OUTIL<br>UTENSILE |
| 2* | 700707014 | | 1 | TOOL | OUTIL<br>UTENSILE |
| 3* | 700707013 | | 1 | TOOL | OUTIL<br>UTENSILE |
| 4* | 71390806 | 20-24 Gauge | 1 | TOOL | OUTIL<br>UTENSILE |
| 5* | 71390809 | 14-16 Gauge | 1 | TOOL | OUTIL<br>UTENSILE |
| 6* | N857249 | | 1 | INTAKE | PRISE<br>ASPIRAZIONE |
| 7* | 700716345 | | 1 | ELECTRIC SOCKET | PRISE ELEC FEMEL<br>PRESAELETTRIC F |
| 8* | 855425 | | 1 | ELECTRIC SOCKET | PRISE ELEC FEMEL<br>PRESAELETTRIC F |
| 9* | 700728336 | | 1 | ELECTRIC SOCKET | PRISE ELEC FEMEL<br>PRESAELETTRIC F |
| 10* | 855434 | | 1 | ELECTRICAL PLUG | PRISE ELECT MALE<br>PRESAELETTRICI M |
| 11* | 855426 | | 1 | ELECTRICAL PLUG | PRISE ELECT MALE<br>PRESAELETTRICI M |
| 12* | 700718620 | | X | CONNECTOR | BORNE.<br>MORSETTO. |
| 13* | 700706399 | | X | CONNECTOR | BORNE.<br>MORSETTO. |
| 14* | 700714829 | | X | PLUG | BOUCHON<br>TAPPO |
| 15* | 700706401 | 18-20 Gauge | X | THIMBLE | COSSE<br>BUSSOLA |
| 16* | 700706399 | | X | CONNECTOR | BORNE.<br>MORSETTO. |
| 17* | 855424 | 14-16 Gauge | X | CONNECTORS | CONNECTEUR<br>MORSETTI |
| 18* | 700706400 | 18-20 Gauge | X | SEAL | JOINT ETANCHEITE<br>GIUNTO ROTONDO |
| 19* | 700718579 | | X | CONNECTOR | BORNE.<br>MORSETTO. |
| 20* | 700712467 | 14-16 Gauge | X | SEAL | JOINT ETANCHEITE<br>GIUNTO ROTONDO |
| 21* | 700708760 | 18-20 Gauge | X | THIMBLE | COSSE<br>BUSSOLA |
| 22* | 700728335 | | X | CONNECTOR | BORNE.<br>MORSETTO. |
| 23* | 700708761 | | X | CONNECTOR | BORNE.<br>MORSETTO. |
| 24* | 700725254 | | X | CONNECTOR | BORNE.<br>MORSETTO. |
| 25* | 855423 | 14-16 Gauge | X | CONNECTORS | CONNECTEUR<br>MORSETTI |

| | | | | | |
|---|---|---|---|---|---|
| | | | | | WERKZEUG<br>HERRAMIENTA |
| | | | | | WERKZEUG<br>HERRAMIENTA |
| | | | | | WERKZEUG<br>HERRAMIENTA |
| | | | | | WERKZEUG<br>HERRAMIENTA |
| | | | | | WERKZEUG<br>HERRAMIENTA |
| | | | | | SAUGROHR<br>ENTRADA |
| | | | | | STECKDOSE<br>TOMACORRIENTE F |
| | | | | | STECKDOSE<br>TOMACORRIENTE F |
| | | | | | STECKDOSE<br>TOMACORRIENTE F |
| | | | | | STECKER<br>TOMACORRIENTE M |
| | | | | | STECKER<br>TOMACORRIENTE M |
| | | | | | DOPPELNIPPEL<br>CONECTOR |
| | | | | | DOPPELNIPPEL<br>CONECTOR |
| | | | | | STOPFEN<br>TAPON |
| | | | | | MUFFE<br>DEDAL |
| | | | | | DOPPELNIPPEL<br>CONECTOR |
| | | | | | KABELVERBINDER<br>CONECTADORES |
| | | | | | DICHTRING<br>JUNTA REDONDA |
| | | | | | DOPPELNIPPEL<br>CONECTOR |
| | | | | | DICHTRING<br>JUNTA REDONDA |
| | | | | | MUFFE<br>DEDAL |
| | | | | | DOPPELNIPPEL<br>CONECTOR |
| | | | | | DOPPELNIPPEL<br>CONECTOR |
| | | | | | DOPPELNIPPEL<br>CONECTOR |
| | | | | | KABELVERBINDER<br>CONECTADORES |

**Electrical Equipment**
**Equipement Electrique**
**Elektrische Anlage**
**Impianto Elettrico**
**Instalacion Electrica**

**90-120**

5-PL09-015-A

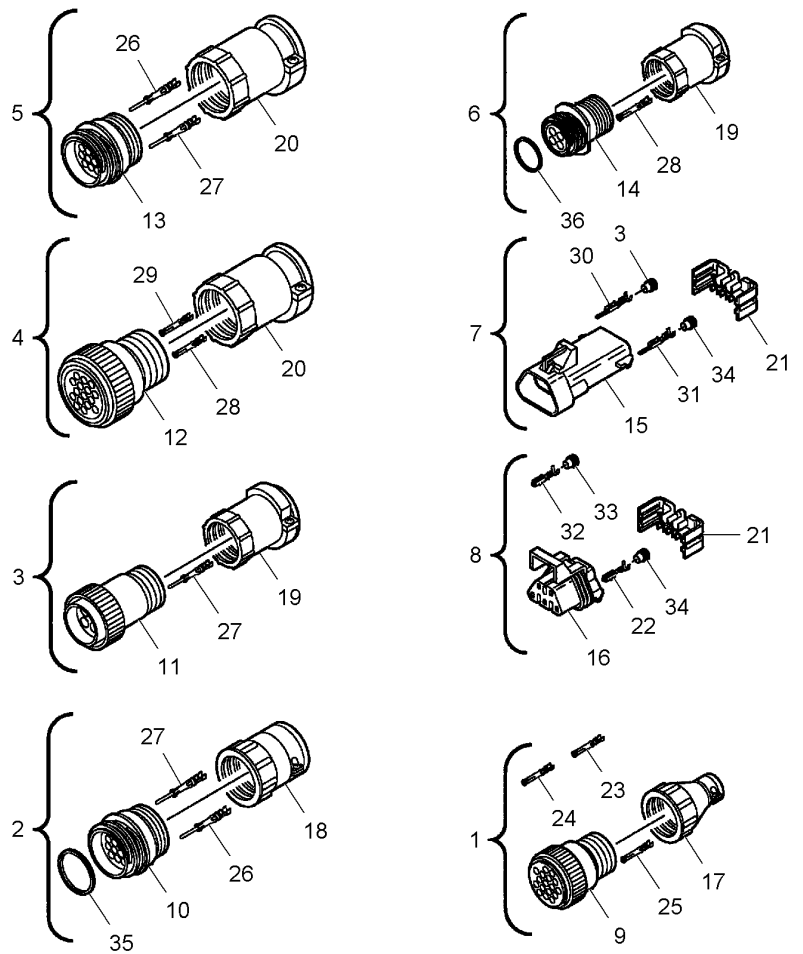


| | | | | | |
|---|---|---|---|---|---|
| 1* | N857247 | | 1 | ELECTRIC SOCKET | PRISE ELEC FEMEL<br>PRESAELETTRIC F | STECKDOSE<br>TOMACORRIENTE F |
| 2* | 855448 | | 1 | ELECTRICAL PLUG | PRISE ELECT MALE<br>PRESAELETTRICI M | STECKER<br>TOMACORRIENTE M |
| 3* | 855436 | | 1 | ELECTRICAL PLUG | PRISE ELECT MALE<br>PRESAELETTRICI M | STECKER<br>TOMACORRIENTE M |
| 4* | 855443 | | 1 | ELECTRIC SOCKET | PRISE ELEC FEMEL<br>PRESAELETTRIC F | STECKDOSE<br>TOMACORRIENTE F |
| 5* | 855439 | | 1 | ELECTRICAL PLUG | PRISE ELECT MALE<br>PRESAELETTRICI M | STECKER<br>TOMACORRIENTE M |
| 6* | N855437 | | 1 | ELECTRIC SOCKET | PRISE ELEC FEMEL<br>PRESAELETTRIC F | STECKDOSE<br>TOMACORRIENTE F |
| 7* | N857251 | | 1 | ELECTRIC SOCKET | PRISE ELEC FEMEL<br>PRESAELETTRIC F | STECKDOSE<br>TOMACORRIENTE F |
| 8* | N857252 | | 1 | ELECTRICAL PLUG | PRISE ELECT MALE<br>PRESAELETTRICI M | STECKER<br>TOMACORRIENTE M |
| 9* | N856899 | | X | CONNECTOR | BORNE.<br>MORSETTO. | DOPPELNIPPEL<br>CONECTOR |
| 10* | 700718604 | | X | PLUG | BOUCHON<br>TAPPO | STOPFEN<br>TAPON |
| 11* | 851211 | | X | CONNECTOR | BORNE.<br>MORSETTO. | DOPPELNIPPEL<br>CONECTOR |
| 12* | 700708755 | | X | PLUG | BOUCHON<br>TAPPO | STOPFEN<br>TAPON |
| 13* | 855440 | | X | CONNECTOR | BORNE.<br>MORSETTO. | DOPPELNIPPEL<br>CONECTOR |
| 14* | 855438 | | X | CONNECTOR | BORNE.<br>MORSETTO. | DOPPELNIPPEL<br>CONECTOR |
| 15* | N857455 | | X | CONNECTOR | BORNE.<br>MORSETTO. | DOPPELNIPPEL<br>CONECTOR |
| 16* | N857461 | | X | CONNECTOR | BORNE.<br>MORSETTO. | DOPPELNIPPEL<br>CONECTOR |
| 17* | N856938 | | X | BODY | CORPS<br>CORPO | RUMPF<br>CUERPO |
| 18* | 72514691 | | X | BODY | CORPS<br>CORPO | RUMPF<br>CUERPO |
| 19* | 700713576 | | X | BODY | CORPS<br>CORPO | RUMPF<br>CUERPO |
| 20* | 72514690 | | X | BODY | CORPS<br>CORPO | RUMPF<br>CUERPO |
| 21* | N857460 | | X | LOCK | SERRURE<br>SERRATURA | SCHLOSS<br>CERRADURA |
| 22* | N857462 | 20-22 Gauge | X | THIMBLE | COSSE<br>BUSSOLA | MUFFE<br>DEDAL |
| 23* | N856910 | 14-16 Gauge | X | THIMBLE | COSSE<br>BUSSOLA | MUFFE<br>DEDAL |
| 24* | N856909 | 16-20 Gauge | X | THIMBLE | COSSE<br>BUSSOLA | MUFFE<br>DEDAL |
| 25* | N856908 | 20-22 Gauge | X | THIMBLE | COSSE<br>BUSSOLA | MUFFE<br>DEDAL |
| 26* | 851209 | 14-18 Gauge | X | THIMBLE | COSSE<br>BUSSOLA | MUFFE<br>DEDAL |

**Electrical Equipment**
**Equipement Electrique**
**Elektrische Anlage**
**Impianto Elettrico**
**Instalacion Electrica**

**90-120**

5-PL09-015-A

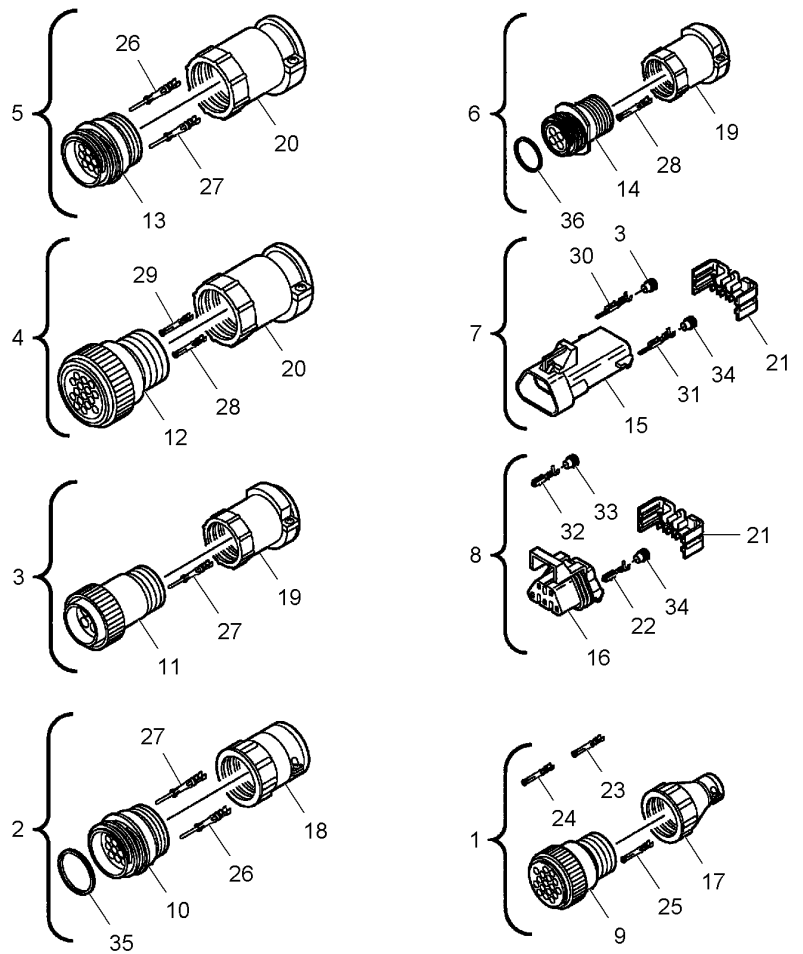


| | | | | |
|---|---|---|---|---|
| 27* 851208 | 20-24 Gauge | X THIMBLE | COSSE<br>BUSSOLA | MUFFE<br>DEDAL |
| 28* 851194 | 20-24 Gauge | X THIMBLE | COSSE<br>BUSSOLA | MUFFE<br>DEDAL |
| 29* 851200 | 14-18 Gauge | X THIMBLE | COSSE<br>BUSSOLA | MUFFE<br>DEDAL |
| 30* N857457 | 18-20 Gauge | X THIMBLE | COSSE<br>BUSSOLA | MUFFE<br>DEDAL |
| 31* N857456 | 20-22 Gauge | X THIMBLE | COSSE<br>BUSSOLA | MUFFE<br>DEDAL |
| 32* N857463 | 18-20 Gauge | X THIMBLE | COSSE<br>BUSSOLA | MUFFE<br>DEDAL |
| 33* N857458 | | X SEAL | JOINT ETANCHEITE<br>GIUNTO ROTONDO | DICHTRING<br>JUNTA REDONDA |
| 34* N857459 | | X SEAL | JOINT ETANCHEITE<br>GIUNTO ROTONDO | DICHTRING<br>JUNTA REDONDA |
| 35* 700711660 | | X SEAL | JOINT ETANCHEITE<br>GIUNTO ROTONDO | DICHTRING<br>JUNTA REDONDA |
| 36* 700712102 | | X SEAL | JOINT ETANCHEITE<br>GIUNTO ROTONDO | DICHTRING<br>JUNTA REDONDA |

**Electrical Equipment**
**Equipement Electrique**
**Elektrische Anlage**
**Impianto Elettrico**
**Instalacion Electrica**

**90-125**

5-PL09-016-A

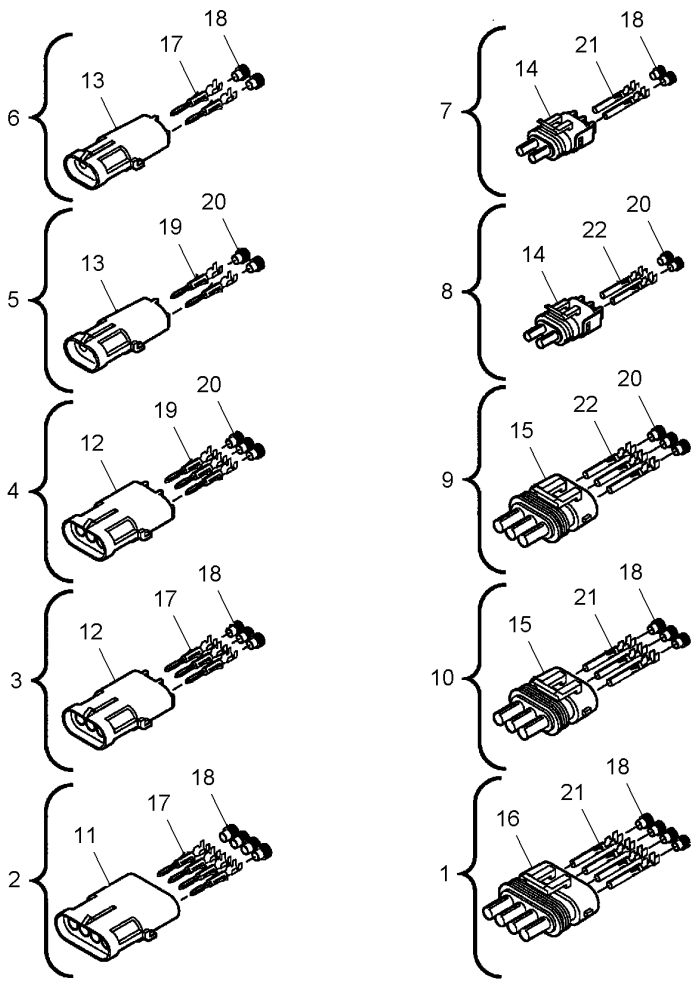


| | | | | | |
|---|---|---|---|---|---|
| 1* | 700707002 | | 1 | ELECTRICAL PLUG | PRISE ELECT MALE<br>PRESAELETTRICI M | STECKER<br>TOMACORRIENTE M |
| 2* | 700709354 | | 1 | ELECTRIC SOCKET | PRISE ELEC FEMEL<br>PRESAELETTRIC F | STECKDOSE<br>TOMACORRIENTE F |
| 3* | 700718599 | | 1 | ELECTRIC SOCKET | PRISE ELEC FEMEL<br>PRESAELETTRIC F | STECKDOSE<br>TOMACORRIENTE F |
| 4* | 700718531 | | 1 | ELECTRIC SOCKET | PRISE ELEC FEMEL<br>PRESAELETTRIC F | STECKDOSE<br>TOMACORRIENTE F |
| 5* | 700718588 | | 1 | ELECTRIC SOCKET | PRISE ELEC FEMEL<br>PRESAELETTRIC F | STECKDOSE<br>TOMACORRIENTE F |
| 6* | 700708753 | | 1 | ELECTRIC SOCKET | PRISE ELEC FEMEL<br>PRESAELETTRIC F | STECKDOSE<br>TOMACORRIENTE F |
| 7* | 700706999 | | 1 | ELECTRICAL PLUG | PRISE ELECT MALE<br>PRESAELETTRICI M | STECKER<br>TOMACORRIENTE M |
| 8* | 700718590 | | 1 | ELECTRICAL PLUG | PRISE ELECT MALE<br>PRESAELETTRICI M | STECKER<br>TOMACORRIENTE M |
| 9* | 700718582 | | 1 | ELECTRICAL PLUG | PRISE ELECT MALE<br>PRESAELETTRICI M | STECKER<br>TOMACORRIENTE M |
| 10* | 700707001 | | 1 | ELECTRICAL PLUG | PRISE ELECT MALE<br>PRESAELETTRICI M | STECKER<br>TOMACORRIENTE M |
| 11* | 700708964 | | X | CONNECTOR | BORNE.<br>MORSETTO. | DOPPELNIPPEL<br>CONECTOR |
| 12* | 700706413 | | X | CONNECTOR | BORNE.<br>MORSETTO. | DOPPELNIPPEL<br>CONECTOR |
| 13* | 700706399 | | X | CONNECTOR | BORNE.<br>MORSETTO. | DOPPELNIPPEL<br>CONECTOR |
| 14* | 700708761 | | X | CONNECTOR | BORNE.<br>MORSETTO. | DOPPELNIPPEL<br>CONECTOR |
| 15* | 700709175 | | X | CONNECTOR | BORNE.<br>MORSETTO. | DOPPELNIPPEL<br>CONECTOR |
| 16* | 700708963 | | X | CONNECTOR | BORNE.<br>MORSETTO. | DOPPELNIPPEL<br>CONECTOR |
| 17* | 700706401 | 18-20 Gauge | X | THIMBLE | COSSE<br>BUSSOLA | MUFFE<br>DEDAL |
| 18* | 700706400 | 18-20 Gauge | X | SEAL | JOINT ETANCHEITE<br>GIUNTO ROTONDO | DICHTRING<br>JUNTA REDONDA |
| 19* | 700718530 | 16 Gauge | X | THIMBLE | COSSE<br>BUSSOLA | MUFFE<br>DEDAL |
| 20* | 700712467 | 16 Gauge | X | SEAL | JOINT ETANCHEITE<br>GIUNTO ROTONDO | DICHTRING<br>JUNTA REDONDA |
| 21* | 700708760 | 18-20 Gauge | X | THIMBLE | COSSE<br>BUSSOLA | MUFFE<br>DEDAL |
| 22* | 700718576 | 16 Gauge | X | THIMBLE | COSSE<br>BUSSOLA | MUFFE<br>DEDAL |

100

| | | | |
|---|---|---|---|
| **Liquid Fertilizer Distributor** | **Pump** | **100-5** | **6 Row** |
| **Distributeur D'Engrais Liquides** | **Pompe** | | **6 Rangs** |
| **Gerät Zum Ausbringen Von Flüssigdünger** | **Pumpe** | | **6 Reihes** |
| **Spanditrice Di Concimi Liquidi** | **Pompa** | | **6 Lineas** |
| **Distribuidora De Abonos Liquidos** | **Bomba** | | **6 Lineas** |

5-PL58-002-B

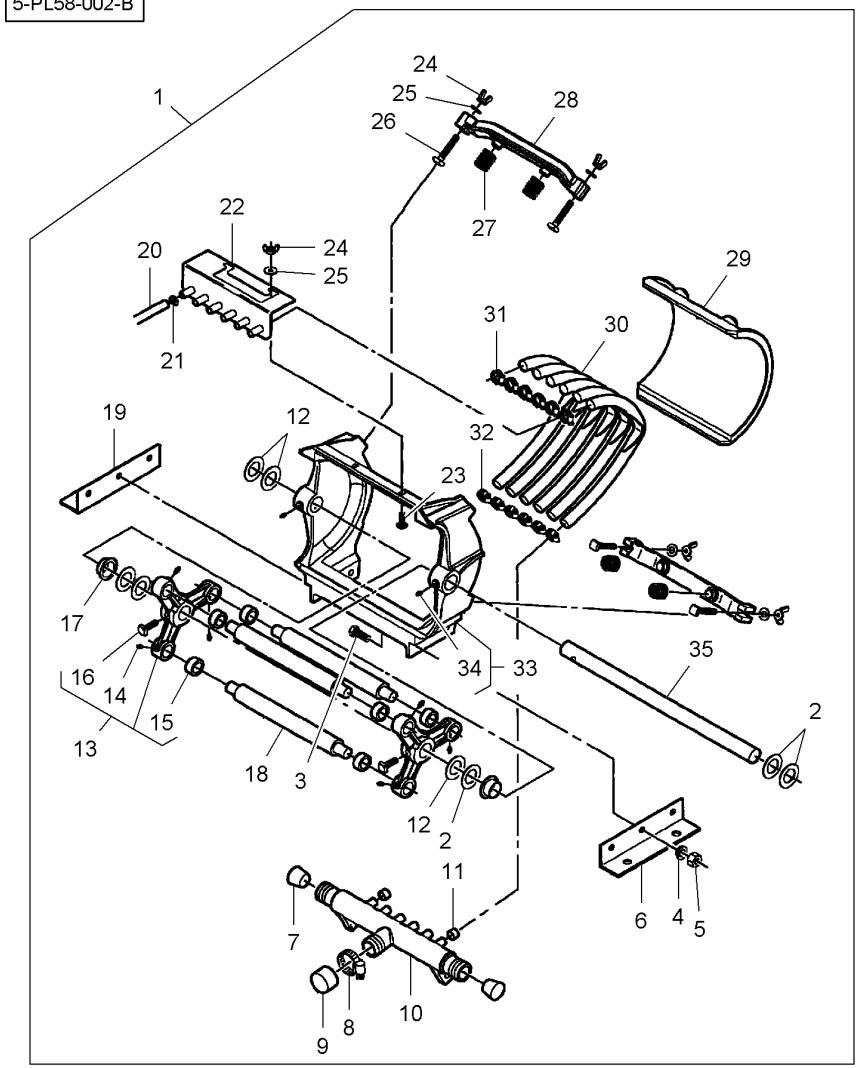


| | | | | | | |
|---|---|---|---|---|---|---|
| 1 | 2086019 | | | **1** PUMP | POMPE<br>POMPA | PUMPE<br>BOMBA |
| 2 | W246607B | 1 | | **4** SHIM | CALE REGLAGE<br>SPESSORE | AUSGLEICHSCHEIBE<br>CALCE |
| 3 | W908331-4 | 1 | 3/8"-16 X 7/8 | **6** CAPSCREW | VIS BOUCHON<br>TAPPO A VITE | HUTSCHRAUBE<br>TORNILLO TAPON |
| 4 | 353434X1 | 1 | 3/8" | **6** LOCK WASHER | RONDELLE FREIN<br>RONDELLA ARRESTO | SICHERUNGSRING<br>ARANDELA SEGURID |
| 5 | 355566X1 | 1 | 3/8"-16 | **6** NUT UNC | ECROU UNC<br>DADO UNC | MUTTER UNC<br>TUERCA UNC |
| 6 | CR279 | 1 ◀ | | **1** SUPPORT | SUPPORT<br>SOPPORTO | TRAGER<br>SOPORTE |
| 7 | W246610B | 1 | | **2** PLUG | BOUCHON<br>TAPPO | STOPFEN<br>TAPON |
| 8 | 364125X1 | 1 | ∅ 20-44 | **1** HOSE CLIP | COLLIER DURITE<br>COLLARE DI TUBO | SCHLAUCHBINDER<br>ABRAZADERA TUBO |
| 9 | W248493B | 1 | | **1** PLUG | BOUCHON<br>TAPPO | STOPFEN<br>TAPON |
| 10 | W246602B | 1 | | **1** MANIFOLD | COLLECTEUR<br>COLLETTORE | STEUERGEHAEUSE<br>COLECTOR |
| 11 | W246326B | 1 | | **2** PLUG | BOUCHON<br>TAPPO | STOPFEN<br>TAPON |
| 12 | W247091B | 1 | | **4** SHIM | CALE REGLAGE<br>SPESSORE | AUSGLEICHSCHEIBE<br>CALCE |
| 13 | W246604B | 1 | | **2** ARM | BRAS<br>BRACCIO | SCHARHEBEL<br>BRAZO |
| 14 | 70930680 | 13 | | **3** PIN | GOUPILLE<br>COPPIGLIA | STIFT<br>PASADOR |
| 15 | W246608B | 13 | | **3** BUSH | BAGUE<br>BOCCOLA | RING<br>CASQUILLO |
| 16 | 70920469 | 13 | 3/8"-16 X 3/4 | **1** SETSCREW | VIS DE BLOCAGE<br>INSIEME VITI | STELLSCHRAUBE<br>SET SCREW |
| 17 | W246695B | 1 | | **2** BUSH | BAGUE<br>BOCCOLA | RING<br>CASQUILLO |
| 18 | W248073B | 1 | | **3** ROLLER | GALET<br>ROTELLA | ROLLE<br>RODILLO |
| 19 | CR280 | 1 ▶ | | **1** SUPPORT | SUPPORT<br>SOPPORTO | TRAGER<br>SOPORTE |
| 20 | W246823B | 1 | | **1** HOSE | DURITE<br>TUBO FLESSIBILE | SCHLAUCH<br>TUBO DE GOMA |
| 21 | 70921910 | 1 | | **6** HOSE CLIP | COLLIER DURITE<br>COLLARE DI TUBO | SCHLAUCHBINDER<br>ABRAZADERA TUBO |
| 22 | W246600B | 1 | | **1** MANIFOLD | COLLECTEUR<br>COLLETTORE | STEUERGEHAEUSE<br>COLECTOR |
| 23 | 364534X1 | 1 | 5/16"-18 X 1 | **2** BOLT UNC | BOULON UNC<br>BULLONE UNC | MASCH.SCHRB.UNC<br>PERNO UNC |
| 24 | K2846 | 1 | 5/16"-18 | **6** NUT | ECROU<br>DADO | MUTTER<br>TUERCA |
| 25 | 700717619 | 1 | | **6** WASHER | RONDELLE<br>RONDELLA | SCHEIBE<br>ARANDELA |
| 26 | 14783 | 1 | 5/16"-18 X1-3/4 | **4** BOLT | BOULON<br>BULLONE | BOLZEN<br>BULON |

| | | | |
|---|---|---|---|
| **Liquid Fertilizer Distributor** | **Pump** | **100-5** | **6 Row** |
| **Distributeur D'Engrais Liquides** | **Pompe** | | **6 Rangs** |
| **Gerät Zum Ausbringen Von Flüssigdünger** | **Pumpe** | | **6 Reihes** |
| **Spanditrice Di Concimi Liquidi** | **Pompa** | | **6 Lineas** |
| **Distribuidora De Abonos Liquidos** | **Bomba** | | **6 Lineas** |

5-PL58-002-B

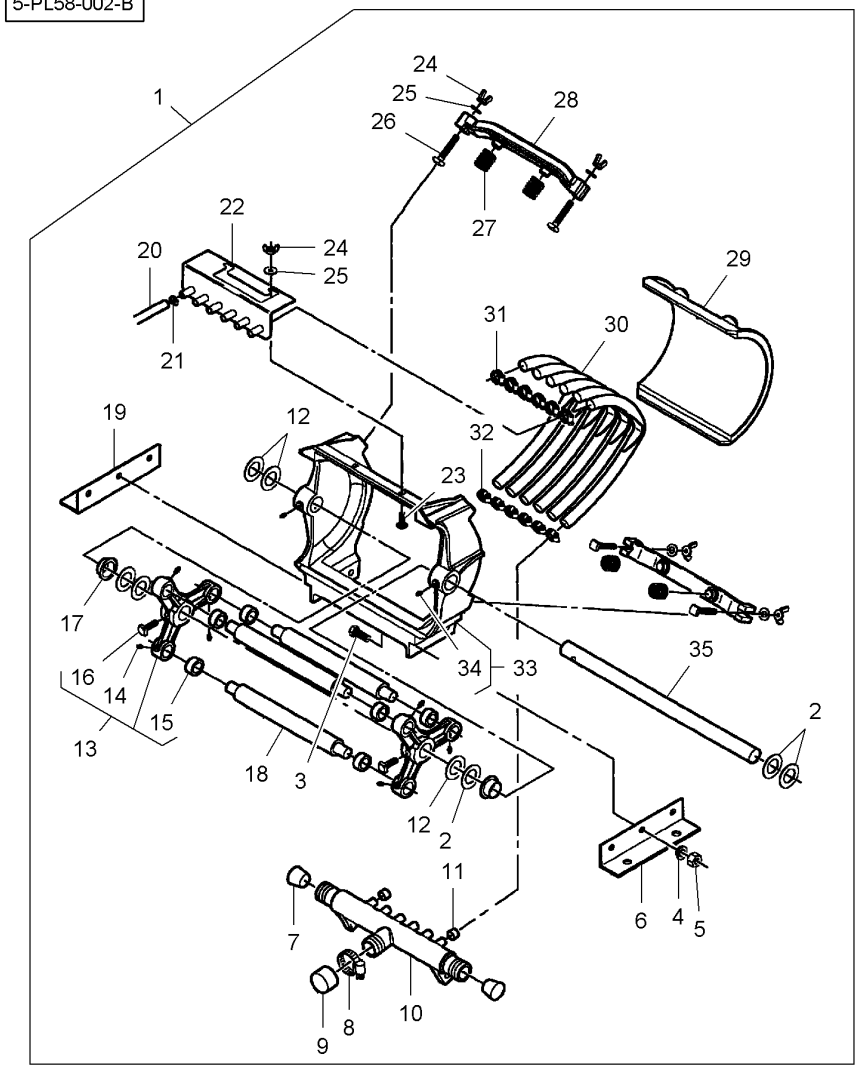


| | | | | | |
|---|---|---|---|---|---|
| 27 | W246595B | 1 | **4** SPRING | RESSORT | FEDER |
| | | | | MOLLA | MUELLE |
| 28 | W248076B | 1 | **2** BAR | BARRE | STAB |
| | | | | BARRA | BARRA |
| 29 | W248075B | 1 | **1** PLATE | PLAQUE | PLATTE |
| | | | | PIASTRA | PLATO |
| 30 | **W246534B** | 1 ◀▶ 13" | **6** HOSE | DURITE | SCHLAUCH |
| | | | | TUBO FLESSIBILE | TUBO DE GOMA |
| 31 | W246609B | 1 | **6** BUSH | BAGUE | RING |
| | | | | BOCCOLA | CASQUILLO |
| 32 | W247090B | 1 | **6** CLAMP | COLLIER | HALTESCHELLE |
| | | | | FASCETTA | ABRAZADERA |
| 33 | W248074B | 1 | **1** FRAME | BATI | RAHMEN |
| | | | | TELAIO | BASTIDOR |
| 34 | 70930680 | 33 | **2** PIN | GOUPILLE | STIFT |
| | | | | COPPIGLIA | PASADOR |
| 35 | W247880B | 1 | **1** SHAFT | ARBRE | WELLE |
| | | | | ALBERO | ARBOL |

| | | | |
|---|---|---|---|
| **Liquid Fertilizer Distributor** | **Pump** | **100-10** | **8 Row** |
| **Distributeur D'Engrais Liquides** | **Pompe** | | **8 Rangs** |
| **Gerät Zum Ausbringen Von Flüssigdünger** | **Pumpe** | | **8 Reihes** |
| **Spanditrice Di Concimi Liquidi** | **Pompa** | | **8 Lineas** |
| **Distribuidora De Abonos Liquidos** | **Bomba** | | **8 Lineas** |

5-PL58-003-B

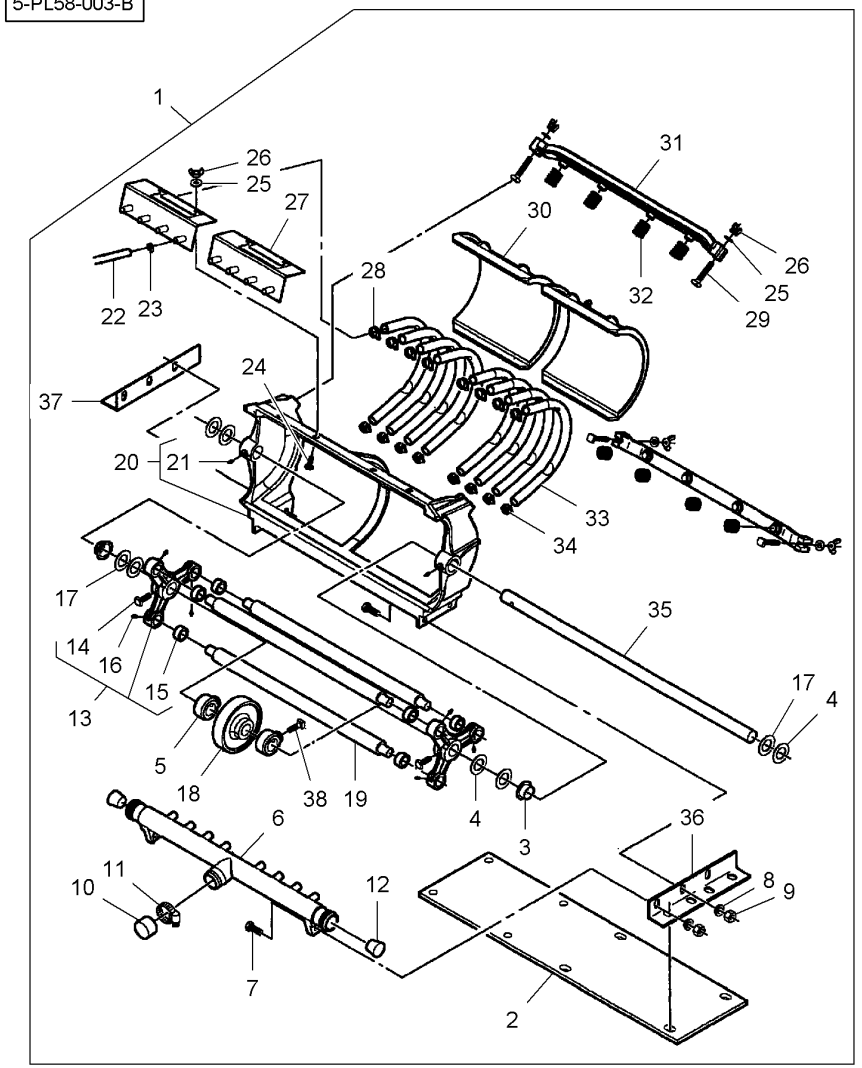


| | | | | | | |
|---|---|---|---|---|---|---|
| 1 | 2086029 | | **1** | PUMP | POMPE<br>POMPA | PUMPE<br>BOMBA |
| 2 | 851428 | 1 | **2** | PLATE | PLAQUE<br>PIASTRA | PLATTE<br>PLATO |
| 3 | W246695B | 1 | **4** | BUSH | BAGUE<br>BOCCOLA | RING<br>CASQUILLO |
| 4 | W247091B | 1 | **8** | SHIM | CALE REGLAGE<br>SPESSORE | AUSGLEICHSCHEIBE<br>CALCE |
| 5 | W246994B | 1 | **4** | COLLAR | COLLERETTE<br>COLLARE | KRAGEN<br>COLLARIN |
| 6 | W246999B | 1 | **2** | MANIFOLD | COLLECTEUR<br>COLLETTORE | STEUERGEHAEUSE<br>COLECTOR |
| 7 | 353691X1 | 1 3/8"-16 X 1 | **12** | BOLT UNC | BOULON UNC<br>BULLONE UNC | MASCH.SCHRB.UNC<br>PERNO UNC |
| 8 | 353434X1 | 1 3/8" | **12** | LOCK WASHER | RONDELLE FREIN<br>RONDELLA ARRESTO | SICHERUNGSRING<br>ARANDELA SEGURID |
| 9 | 355566X1 | 1 3/8"-16 | **12** | NUT UNC | ECROU UNC<br>DADO UNC | MUTTER UNC<br>TUERCA UNC |
| 10 | W248493B | 1 | **2** | PLUG | BOUCHON<br>TAPPO | STOPFEN<br>TAPON |
| 11 | 364125X1 | 1 ∅ 20-44 | **2** | HOSE CLIP | COLLIER DURITE<br>COLLARE DI TUBO | SCHLAUCHBINDER<br>ABRAZADERA TUBO |
| 12 | W247002B | 1 | **4** | PLUG | BOUCHON<br>TAPPO | STOPFEN<br>TAPON |
| 13 | W246604B | 1 | **4** | ARM | BRAS<br>BRACCIO | SCHARHEBEL<br>BRAZO |
| 14 | 70920469 | 13 3/8"-16 X 3/4 | **3** | SETSCREW | VIS DE BLOCAGE<br>INSIEME VITI | STELLSCHRAUBE<br>SET SCREW |
| 15 | W246608B | 13 | **3** | BUSH | BAGUE<br>BOCCOLA | RING<br>CASQUILLO |
| 16 | 70930680 | 13 | **3** | PIN | GOUPILLE<br>COPPIGLIA | STIFT<br>PASADOR |
| 17 | W246607B | 1 | **8** | SHIM | CALE REGLAGE<br>SPESSORE | AUSGLEICHSCHEIBE<br>CALCE |
| 18 | W246993B | 1 | **2** | ROLLER | GALET<br>ROTELLA | ROLLE<br>RODILLO |
| 19 | W248077B | 1 | **6** | ROLLER | GALET<br>ROTELLA | ROLLE<br>RODILLO |
| 20 | W248078B | 1 | **2** | FRAME | BATI<br>TELAIO | RAHMEN<br>BASTIDOR |
| 21 | 70930680 | 1 | **10** | PIN | GOUPILLE<br>COPPIGLIA | STIFT<br>PASADOR |
| 22 | W246823B | 1 | **1** | HOSE | DURITE<br>TUBO FLESSIBILE | SCHLAUCH<br>TUBO DE GOMA |
| 23 | 70921910 | 1 | **16** | HOSE CLIP | COLLIER DURITE<br>COLLARE DI TUBO | SCHLAUCHBINDER<br>ABRAZADERA TUBO |
| 24 | 364534X1 | 1 5/16"-18 X 1 | **8** | BOLT UNC | BOULON UNC<br>BULLONE UNC | MASCH.SCHRB.UNC<br>PERNO UNC |
| 25 | 700717619 | 1 | **16** | WASHER | RONDELLE<br>RONDELLA | SCHEIBE<br>ARANDELA |
| 26 | K2846 | 1 5/16"-18 | **16** | NUT | ECROU<br>DADO | MUTTER<br>TUERCA |

| | | | |
|---|---|---|---|
| **Liquid Fertilizer Distributor** | **Pump** | **100-10** | **8 Row** |
| **Distributeur D'Engrais Liquides** | **Pompe** | | **8 Rangs** |
| **Gerät Zum Ausbringen Von Flüssigdünger** | **Pumpe** | | **8 Reihes** |
| **Spanditrice Di Concimi Liquidi** | **Pompa** | | **8 Lineas** |
| **Distribuidora De Abonos Liquidos** | **Bomba** | | **8 Lineas** |

5-PL58-003-B

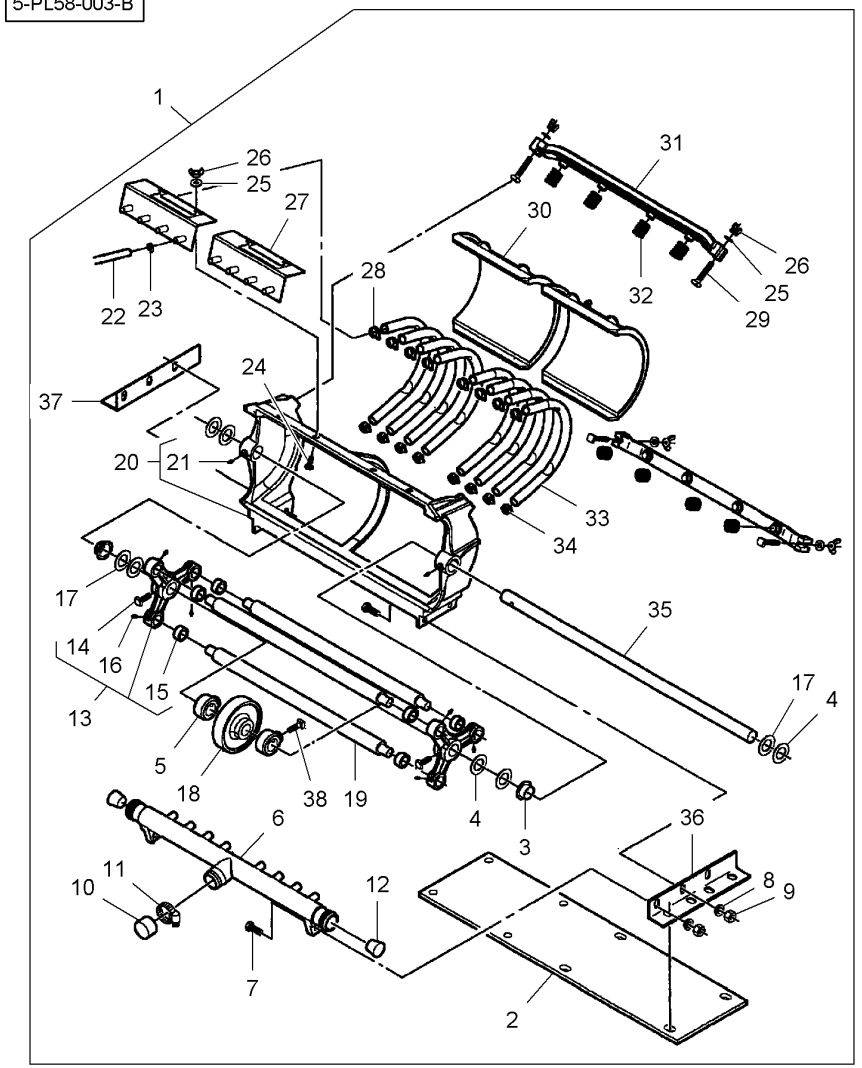


| | | | | | | |
|---|---|---|---|---|---|---|
| 27 | W246998B | 1 | | **4** | MANIFOLD | COLLECTEUR<br>COLLETTORE | STEUERGEHAEUSE<br>COLECTOR |
| 28 | W246609B | 1 | | **8** | BUSH | BAGUE<br>BOCCOLA | RING<br>CASQUILLO |
| 29 | 14783 | 1 | 5/16"-18 X1-3/4 | **8** | BOLT | BOULON<br>BULLONE | BOLZEN<br>BULON |
| 30 | W248075B | 1 | | **4** | PLATE | PLAQUE<br>PIASTRA | PLATTE<br>PLATO |
| 31 | W248079B | 1 | | **4** | BAR | BARRE<br>BARRA | STAB<br>BARRA |
| 32 | W246595B | 1 | | **16** | SPRING | RESSORT<br>MOLLA | FEDER<br>MUELLE |
| 33 | **W246534B** | 1 ◀▶ | 13" | **16** | HOSE | DURITE<br>TUBO FLESSIBILE | SCHLAUCH<br>TUBO DE GOMA |
| 34 | W247090B | 1 | | **16** | CLAMP | COLLIER<br>FASCETTA | HALTESCHELLE<br>ABRAZADERA |
| 35 | W247920B | 1 | | **2** | SHAFT | ARBRE<br>ALBERO | WELLE<br>ARBOL |
| 36 | CR279 | 1 ◀ | | **2** | SUPPORT | SUPPORT<br>SOPPORTO | TRAGER<br>SOPORTE |
| 37 | CR280 | 1 ▶ | | **2** | SUPPORT | SUPPORT<br>SOPPORTO | TRAGER<br>SOPORTE |
| 38 | 70920469 | 1 | 3/8"-16 X 3/4 | **2** | SETSCREW | VIS DE BLOCAGE<br>INSIEME VITI | STELLSCHRAUBE<br>SET SCREW |

| | | | |
|---|---|---|---|
| **Liquid Fertilizer Distributor** | **Pump** | **100-15** | **12 Rows** |
| **Distributeur D'Engrais Liquides** | **Pompe** | | **12 Rangs** |
| **Gerät Zum Ausbringen Von Flüssigdünger** | **Pumpe** | | **12 Reihes** |
| **Spanditrice Di Concimi Liquidi** | **Pompa** | | **12 Lineas** |
| **Distribuidora De Abonos Liquidos** | **Bomba** | | **12 Lineas** |

5-PL58-004-B

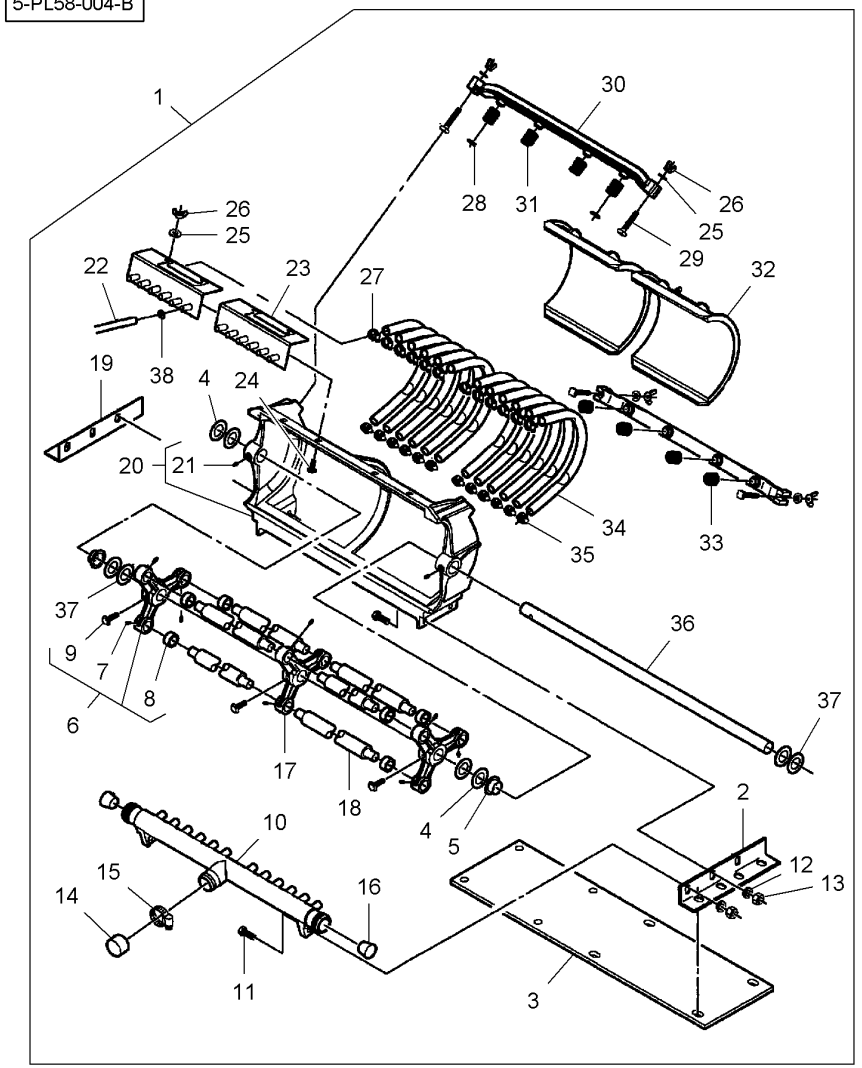


| | | | | | | |
|---|---|---|---|---|---|---|
| 1 | 2086039 | | **1** | PUMP | POMPE<br>POMPA | PUMPE<br>BOMBA |
| 2 | CR279 | 1 ◀ | **1** | SUPPORT | SUPPORT<br>SOPPORTO | TRAGER<br>SOPORTE |
| 3 | 851428 | 1 | **1** | PLATE | PLAQUE<br>PIASTRA | PLATTE<br>PLATO |
| 4 | W246607B | 1 | **4** | SHIM | CALE REGLAGE<br>SPESSORE | AUSGLEICHSCHEIBE<br>CALCE |
| 5 | W246695B | 1 | **2** | BUSH | BAGUE<br>BOCCOLA | RING<br>CASQUILLO |
| 6 | W246604B | 1 | **1** | ARM | BRAS<br>BRACCIO | SCHARHEBEL<br>BRAZO |
| 7 | 70930680 | 6 | **3** | PIN | GOUPILLE<br>COPPIGLIA | STIFT<br>PASADOR |
| 8 | W246608B | 6 | **3** | BUSH | BAGUE<br>BOCCOLA | RING<br>CASQUILLO |
| 9 | 70920469 | 6 3/8"-16 X 3/4 | **1** | SETSCREW | VIS DE BLOCAGE<br>INSIEME VITI | STELLSCHRAUBE<br>SET SCREW |
| 10 | W248081B | 1 | **1** | MANIFOLD | COLLECTEUR<br>COLLETTORE | STEUERGEHAEUSE<br>COLECTOR |
| 11 | W908331-4 | 1 3/8"-16 X 7/8 | **6** | CAPSCREW | VIS BOUCHON<br>TAPPO A VITE | HUTSCHRAUBE<br>TORNILLO TAPON |
| 12 | 353434X1 | 1 3/8" | **6** | LOCK WASHER | RONDELLE FREIN<br>RONDELLA ARRESTO | SICHERUNGSRING<br>ARANDELA SEGURID |
| 13 | 355566X1 | 1 3/8"-16 | **6** | NUT UNC | ECROU UNC<br>DADO UNC | MUTTER UNC<br>TUERCA UNC |
| 14 | W248493B | 1 | **1** | PLUG | BOUCHON<br>TAPPO | STOPFEN<br>TAPON |
| 15 | 364125X1 | 1 ∅ 20-44 | **1** | HOSE CLIP | COLLIER DURITE<br>COLLARE DI TUBO | SCHLAUCHBINDER<br>ABRAZADERA TUBO |
| 16 | W247002B | 1 | **2** | PLUG | BOUCHON<br>TAPPO | STOPFEN<br>TAPON |
| 17 | W248080B | 1 | **1** | ARM | BRAS<br>BRACCIO | SCHARHEBEL<br>BRAZO |
| 18 | W248073B | 1 | **6** | ROLLER | GALET<br>ROTELLA | ROLLE<br>RODILLO |
| 19 | CR280 | 1 ▶ | **1** | SUPPORT | SUPPORT<br>SOPPORTO | TRAGER<br>SOPORTE |
| 20 | W248078B | 1 | **1** | FRAME | BATI<br>TELAIO | RAHMEN<br>BASTIDOR |
| 21 | 70930680 | 20 | **2** | PIN | GOUPILLE<br>COPPIGLIA | STIFT<br>PASADOR |
| 22 | W246823B | 1 | **1** | HOSE | DURITE<br>TUBO FLESSIBILE | SCHLAUCH<br>TUBO DE GOMA |
| 23 | W246600B | 1 | **2** | MANIFOLD | COLLECTEUR<br>COLLETTORE | STEUERGEHAEUSE<br>COLECTOR |
| 24 | 364534X1 | 1 5/16"-18 X 1 | **4** | BOLT UNC | BOULON UNC<br>BULLONE UNC | MASCH.SCHRB.UNC<br>PERNO UNC |
| 25 | 700717619 | 1 | **8** | WASHER | RONDELLE<br>RONDELLA | SCHEIBE<br>ARANDELA |
| 26 | K2846 | 1 5/16"-18 | **8** | NUT | ECROU<br>DADO | MUTTER<br>TUERCA |

| | | | |
|---|---|---|---|
| **Liquid Fertilizer Distributor** | **Pump** | **100-15** | **12 Rows** |
| **Distributeur D'Engrais Liquides** | **Pompe** | | **12 Rangs** |
| **Gerät Zum Ausbringen Von Flüssigdünger** | **Pumpe** | | **12 Reihes** |
| **Spanditrice Di Concimi Liquidi** | **Pompa** | | **12 Lineas** |
| **Distribuidora De Abonos Liquidos** | **Bomba** | | **12 Lineas** |

5-PL58-004-B

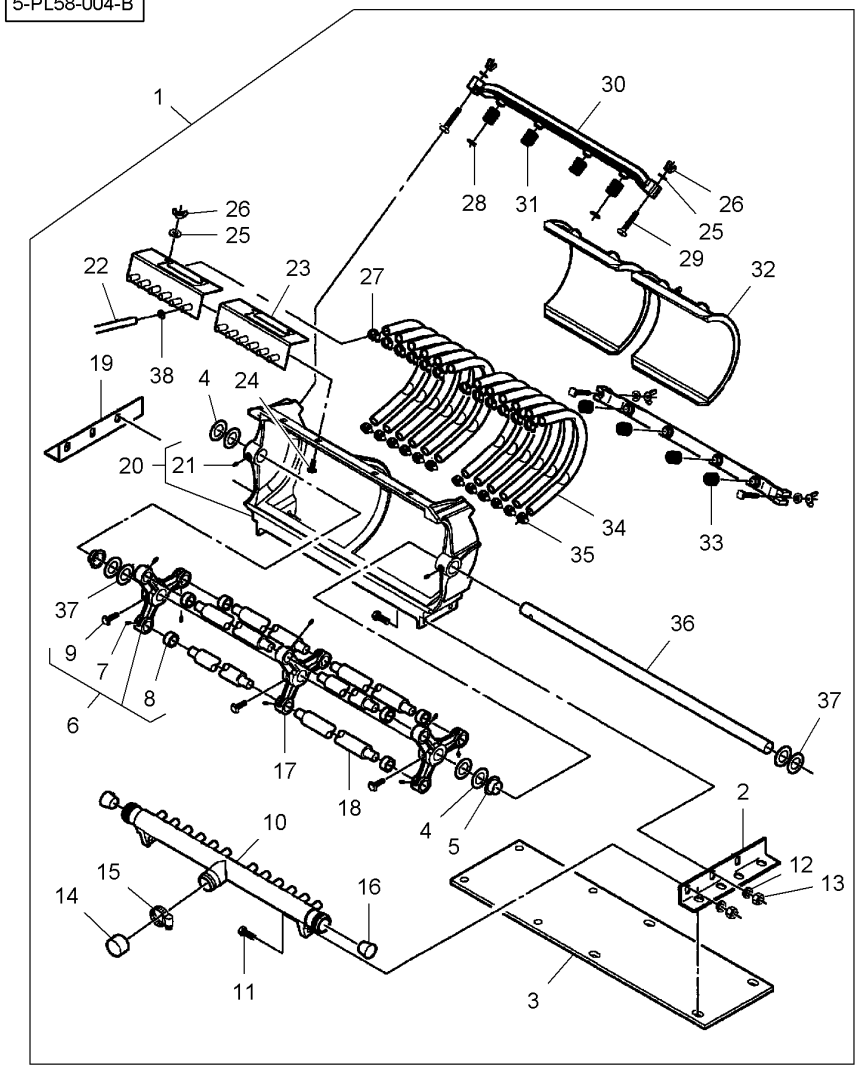


| | | | | | | |
|---|---|---|---|---|---|---|
| 27 | W246609B | 1 | | **12** | BUSH | BAGUE<br>BOCCOLA<br>RING<br>CASQUILLO |
| 28 | W248083B | 1 | | **2** | SPACER | ENTRETOISE<br>DISTANZIALE<br>ABSTANDSTUECK<br>DISCO ESPACIADOR |
| 29 | 14783 | 1 | 5/16"-18 X1-3/4 | **4** | BOLT | BOULON<br>BULLONE<br>BOLZEN<br>BULON |
| 30 | W248079B | 1 | | **2** | BAR | BARRE<br>BARRA<br>STAB<br>BARRA |
| 31 | W248082B | 1 | | **4** | SPRING | RESSORT<br>MOLLA<br>FEDER<br>MUELLE |
| 32 | W248075B | 1 | | **2** | PLATE | PLAQUE<br>PIASTRA<br>PLATTE<br>PLATO |
| 33 | W246595B | 1 | | **4** | SPRING | RESSORT<br>MOLLA<br>FEDER<br>MUELLE |
| 34 | **W246534B** | 1 | ◀▶ 13" | **12** | HOSE | DURITE<br>TUBO FLESSIBILE<br>SCHLAUCH<br>TUBO DE GOMA |
| 35 | W247090B | 1 | | **12** | CLAMP | COLLIER<br>FASCETTA<br>HALTESCHELLE<br>ABRAZADERA |
| 36 | W247920B | 1 | | **1** | SHAFT | ARBRE<br>ALBERO<br>WELLE<br>ARBOL |
| 37 | W247091B | 1 | | **4** | SHIM | CALE REGLAGE<br>SPESSORE<br>AUSGLEICHSCHEIBE<br>CALCE |
| 38 | 70921910 | 1 | | **12** | HOSE CLIP | COLLIER DURITE<br>COLLARE DI TUBO<br>SCHLAUCHBINDER<br>ABRAZADERA TUBO |

| | | |
|---|---|---|
| **Liquid Fertilizer Distributor** | **Pump** | **100-20** |
| **Distributeur D'Engrais Liquides** | **Pompe** | |
| **Gerät Zum Ausbringen Von Flüssigdünger** | **Pumpe** | |
| **Spanditrice Di Concimi Liquidi** | **Pompa** | |
| **Distribuidora De Abonos Liquidos** | **Bomba** | |

5-PL58-001-B

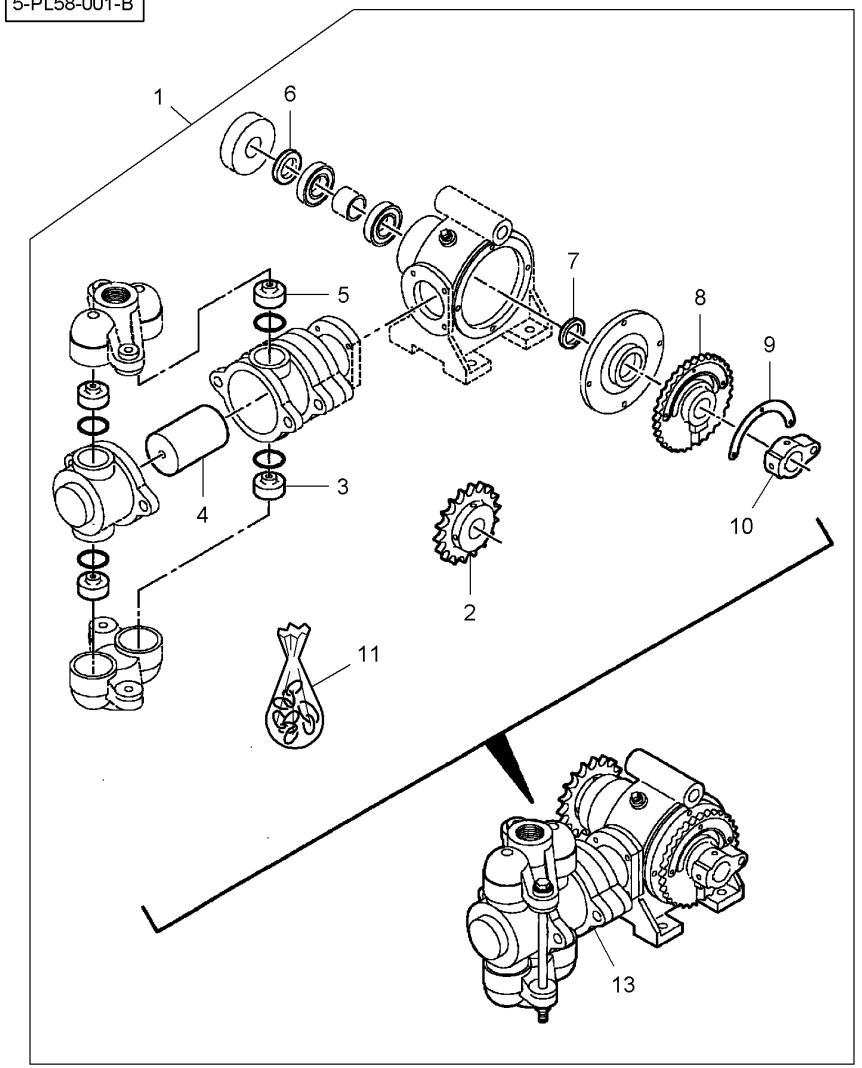


| | | | | | | |
|---|---|---|---|---|---|---|
| 1 | 6100192 | | **1** | KIT, ATTACHMENT | JEU ACCESSOIRES<br>KIT ACCESSORI | SATZ ANBAUTEILE<br>JUEGO ACCESORIO |
| 2 | 855512 | 1 18 | **1** | SPROCKET | BARBOTIN<br>RUOTA MOTRICE | KETTENRAD<br>RUEDA DE CADENA |
| 3 | 855507 | 1 | **2** | SUCTION VALVE | VALVE ASPIRATION<br>VALVOLA ASPIRAZ. | SAUGVENTIL<br>VALVULA SUCCION |
| 4 | 855506 | 1 | **1** | PLUNGER | PLONGEUR<br>STANTUFFO TUFFAN | TAUCHKOLBEN<br>EMBOLO BUZO |
| 5 | 855509 | 1 | **2** | DISCHARGE VALVE | VALVE DECHARGE<br>VALVOLA-SICUREZZ | DRUCKBEGR.VENTIL<br>VALVULA ALIVIO |
| 6 | 855501 | 1 | **1** | OIL SEAL | BAGUE ETANCHEITE<br>BOCCOLA PARAOLIO | OELDICHTRING<br>BUJE RETENACEITE |
| 7 | 855505 | 1 | **1** | OIL SEAL | BAGUE ETANCHEITE<br>BOCCOLA PARAOLIO | OELDICHTRING<br>BUJE RETENACEITE |
| 8 | 855504 | 1 | **1** | FLANGE | FLASQUE<br>FLANGIA | FLANSCH<br>PLETINA |
| 9 | N855502 | 1 | **1** | BALANCER | EQUILIBREUR<br>EQUILIBRATORE | AUSGL.SCHWINGE<br>BALANCEADOR |
| 10 | 855503 | 1 | **1** | ARM | BRAS<br>BRACCIO | SCHARHEBEL<br>BRAZO |
| 11 | N855510 | 1 | **1** | KIT, SEAL | JEU ETANCHEITE<br>KIT TENUTA | DICHTRINGSATZ<br>RETENES JUEGO |
| 12 | 855513 | 1 [A] | **1** | WRENCH | CLE A FOURCHE<br>CHIAVE SPACCATA | MUTTERSCHLUESSEL<br>LLAVE |
| 13 | 854917 | 1 | **1** | PUMP | POMPE<br>POMPA | PUMPE<br>BOMBA |

[A] NOT ILLUSTRATED
NON ILLUSTRE
NICHT ILLUSTRIERT
NON ILLUSTRATO
NO ILUSTRADO

| | | |
|---|---|---|
| **Liquid Fertilizer Distributor** | **Tank** | **100-25** |
| **Distributeur D'Engrais Liquides** | **Réservoir** | |
| **Gerät Zum Ausbringen Von Flüssigdünger** | **Tank** | |
| **Spanditrice Di Concimi Liquidi** | **Serbatoio** | |
| **Distribuidora De Abonos Liquidos** | **Tanque** | |

5-PL59-001-B

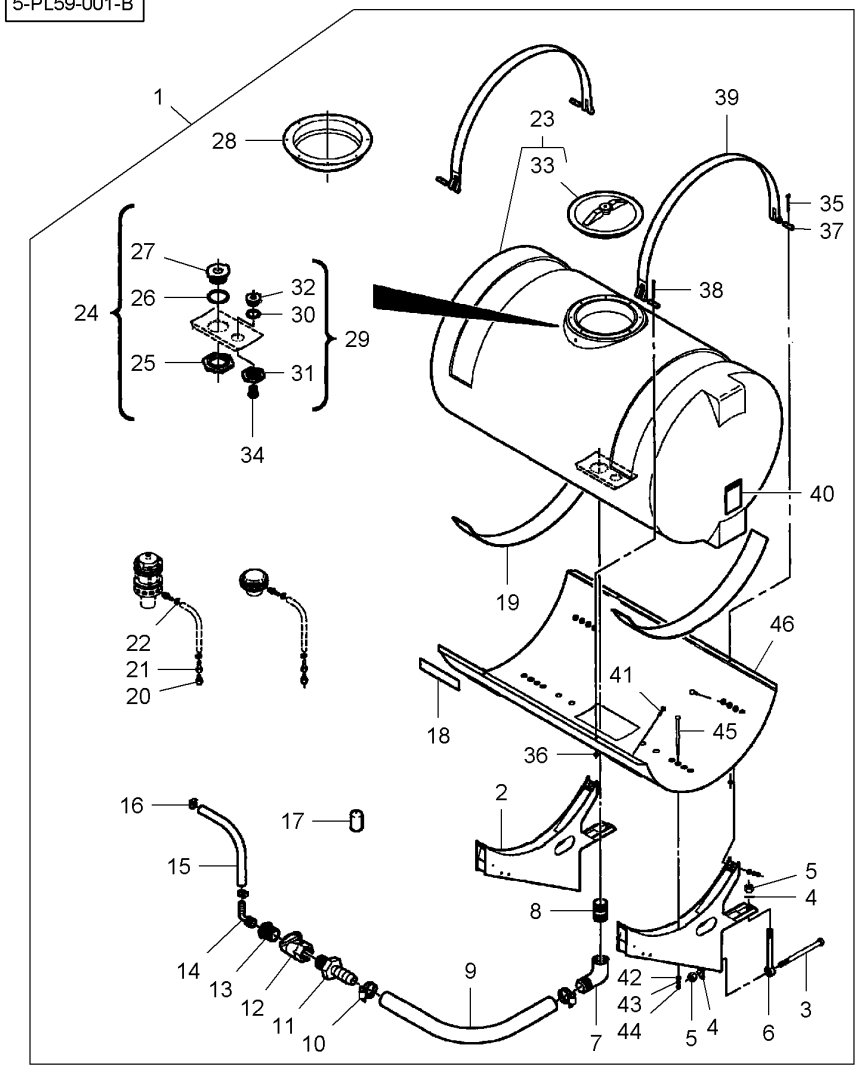


| | | | | | | |
|---|---|---|---|---|---|---|
| 1 | 6000450 | | **1** | KIT, ATTACHMENT | JEU ACCESSOIRES<br>KIT ACCESSORI | SATZ ANBAUTEILE<br>JUEGO ACCESORIO |
| 2 | N857686 | 1 | **2** | SUPPORT | SUPPORT<br>SOPPORTO | TRAGER<br>SOPORTE |
| 3 | W908188-4 | 1 3/4"-10 X 9-1/2 | **2** | SCREW | VIS<br>VITE | SCHRAUBE<br>TORNILLO |
| 4 | 700718035 | 1 | **4** | WASHER | RONDELLE<br>RONDELLA | SCHEIBE<br>ARANDELA |
| 5 | Y704718 | 1 3/4"-10 | **4** | LOCKNUT | ECROU FREIN<br>AUTOBLOCCANTE | SICHERUNGSMUTTER<br>CONTRATUERCA |
| 6 | BD0830 | 1 3/4"-10 X 9 | **2** | EYE BOLT | BOULON A OEIL<br>BULLONE A OCCHIO | AUGENSCHRAUBE<br>ARMELLA |
| 7 | W248465B | 1 | **1** | ELBOW | COUDE<br>GOMITO | WINKELSTUECK<br>CODO |
| 8 | W248452B | 1 1"-1/4 X 2 | **1** | NIPPLE | GRAISSEUR COUDE<br>NIPPLO | NIPPEL<br>NIPLE |
| 9 | 6100330 | 1 ◀▶ 50" | **1** | HOSE | DURITE<br>TUBO FLESSIBILE | SCHLAUCH<br>TUBO DE GOMA |
| 10 | 720656 | 1 | **2** | CLAMP | COLLIER<br>FASCETTA | HALTESCHELLE<br>ABRAZADERA |
| 11 | 854913 | 1 | **1** | ADAPTOR | ADAPTATEUR<br>ADATTATORE | REDUZIERNIPPEL<br>ADAPTADOR |
| 12 | 854912 | 1 | **1** | PRESSURE VALVE | VALVE<br>VALVOLA PRESSION | DRUCKVENTIL<br>VALVULA PRESION |
| 13 | W248461B | 1 | **1** | BUSH | BAGUE<br>BOCCOLA | RING<br>CASQUILLO |
| 14 | 854911 | 1 | **1** | ELBOW | COUDE<br>GOMITO | WINKELSTUECK<br>CODO |
| 15 | W246324B | 1 ◀▶ 120" | **1** | HOSE | DURITE<br>TUBO FLESSIBILE | SCHLAUCH<br>TUBO DE GOMA |
| 16 | 364125X1 | 1 ∅ 20-44 | **2** | HOSE CLIP | COLLIER DURITE<br>COLLARE DI TUBO | SCHLAUCHBINDER<br>ABRAZADERA TUBO |
| 17 | W248493B | 1 | **2** | PLUG | BOUCHON<br>TAPPO | STOPFEN<br>TAPON |
| 18 | 700717403 | 1 | **2** | REFLECTOR | CATADIOPTRE<br>CATADIOTTRO | RUECKSTRAHLER<br>LUZ REFRACTANTE |
| 19 | W247110B | 1 | **2** | GASKET | JOINT<br>GIUNTO PIANO | FLACHDICHTUNG<br>JUNTA PLANA |
| 20 | 700725702 | 1 | **4** | CONNECTOR | BORNE.<br>MORSETTO. | DOPPELNIPPEL<br>CONECTOR |
| 21 | 700725703 | 1 | **4** | UNION | RACCORD<br>RACCORDO | VERSCHRAUBUNG<br>RACOR |
| 22 | 70921910 | 1 | **8** | HOSE CLIP | COLLIER DURITE<br>COLLARE DI TUBO | SCHLAUCHBINDER<br>ABRAZADERA TUBO |
| 23 | BA5093 | 1 | **1** | TANK | RESERVOIR<br>SERBATOIO | TANK<br>DEPOSITO |
| 24 | BD5783 | 23 | **1** | UNION | RACCORD<br>RACCORDO | VERSCHRAUBUNG<br>RACOR |
| 25 | W247118B | 24 1"-1/4 | **1** | NUT | ECROU<br>DADO | MUTTER<br>TUERCA |
| 26 | 855212 | 24 | **1** | O RING | JOINT TORIQUE<br>GIUNTO DI TENUTA | O-RING<br>JUNTA TOROIDAL |

| | | |
|---|---|---|
| **Liquid Fertilizer Distributor** | **Tank** | **100-25** |
| **Distributeur D'Engrais Liquides** | **Réservoir** | |
| **Gerät Zum Ausbringen Von Flüssigdünger** | **Tank** | |
| **Spanditrice Di Concimi Liquidi** | **Serbatoio** | |
| **Distribuidora De Abonos Liquidos** | **Tanque** | |

5-PL59-001-B

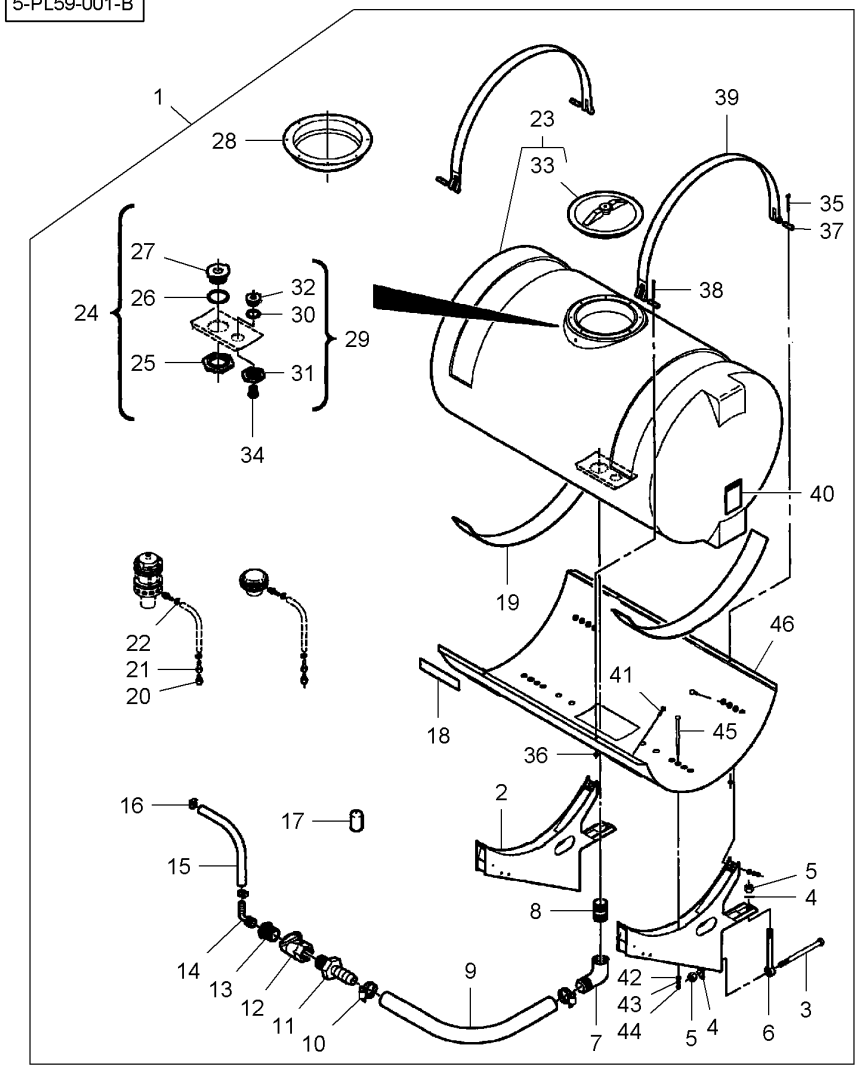


| | | | | | | |
|---|---|---|---|---|---|---|
| 27* | BD5783 | 24 | | **1** | UNION | RACCORD<br>RACCORDO | VERSCHRAUBUNG<br>RACOR |
| 28 | BD5780 | 23 | | **1** | FILLER | REMPLISSEUR<br>BOCCHETTONE | EINFUELLSTUTZEN<br>RELLENADOR |
| 29 | BD5782 | 23 | | **1** | UNION | RACCORD<br>RACCORDO | VERSCHRAUBUNG<br>RACOR |
| 30 | 855211 | 29 | | **1** | O RING | JOINT TORIQUE<br>GIUNTO DI TENUTA | O-RING<br>JUNTA TOROIDAL |
| 31 | W247114B | 29 | | **1** | NUT | ECROU<br>DADO | MUTTER<br>TUERCA |
| 32* | BD5782 | 29 | | **1** | UNION | RACCORD<br>RACCORDO | VERSCHRAUBUNG<br>RACOR |
| 33 | BD5781 | 23 | | **1** | COVER | COUVERCLE<br>COPERCHIO | ABDECKUNG.<br>CUBIERTA |
| 34 | 855261 | 23 | | **1** | PLUG | BOUCHON<br>TAPPO | STOPFEN<br>TAPON |
| 35 | 70925689 | 1 | 5/16"-18 X 3 | **2** | BOLT UNC | BOULON UNC<br>BULLONE UNC | MASCH.SCHRB.UNC<br>PERNO UNC |
| 36 | **70917372** | 1 | 5/16"-18 | **4** | NUT | ECROU<br>DADO | MUTTER<br>TUERCA |
| 37 | W246437B | 1 | | **4** | PIN | GOUPILLE<br>COPPIGLIA | STIFT<br>PASADOR |
| 38 | K4053 | 1 | 5/16"-18 X3-1/2 | **2** | BOLT | BOULON<br>BULLONE | BOLZEN<br>BULON |
| 39 | 854230 | 1 | | **2** | BAND | BANDE<br>NASTRO | BAND<br>BANDA |
| 40 | N851758 | 1 | | **1** | DECAL | DECALCOMANIE<br>DECALCOMANIA | AUFKLEBER<br>CALCOMANIA |
| 41 | 70923220 | 1 | 3/8"-16 X 1-1/4 | **4** | BOLT UNC | BOULON UNC<br>BULLONE UNC | MASCH.SCHRB.UNC<br>PERNO UNC |
| 42 | 700717523 | 1 | | **6** | WASHER | RONDELLE<br>RONDELLA | SCHEIBE<br>ARANDELA |
| 43 | 353434X1 | 1 | 3/8" | **6** | LOCK WASHER | RONDELLE FREIN<br>RONDELLA ARRESTO | SICHERUNGSRING<br>ARANDELA SEGURID |
| 44 | 355566X1 | 1 | 3/8"-16 | **6** | NUT UNC | ECROU UNC<br>DADO UNC | MUTTER UNC<br>TUERCA UNC |
| 45 | 70931808 | 1 | 3/8"-16 X 7-1/2 | **2** | BOLT | BOULON<br>BULLONE | BOLZEN<br>BULON |
| 46 | N858099 | 1 | | **1** | BASE | SEMELLE<br>BASE | FUSSPLATTE<br>BASE |

**Granular Fertilizer Distributor**
**Distributeur D'Engrais Granulé**
**Gekörnter Düngerverteilung**
**Spanditrice Di Concimi Granulare**
**Distribuidora De Abonos Granulado**

**100-30**

**3 Rows - Left Side**
**3 Rangs - Cote Gauche**
**3 Reihen - Linke Seite**
**3 Lineas - Lato Sinistro**
**3 Lineas - Lado Izquierdo**

5-PM19-001-A

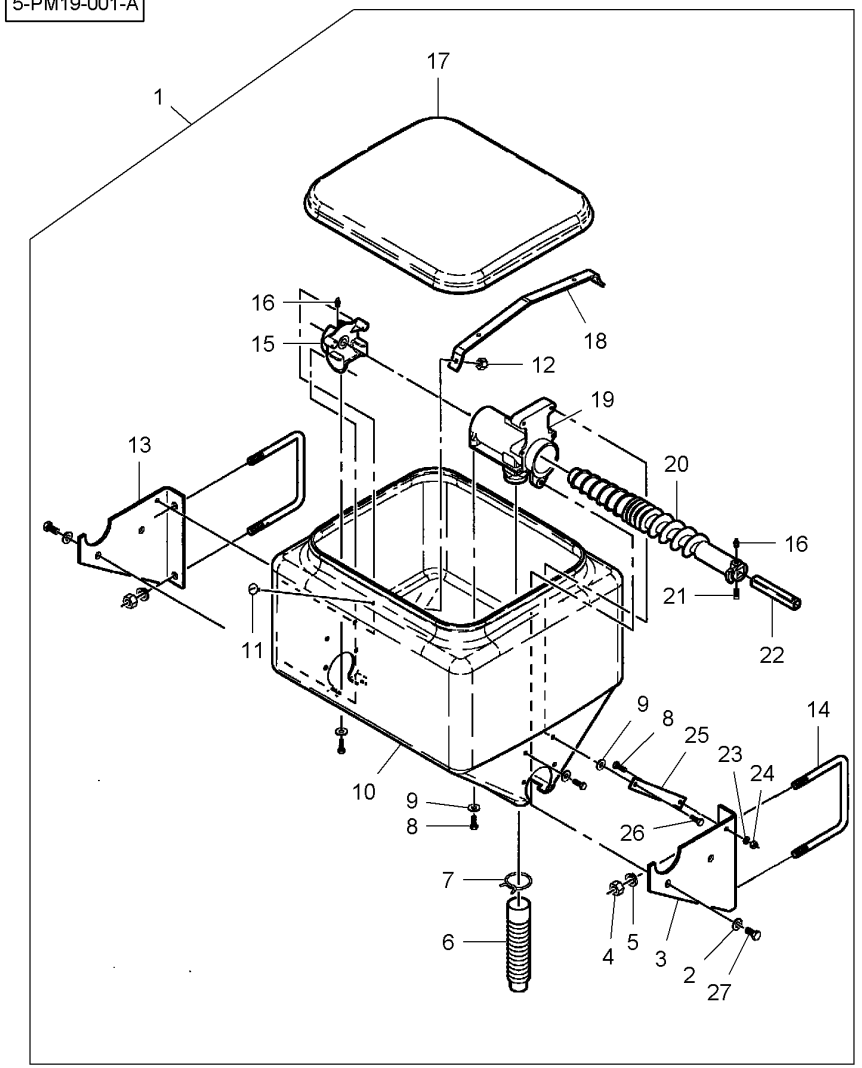


| | | | | | |
|---|---|---|---|---|---|
| 1* | 6000400 | 100-35 No 1<br>100-40 No 1<br>100-45 No 1<br>100-50 No 1<br>100-55 No 1 | **1** | KIT, ATTACHMENT | JEU ACCESSOIRES<br>KIT ACCESSORI | SATZ ANBAUTEILE<br>JUEGO ACCESORIO |
| 2* | Y705624 | 1 1/2" | **2** | WASHER | RONDELLE<br>RONDELLA | SCHEIBE<br>ARANDELA |
| 3* | W247864B | 1 ◀ | **1** | BRACKET | SUPPORT FIXATION<br>STAFFETTA | HALTEARM<br>SOPORTE |
| 4* | 70932665 | 1 5/8"-11 | **4** | NUT UNC | ECROU UNC<br>DADO UNC | MUTTER UNC<br>TUERCA UNC |
| 5* | 70917373 | 1 5/8" | **4** | LOCK WASHER | RONDELLE FREIN<br>RONDELLA ARRESTO | SICHERUNGSRING<br>ARANDELA SEGURID |
| 6* | **W245365B** | 1 ◀▶ 18" | **1** | TUBE | TUBE<br>TUBO. | ROHR<br>TUBO. |
| 7* | W950175 | 1 | **1** | CLAMP | COLLIER<br>FASCETTA | HALTESCHELLE<br>ABRAZADERA |
| 8* | 70921966 | 1 3/8"-16 X 7/8 | **10** | SCREW UNC | VIS UNC<br>VITE UNC | SCHRAUBE UNC<br>TORNILLO UNC |
| 9* | **K2880** | 1 | **10** | WASHER | RONDELLE<br>RONDELLA | SCHEIBE<br>ARANDELA |
| 10* | W248357B | 1 | **1** | HOPPER | TREMIE<br>TRAMOGGIA | KORNTANK<br>TOLVA |
| 11* | 70936460 | 1 5/16"-18 X 3/4 | **2** | SCREW | VIS<br>VITE | SCHRAUBE<br>TORNILLO |
| 12* | Y704015 | 1 5/16"-18 | **2** | NUT UNC | ECROU UNC<br>DADO UNC | MUTTER UNC<br>TUERCA UNC |
| 13* | W247865B | 1 ▶ | **1** | BRACKET | SUPPORT FIXATION<br>STAFFETTA | HALTEARM<br>SOPORTE |
| 14* | **W232588B** | 1 | **2** | U BOLT | ETRIER FILETE<br>BULLONE A STAFFA | BUEGELSCHRAUBE<br>BRIDA EN U |
| 15* | W245902B | 1 | **1** | BEARING | COUSSINET<br>CUSCINETTO | LAGER<br>COJINETE |
| 16* | 70914465 | 1 | **2** | GREASE FITTING | GRAISSEUR<br>INGRASSATORE | DRUCKSCHMIERKOPF<br>ENGRASADOR |
| 17* | W248358B | 1 | **1** | LID | PLAQUE COUVERCLE<br>COPERTA | ABDECKPLATTE<br>COBERTURA |
| 18* | W247863B | 1 | **1** | STRAP | PATTE<br>CORREGGIA | LASCHE<br>FAJA |
| 19* | W247862B | 1 | **1** | BRACKET | SUPPORT FIXATION<br>STAFFETTA | HALTEARM<br>SOPORTE |
| 20* | W247089B | 1 ◀ | **1** | AUGER | VIS SANS FIN<br>COCLEA | FOERDERSCHNECKE<br>SINFIN |
| 21* | 70920468 | 1 3/8"-16 X 5/8 | **1** | SCREW UNC | VIS UNC<br>VITE UNC | SCHRAUBE UNC<br>TORNILLO UNC |
| 22* | W247867B | 1 | **1** | TUBE | TUBE<br>TUBO. | ROHR<br>TUBO. |
| 23* | 70916965 | 1 3/8" | **1** | LOCK WASHER | RONDELLE FREIN<br>RONDELLA ARRESTO | SICHERUNGSRING<br>ARANDELA SEGURID |
| 24* | **70916950** | 1 3/8"-16 | **1** | NUT UNC | ECROU UNC<br>DADO UNC | MUTTER UNC<br>TUERCA UNC |

| Granular Fertilizer Distributor<br>Distributeur D'Engrais Granulé<br>Gekörnter Düngerverteilung<br>Spanditrice Di Concimi Granulare<br>Distribuidora De Abonos Granulado | **100-30** | **3 Rows - Left Side**<br>**3 Rangs - Cote Gauche**<br>**3 Reihen - Linke Seite**<br>**3 Lineas - Lato Sinistro**<br>**3 Lineas - Lado Izquierdo** |
|---|---|---|

5-PM19-001-A

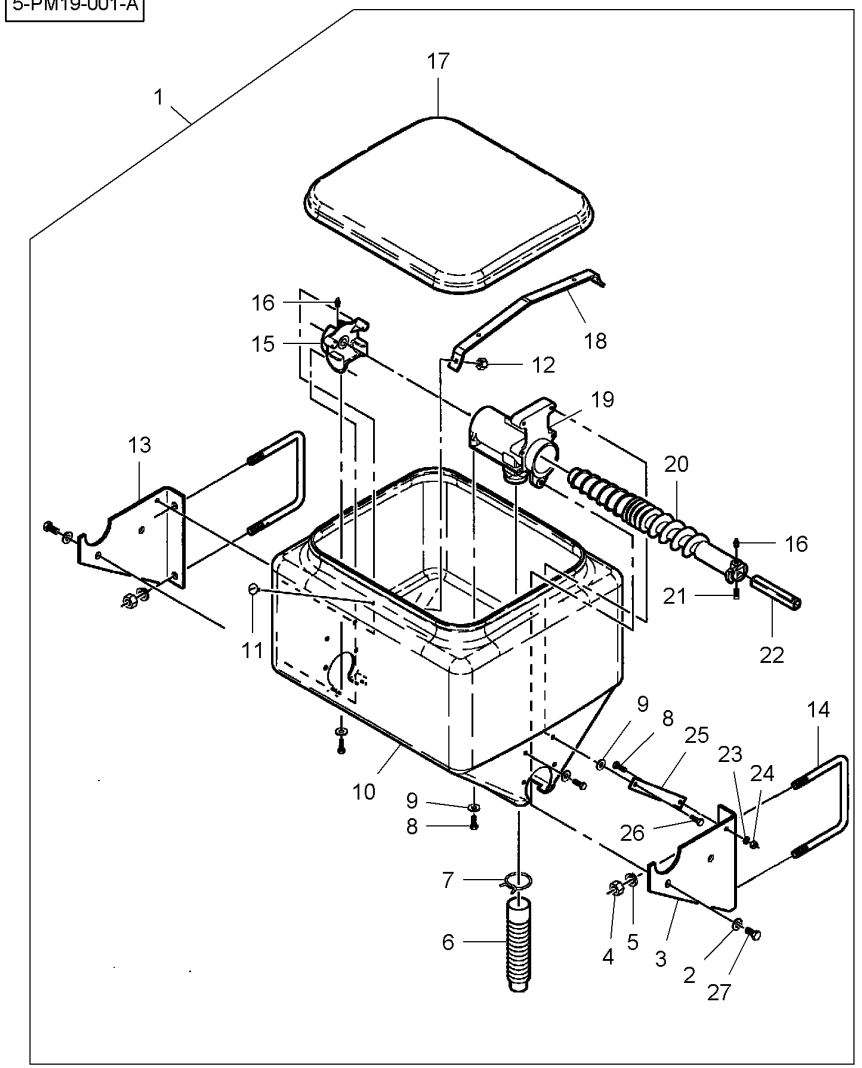


| | | | | | |
|---|---|---|---|---|---|
| 25* | 854389 | 1 | **1** | STRAP | PATTE<br>CORREGGIA<br>LASCHE<br>FAJA |
| 26* | 70921210 | 1 3/8"-16 X 1 | **1** | BOLT UNC | BOULON UNC<br>BULLONE UNC<br>MASCH.SCHRB.UNC<br>PERNO UNC |
| 27* | **70923114** | 1 1/2"-13 X 1 | **2** | BOLT UNC | BOULON UNC<br>BULLONE UNC<br>MASCH.SCHRB.UNC<br>PERNO UNC |

**Granular Fertilizer Distributor**
**Distributeur D'Engrais Granulé**
**Gekörnter Düngerverteilung**
**Spanditrice Di Concimi Granulare**
**Distribuidora De Abonos Granulado**

# 100-35

**3 Rows - Right Side & Center**
**3 Rangs - Cote Droit & Central**
**3 Reihen - Rechte Seite & Zentrum**
**3 Lineas - Lato Destro & Centrale**
**3 Lineas - Lado Derecho & Central**

5-PM19-002-A

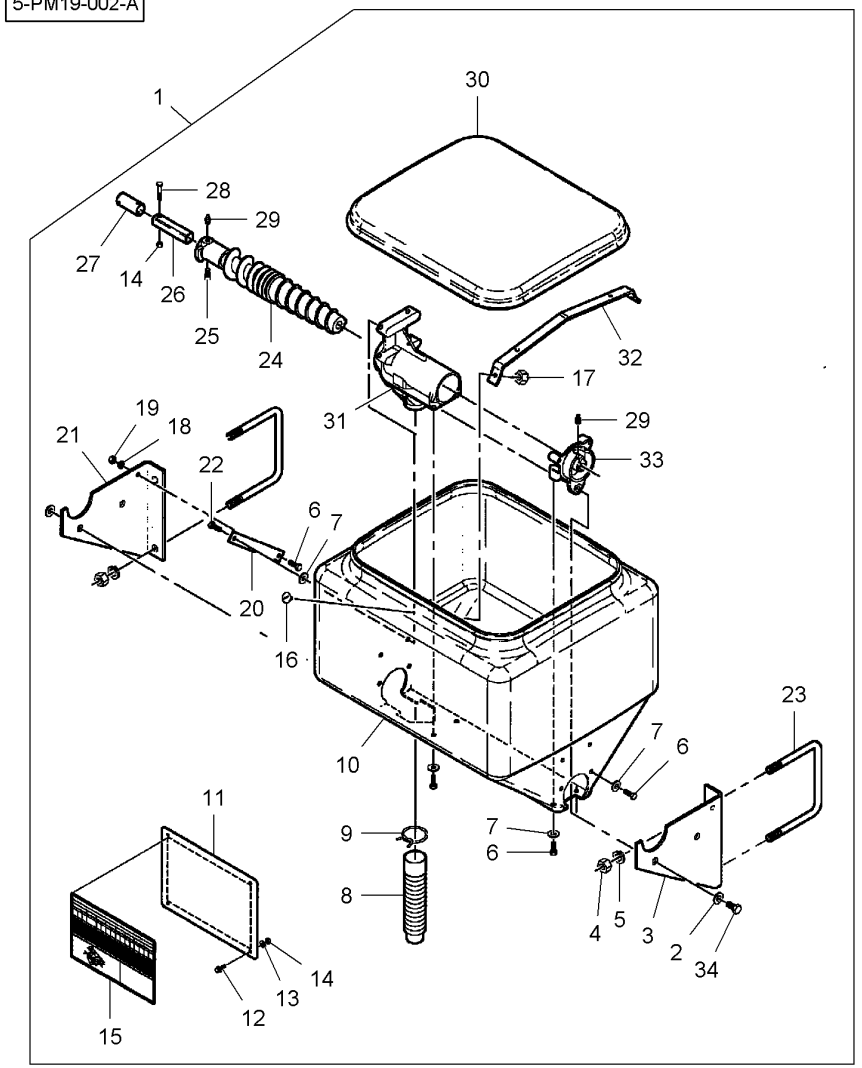


| | | | | | |
|---|---|---|---|---|---|
| 1* | 6000400 | 100-30 No 1<br>100-40 No 1<br>100-45 No 1<br>100-50 No 1<br>100-55 No 1 | **1** | KIT, ATTACHMENT | JEU ACCESSOIRES<br>KIT ACCESSORI | SATZ ANBAUTEILE<br>JUEGO ACCESORIO |
| 2* | Y705624 | 1 1/2" | **2** | WASHER | RONDELLE<br>RONDELLA | SCHEIBE<br>ARANDELA |
| 3* | W247864B | 1 ◀ | **1** | BRACKET | SUPPORT FIXATION<br>STAFFETTA | HALTEARM<br>SOPORTE |
| 4* | 70932665 | 1 5/8"-11 | **4** | NUT UNC | ECROU UNC<br>DADO UNC | MUTTER UNC<br>TUERCA UNC |
| 5* | 70917373 | 1 5/8" | **4** | LOCK WASHER | RONDELLE FREIN<br>RONDELLA ARRESTO | SICHERUNGSRING<br>ARANDELA SEGURID |
| 6* | 70921966 | 1 3/8"-16 X 7/8 | **10** | SCREW UNC | VIS UNC<br>VITE UNC | SCHRAUBE UNC<br>TORNILLO UNC |
| 7* | **K2880** | 1 | **10** | WASHER | RONDELLE<br>RONDELLA | SCHEIBE<br>ARANDELA |
| 8* | **W245365B** | 1 ◀▶ 18" | **1** | TUBE | TUBE<br>TUBO. | ROHR<br>TUBO. |
| 9* | W950175 | 1 | **1** | CLAMP | COLLIER<br>FASCETTA | HALTESCHELLE<br>ABRAZADERA |
| 10* | W248357B | 1 | **1** | HOPPER | TREMIE<br>TRAMOGGIA | KORNTANK<br>TOLVA |
| 11* | 853854 | 1 [A] | **1** | PLATE | PLAQUE<br>PIASTRA | PLATTE<br>PLATO |
| 12* | 11701 | 1 [A]<br>1/4"-20 X 5/8 | **4** | CAPSCREW | VIS BOUCHON<br>TAPPO A VITE | HUTSCHRAUBE<br>TORNILLO TAPON |
| 13* | 353769X1 | 1 [A]<br>1/4" | **4** | WASHER | RONDELLE<br>RONDELLA | SCHEIBE<br>ARANDELA |
| 14* | 70923358 | 1 [A]<br>1/4"-20 | **5** | LOCKNUT | ECROU FREIN<br>AUTOBLOCCANTE | SICHERUNGSMUTTER<br>CONTRATUERCA |
| 15* | N857596 | 1 [A] | **1** | DECAL | DECALCOMANIE<br>DECALCOMANIA | AUFKLEBER<br>CALCOMANIA |
| 16* | 70936460 | 1 5/16"-18 X 3/4 | **2** | SCREW | VIS<br>VITE | SCHRAUBE<br>TORNILLO |
| 17* | Y704015 | 1 5/16"-18 | **2** | NUT UNC | ECROU UNC<br>DADO UNC | MUTTER UNC<br>TUERCA UNC |
| 18* | 70916965 | 1 3/8" | **1** | LOCK WASHER | RONDELLE FREIN<br>RONDELLA ARRESTO | SICHERUNGSRING<br>ARANDELA SEGURID |
| 19* | **70916950** | 1 3/8"-16 | **1** | NUT UNC | ECROU UNC<br>DADO UNC | MUTTER UNC<br>TUERCA UNC |
| 20* | 854389 | 1 | **1** | STRAP | PATTE<br>CORREGGIA | LASCHE<br>FAJA |
| 21* | W247865B | 1 ▶ | **1** | BRACKET | SUPPORT FIXATION<br>STAFFETTA | HALTEARM<br>SOPORTE |
| 22* | 70921210 | 1 3/8"-16 X 1 | **1** | BOLT UNC | BOULON UNC<br>BULLONE UNC | MASCH.SCHRB.UNC<br>PERNO UNC |
| 23* | **W232588B** | 1 | **2** | U BOLT | ETRIER FILETE<br>BULLONE A STAFFA | BUEGELSCHRAUBE<br>BRIDA EN U |
| 24* | W247088B | 1 ▶ | **1** | AUGER | VIS SANS FIN<br>COCLEA | FOERDERSCHNECKE<br>SINFIN |

**Granular Fertilizer Distributor**
**Distributeur D'Engrais Granulé**
**Gekörnter Düngerverteilung**
**Spanditrice Di Concimi Granulare**
**Distribuidora De Abonos Granulado**

**100-35**

**3 Rows - Right Side & Center**
**3 Rangs - Cote Droit & Central**
**3 Reihen - Rechte Seite & Zentrum**
**3 Lineas - Lato Destro & Centrale**
**3 Lineas - Lado Derecho & Central**

5-PM19-002-A

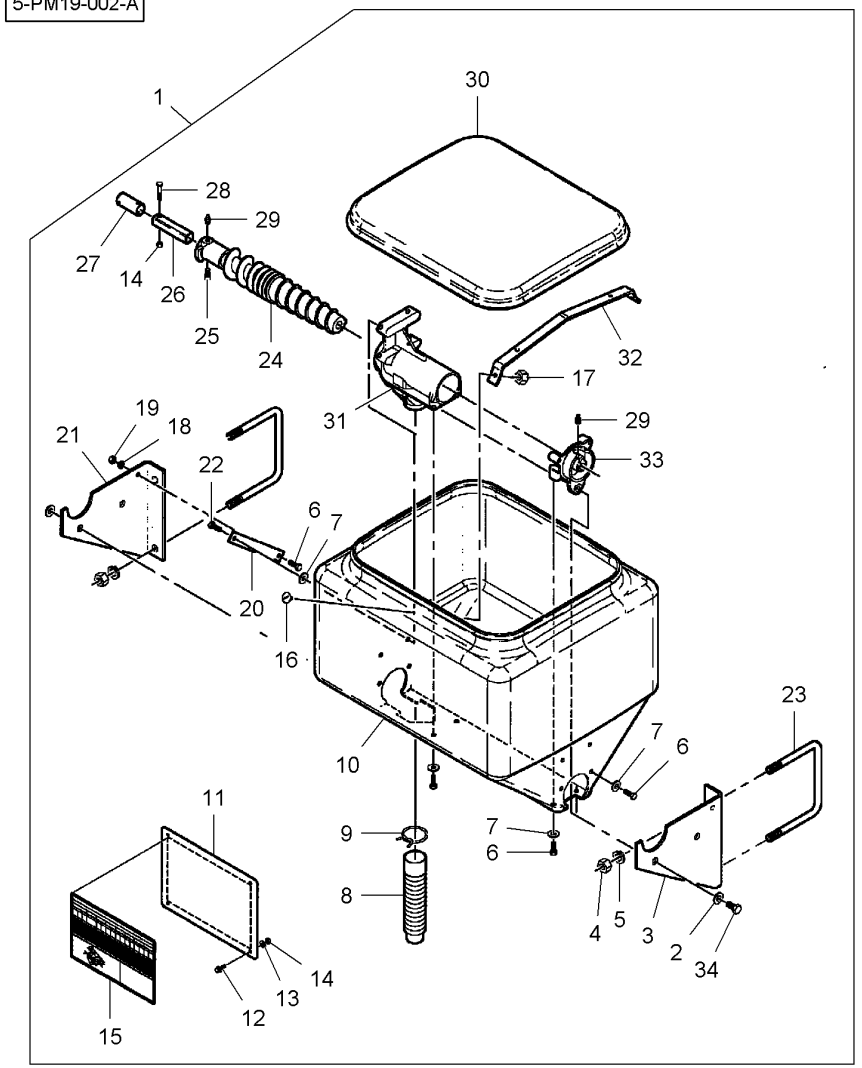


| | | | | | | |
|---|---|---|---|---|---|---|
| 25* | 70920468 | 1 | 3/8"-16 X 5/8 | **1** | SCREW UNC | VIS UNC<br>VITE UNC | SCHRAUBE UNC<br>TORNILLO UNC |
| 26* | W247867B | 1 | | **1** | TUBE | TUBE<br>TUBO. | ROHR<br>TUBO. |
| 27* | W246810B | 1 | | **1** | COUPLER | COUPLEUR<br>ACCOPPIATORE | KUPPLER<br>ACOPLADOR |
| 28* | 70922837 | 1 | 1/4"-20 X 1-1/2 | **1** | SCREW | VIS<br>VITE | SCHRAUBE<br>TORNILLO |
| 29* | 70914465 | 1 | | **2** | GREASE FITTING | GRAISSEUR<br>INGRASSATORE | DRUCKSCHMIERKOPF<br>ENGRASADOR |
| 30* | W248358B | 1 | | **1** | LID | PLAQUE COUVERCLE<br>COPERTA | ABDECKPLATTE<br>COBERTURA |
| 31* | W247862B | 1 | | **1** | BRACKET | SUPPORT FIXATION<br>STAFFETTA | HALTEARM<br>SOPORTE |
| 32* | W247863B | 1 | | **1** | STRAP | PATTE<br>CORREGGIA | LASCHE<br>FAJA |
| 33* | W245902B | 1 | | **1** | BEARING | COUSSINET<br>CUSCINETTO | LAGER<br>COJINETE |
| 34* | **70923114** | 1 | 1/2"-13 X 1 | **2** | BOLT UNC | BOULON UNC<br>BULLONE UNC | MASCH.SCHRB.UNC<br>PERNO UNC |

[A] CENTER HOPPER ONLY
SEULEMENT TRÉMIE CENTRAL
NUR ZENTRUM-FÜLLTRICHTER
SOLAMENTE TRAMOGGIA CENTRALE
SOLAMENTE TOLVA CENTRAL

| Granular Fertilizer Distributor<br>Distributeur D'Engrais Granulé<br>Gekörnter Düngerverteilung<br>Spanditrice Di Concimi Granulare<br>Distribuidora De Abonos Granulado | **100-40** | **3 Row**<br>**3 Rangs**<br>**3 Reihes**<br>**3 Lineas**<br>**3 Lineas** |
|---|---|---|

5-PM19-003-A

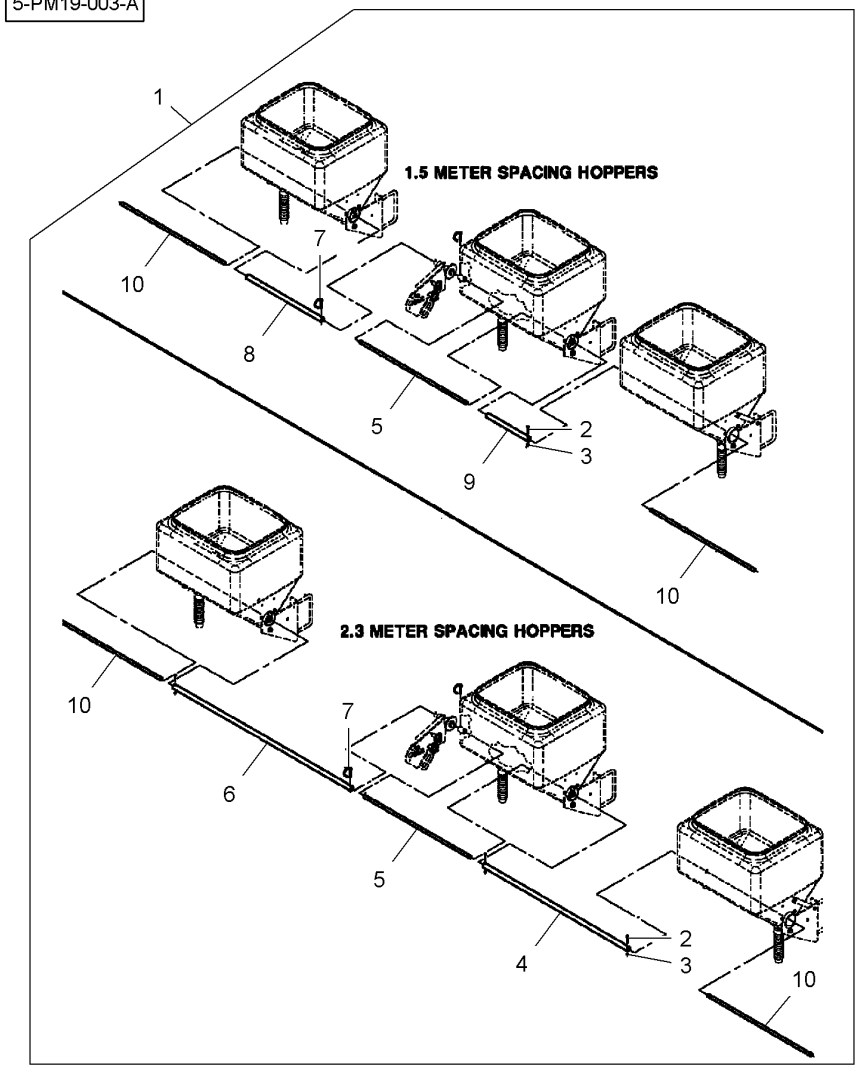


| | | | | | |
|---|---|---|---|---|---|
| 1* | 6000400 | 100-30 No 1<br>100-35 No 1<br>100-45 No 1<br>100-50 No 1<br>100-55 No 1 | **1** KIT, ATTACHMENT | JEU ACCESSOIRES<br>KIT ACCESSORI | SATZ ANBAUTEILE<br>JUEGO ACCESORIO |
| 2* | 70922837 | 1 1/4"-20 X 1-1/2 | **6** SCREW | VIS<br>VITE | SCHRAUBE<br>TORNILLO |
| 3* | 70923358 | 1 1/4"-20 | **6** LOCKNUT | ECROU FREIN<br>AUTOBLOCCANTE | SICHERUNGSMUTTER<br>CONTRATUERCA |
| 4* | N857520 | 1 ◀▶ 44"-1/4 | **1** SHAFT | ARBRE<br>ALBERO | WELLE<br>ARBOL |
| 5* | N857517 | 1 ◀▶ 32"-1/2 | **2** SHAFT | ARBRE<br>ALBERO | WELLE<br>ARBOL |
| 6* | N857521 | 1 ◀▶ 54"-1/4 | **1** SHAFT | ARBRE<br>ALBERO | WELLE<br>ARBOL |
| 7* | W246024B | 1 | **4** PIN | GOUPILLE<br>COPPIGLIA | STIFT<br>PASADOR |
| 8* | W247869B | 1 ◀▶ 22"-3/4 | **1** SHAFT | ARBRE<br>ALBERO | WELLE<br>ARBOL |
| 9* | N857519 | 1 ◀▶ 12"-3/4 | **1** SHAFT | ARBRE<br>ALBERO | WELLE<br>ARBOL |
| 10* | W246755B | 1 ◀▶ 31"-3/4 | **4** SHAFT | ARBRE<br>ALBERO | WELLE<br>ARBOL |

**Granular Fertilizer Distributor**
**Distributeur D'Engrais Granulé**
**Gekörnter Düngerverteilung**
**Spanditrice Di Concimi Granulare**
**Distribuidora De Abonos Granulado**

# 100-45

**3 Row**
**3 Rangs**
**3 Reihes**
**3 Lineas**
**3 Lineas**

5-PM19-004-A

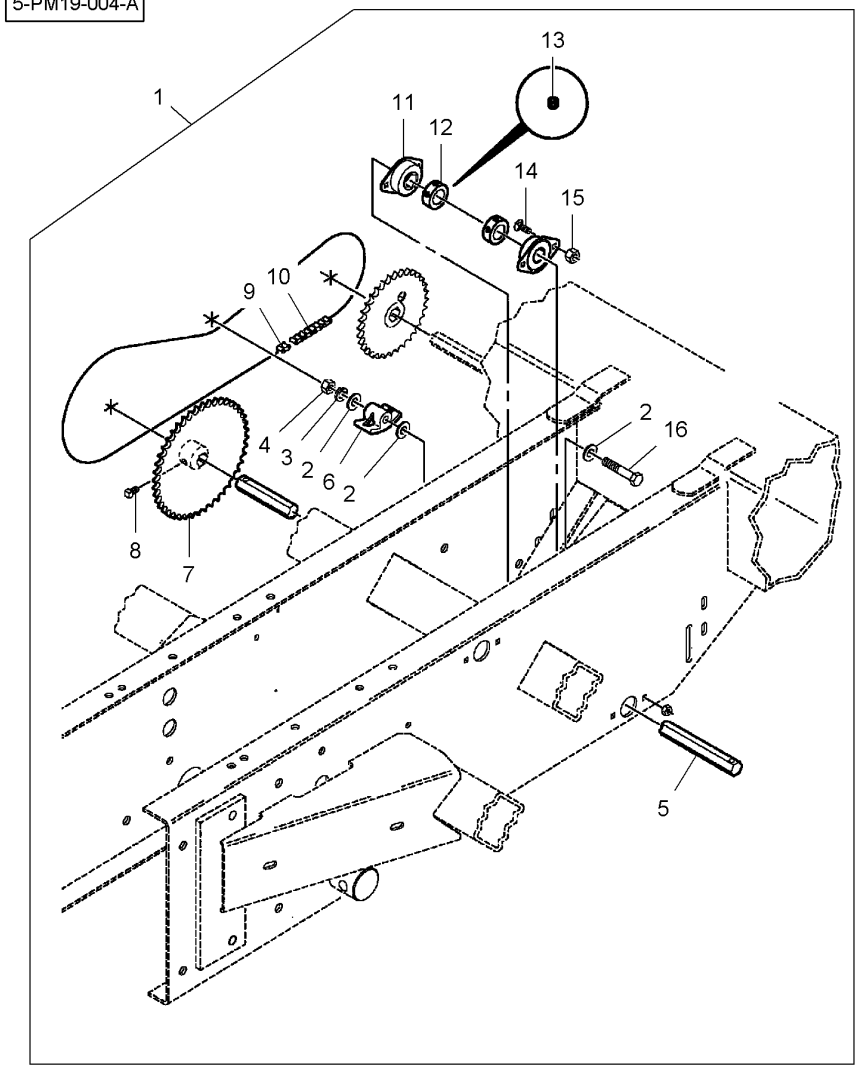


| | | | | | |
|---|---|---|---|---|---|
| 1* | 6000400 | 100-30 No 1<br>100-35 No 1<br>100-40 No 1<br>100-50 No 1<br>100-55 No 1 | **1** | KIT, ATTACHMENT | JEU ACCESSOIRES<br>KIT ACCESSORI | SATZ ANBAUTEILE<br>JUEGO ACCESORIO |
| 2* | 700717523 | 1 | **3** | WASHER | RONDELLE<br>RONDELLA | SCHEIBE<br>ARANDELA |
| 3* | 70916965 | 1 3/8" | **1** | LOCK WASHER | RONDELLE FREIN<br>RONDELLA ARRESTO | SICHERUNGSRING<br>ARANDELA SEGURID |
| 4* | **70916950** | 1 3/8"-16 | **1** | NUT UNC | ECROU UNC<br>DADO UNC | MUTTER UNC<br>TUERCA UNC |
| 5* | 854436 | 1 ◀▶ 30"-1/2 | **1** | SHAFT | ARBRE<br>ALBERO | WELLE<br>ARBOL |
| 6* | **W247445B** | 1 | **1** | SKATE | PATIN<br>PATTINO | SCHLITTEN-KUFE<br>PATIN |
| 7* | W247856B | 1 44 | **1** | SPROCKET | BARBOTIN<br>RUOTA MOTRICE | KETTENRAD<br>RUEDA DE CADENA |
| 8* | 70923085 | 1 5/16"-18 X 1/2 | **1** | SETSCREW | VIS DE BLOCAGE<br>INSIEME VITI | STELLSCHRAUBE<br>SET SCREW |
| 9* | 70915515 | 1 No 40 R/C | **1** | LINK | MAILLON<br>MAGLIA | GLIED<br>ESLABON |
| 10* | 854129 | 1 No 40<br>89 Pitches | **1** | CHAIN | CHAINE<br>CATENA | KETTE<br>CADENA |
| 11* | **W247647B** | 1 | **2** | BEARING ASSY | ROULEMENT<br>CUSCINETTO COMPL | RADIALLAGER<br>RODAMIENTO RAD |
| 12* | **W247234B** | 1 | **2** | COLLAR | COLLERETTE<br>COLLARE | KRAGEN<br>COLLARIN |
| 13* | 70911712 | 12 5/16"-18 X 5/16 | **1** | SETSCREW | VIS DE BLOCAGE<br>INSIEME VITI | STELLSCHRAUBE<br>SET SCREW |
| 14* | 364942X1 | 1 1/4"-20 X 5/8 | **4** | BOLT UNC | BOULON UNC<br>BULLONE UNC | MASCH.SCHRB.UNC<br>PERNO UNC |
| 15* | 70923358 | 1 1/4"-20 | **4** | LOCKNUT | ECROU FREIN<br>AUTOBLOCCANTE | SICHERUNGSMUTTER<br>CONTRATUERCA |
| 16* | **70921972** | 1 3/8"-16 X 2-1/2 | **1** | BOLT UNC | BOULON UNC<br>BULLONE UNC | MASCH.SCHRB.UNC<br>PERNO UNC |

| Granular Fertilizer Distributor<br>Distributeur D'Engrais Granulé<br>Gekörnter Düngerverteilung<br>Spanditrice Di Concimi Granulare<br>Distribuidora De Abonos Granulado | 100-50 | 3 Row<br>3 Rangs<br>3 Reihes<br>3 Lineas<br>3 Lineas |
|---|---|---|

5-PM19-005-A

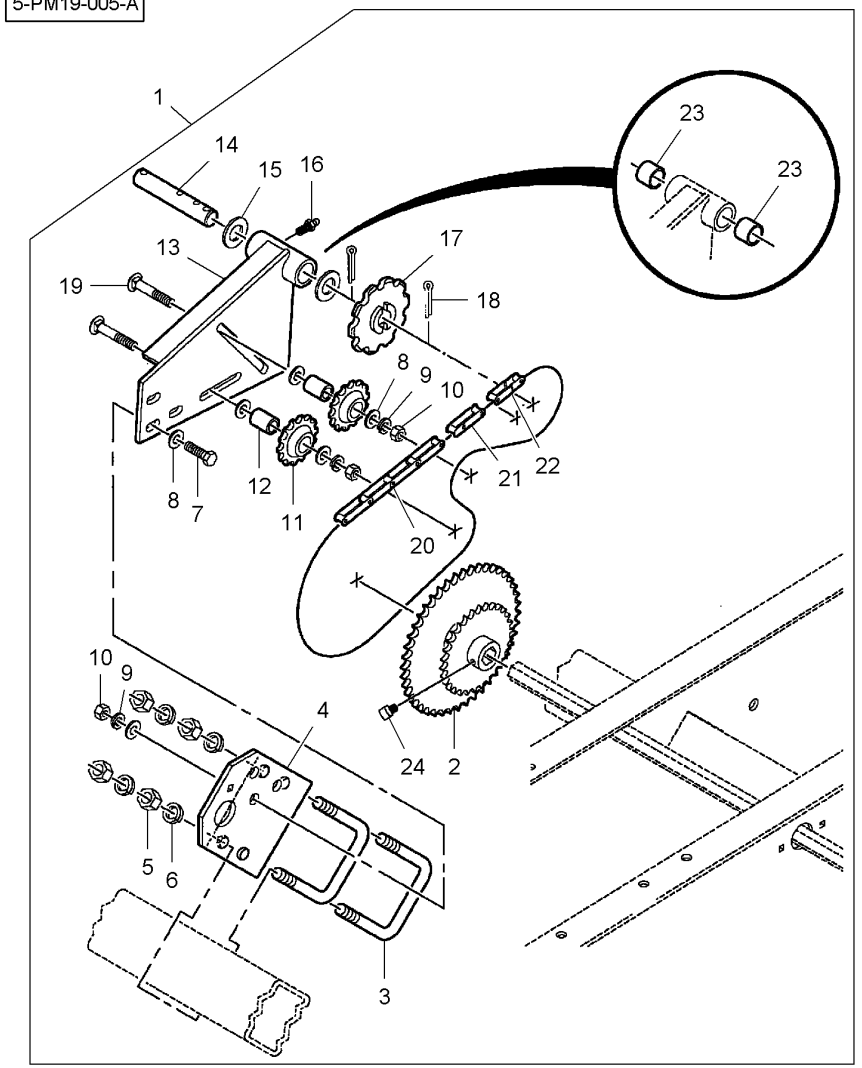


| | | | | | |
|---|---|---|---|---|---|
| 1* | 6000400 | 100-30 No 1<br>100-35 No 1<br>100-40 No 1<br>100-45 No 1<br>100-55 No 1 | 1 KIT, ATTACHMENT | JEU ACCESSOIRES<br>KIT ACCESSORI | SATZ ANBAUTEILE<br>JUEGO ACCESORIO |
| 2* | W247761B | 1 | 1 SPROCKET | BARBOTIN<br>RUOTA MOTRICE | KETTENRAD<br>RUEDA DE CADENA |
| 3* | 852211 | 1 | 2 U BOLT | ETRIER FILETE<br>BULLONE A STAFFA | BUEGELSCHRAUBE<br>BRIDA EN U |
| 4* | 852200 | 1 | 1 BRACKET | SUPPORT FIXATION<br>STAFFETTA | HALTEARM<br>SOPORTE |
| 5* | 704031 | 1 1/2"-13 | 4 NUT UNC | ECROU UNC<br>DADO UNC | MUTTER UNC<br>TUERCA UNC |
| 6* | Y705046 | 1 1/2" | 4 LOCK WASHER | RONDELLE FREIN<br>RONDELLA ARRESTO | SICHERUNGSRING<br>ARANDELA SEGURID |
| 7* | 70920415 | 1 3/8"-16 X 1-1/4 | 3 BOLT UNC | BOULON UNC<br>BULLONE UNC | MASCH.SCHRB.UNC<br>PERNO UNC |
| 8* | 700717541 | 1 | 10 WASHER | RONDELLE<br>RONDELLA | SCHEIBE<br>ARANDELA |
| 9* | 70916965 | 1 3/8" | 5 LOCK WASHER | RONDELLE FREIN<br>RONDELLA ARRESTO | SICHERUNGSRING<br>ARANDELA SEGURID |
| 10* | **70916950** | 1 3/8"-16 | 5 NUT UNC | ECROU UNC<br>DADO UNC | MUTTER UNC<br>TUERCA UNC |
| 11* | **W247938B** | 1 14 | 2 SPROCKET | BARBOTIN<br>RUOTA MOTRICE | KETTENRAD<br>RUEDA DE CADENA |
| 12* | WSP1344 | 1 | 2 SPACER | ENTRETOISE<br>DISTANZIALE | ABSTANDSTUECK<br>DISCO ESPACIADOR |
| 13* | 852201 | 1 | 1 SUPPORT | SUPPORT<br>SOPPORTO | TRAGER<br>SOPORTE |
| 13* | W245386B | 13 | 1 BEARING | COUSSINET<br>CUSCINETTO | LAGER<br>COJINETE |
| 14* | W245918B | 1 | 1 SHAFT | ARBRE<br>ALBERO | WELLE<br>ARBOL |
| 15* | 353762X1 | 1 | 2 FLAT WASHER | RONDELLE PLATE<br>RONDELLE PIANA | UNTERLEGSCHEIBEN<br>ARANDELA PLANA |
| 16* | 70914687 | 1 | 1 GREASE FITTING | GRAISSEUR<br>INGRASSATORE | DRUCKSCHMIERKOPF<br>ENGRASADOR |
| 17* | W245354B | 1 10 | 1 SPROCKET | BARBOTIN<br>RUOTA MOTRICE | KETTENRAD<br>RUEDA DE CADENA |
| 18* | 354089X1 | 1 1/4" X 1-1/4 | 2 PIN | GOUPILLE<br>COPPIGLIA | STIFT<br>PASADOR |
| 19* | 70931805 | 1 3/8"-16 X 2-1/4 | 2 BOLT | BOULON<br>BULLONE | BOLZEN<br>BULON |
| 20* | 212779 | 1 No 2040<br>43 Pitches | 1 CHAINE | CHAINE<br>CATENA | KETTE<br>CADENA |
| 21* | 70919104 | 1 No 2040 R/C | 1 LINK | MAILLON<br>MAGLIA | GLIED<br>ESLABON |
| 22* | 70919103 | 1 No 2040 R/C | 1 LINK | MAILLON<br>MAGLIA | GLIED<br>ESLABON |
| 23* | W245386B | 1 | 2 BEARING | COUSSINET<br>CUSCINETTO | LAGER<br>COJINETE |

| Granular Fertilizer Distributor<br>Distributeur D'Engrais Granulé<br>Gekörnter Düngerverteilung<br>Spanditrice Di Concimi Granulare<br>Distribuidora De Abonos Granulado | 100-50 | 3 Row<br>3 Rangs<br>3 Reihes<br>3 Lineas<br>3 Lineas |
|---|---|---|

5-PM19-005-A

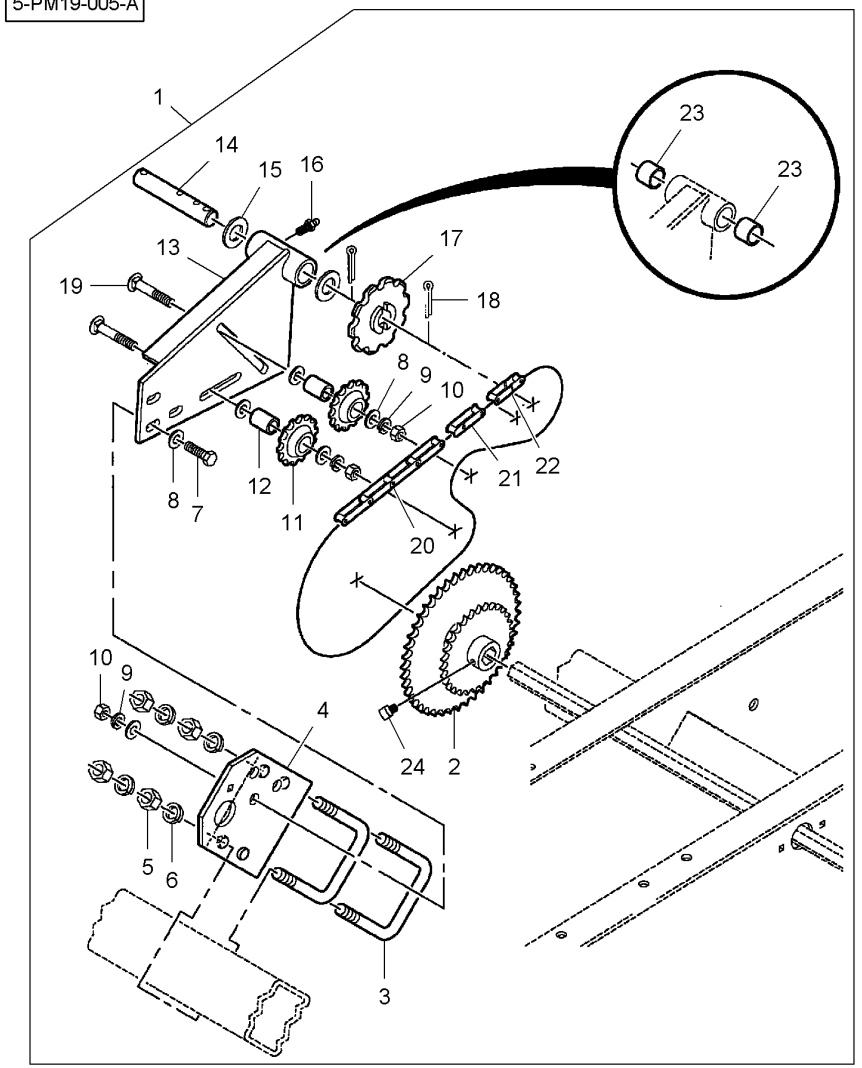


| | | | | | |
|---|---|---|---|---|---|
| 24* | 70923085 | 1 5/16"-18 X 1/2 | **1** SETSCREW | VIS DE BLOCAGE<br>INSIEME VITI | STELLSCHRAUBE<br>SET SCREW |

**Granular Fertilizer Distributor**
**Distributeur D'Engrais Granulé**
**Gekörnter Düngerverteilung**
**Spanditrice Di Concimi Granulare**
**Distribuidora De Abonos Granulado**

# 100-55

**3 Row**
**3 Rangs**
**3 Reihes**
**3 Lineas**
**3 Lineas**

5-PM19-006-A

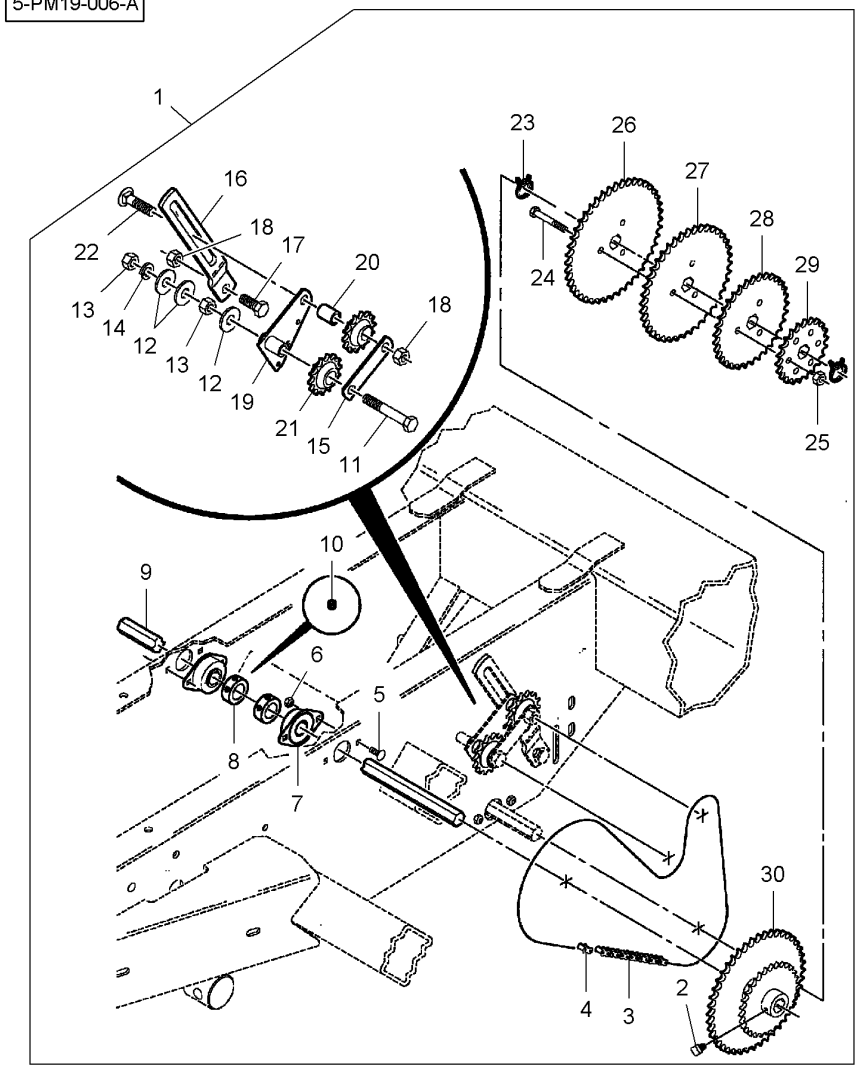


| | | | | | |
|---|---|---|---|---|---|
| 1* | 6000400 | 100-30 No 1<br>100-35 No 1<br>100-40 No 1<br>100-45 No 1<br>100-50 No 1 | 1 | KIT, ATTACHMENT | JEU ACCESSOIRES<br>KIT ACCESSORI | SATZ ANBAUTEILE<br>JUEGO ACCESORIO |
| 2* | 70923085 | 1 5/16"-18 X 1/2 | 1 | SETSCREW | VIS DE BLOCAGE<br>INSIEME VITI | STELLSCHRAUBE<br>SET SCREW |
| 3* | W980264US | 1 No 40<br>105 Pitches | 1 | CHAIN | CHAINE<br>CATENA | KETTE<br>CADENA |
| 4* | 70915515 | 1 No 40 R/C | 1 | LINK | MAILLON<br>MAGLIA | GLIED<br>ESLABON |
| 5* | 364942X1 | 1 1/4"-20 X 5/8 | 4 | BOLT UNC | BOULON UNC<br>BULLONE UNC | MASCH.SCHRB.UNC<br>PERNO UNC |
| 6* | 70923358 | 1 1/4"-20 | 4 | LOCKNUT | ECROU FREIN<br>AUTOBLOCCANTE | SICHERUNGSMUTTER<br>CONTRATUERCA |
| 7* | **W247647B** | 1 | 2 | BEARING ASSY | ROULEMENT<br>CUSCINETTO COMPL | RADIALLAGER<br>RODAMIENTO RAD |
| 8* | **W247234B** | 1 | 2 | COLLAR | COLLERETTE<br>COLLARE | KRAGEN<br>COLLARIN |
| 9* | W248504B | 1 ◀▶ 22" | 1 | SHAFT | ARBRE<br>ALBERO | WELLE<br>ARBOL |
| 10* | 70911712 | 8 5/16"-18 X 5/16 | 1 | SETSCREW | VIS DE BLOCAGE<br>INSIEME VITI | STELLSCHRAUBE<br>SET SCREW |
| 11* | W908513-4 | 1 1/2"-20 X 3-1/4 | 1 | CAPSCREW | VIS BOUCHON<br>TAPPO A VITE | HUTSCHRAUBE<br>TORNILLO TAPON |
| 12* | 70918431 | 1 1/2" | 3 | FLAT WASHER | RONDELLE PLATE<br>RONDELLE PIANA | UNTERLEGSCHEIBEN<br>ARANDELA PLANA |
| 13* | 70919423 | 1 1/2"-20 | 2 | NUT | ECROU<br>DADO | MUTTER<br>TUERCA |
| 14* | Y705046 | 1 1/2" | 1 | LOCK WASHER | RONDELLE FREIN<br>RONDELLA ARRESTO | SICHERUNGSRING<br>ARANDELA SEGURID |
| 15* | **W246431B** | 1 | 1 | STRAP | PATTE<br>CORREGGIA | LASCHE<br>FAJA |
| 16* | W248055B | 1 | 1 | STRAP | PATTE<br>CORREGGIA | LASCHE<br>FAJA |
| 17* | 70921176 | 1 1/2"-13 X 1-1/4 | 1 | BOLT UNC | BOULON UNC<br>BULLONE UNC | MASCH.SCHRB.UNC<br>PERNO UNC |
| 18* | W915793-4 | 1 1/2"-13 | 2 | LOCKNUT | ECROU FREIN<br>AUTOBLOCCANTE | SICHERUNGSMUTTER<br>CONTRATUERCA |
| 19* | W247201B | 1 | 1 | BRACKET | SUPPORT FIXATION<br>STAFFETTA | HALTEARM<br>SOPORTE |
| 20* | WSP1344 | 1 | 1 | SPACER | ENTRETOISE<br>DISTANZIALE | ABSTANDSTUECK<br>DISCO ESPACIADOR |
| 21* | **W247938B** | 1 14 | 2 | SPROCKET | BARBOTIN<br>RUOTA MOTRICE | KETTENRAD<br>RUEDA DE CADENA |
| 22* | 70929094 | 1 1/2"-13 X 2 | 1 | BOLT | BOULON<br>BULLONE | BOLZEN<br>BULON |
| 23* | W247768B | 1 | 2 | CLAMP | COLLIER<br>FASCETTA | HALTESCHELLE<br>ABRAZADERA |
| 24* | 70921160 | 1 5/16"-18 X2-1/4 | 3 | BOLT UNC | BOULON UNC<br>BULLONE UNC | MASCH.SCHRB.UNC<br>PERNO UNC |

| Granular Fertilizer Distributor<br>Distributeur D'Engrais Granulé<br>Gekörnter Düngerverteilung<br>Spanditrice Di Concimi Granulare<br>Distribuidora De Abonos Granulado | 100-55 | 3 Row<br>3 Rangs<br>3 Reihes<br>3 Lineas<br>3 Lineas |
|---|---|---|

5-PM19-006-A

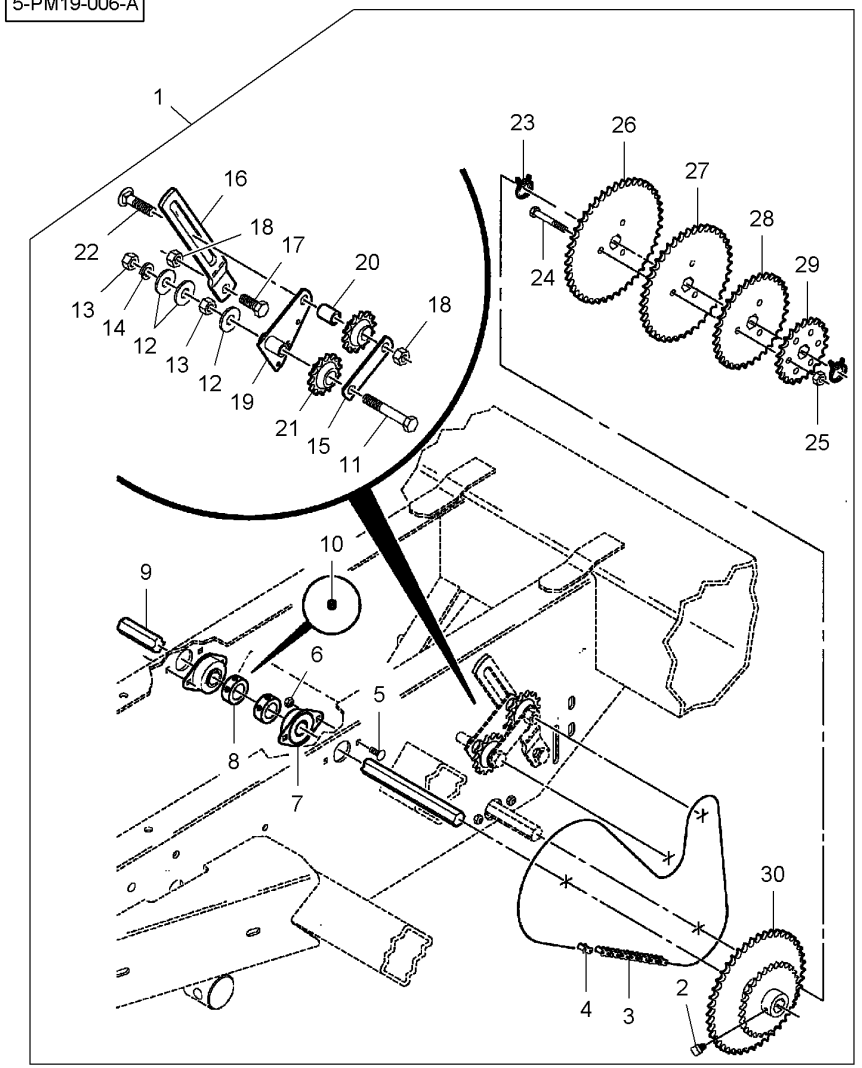


| | | | | | |
|---|---|---|---|---|---|
| 25* | Y704015 | 1 | 5/16"-18 | 3 NUT UNC | ECROU UNC<br>DADO UNC<br>MUTTER UNC<br>TUERCA UNC |
| 26* | 851769 | 1 | 44 | 1 SPROCKET | BARBOTIN<br>RUOTA MOTRICE<br>KETTENRAD<br>RUEDA DE CADENA |
| 27* | 851768 | 1 | 40 | 1 SPROCKET | BARBOTIN<br>RUOTA MOTRICE<br>KETTENRAD<br>RUEDA DE CADENA |
| 28* | 851765 | 1 | 33 | 1 SPROCKET | BARBOTIN<br>RUOTA MOTRICE<br>KETTENRAD<br>RUEDA DE CADENA |
| 29* | W247782B | 1 | 22 | 1 SPROCKET | BARBOTIN<br>RUOTA MOTRICE<br>KETTENRAD<br>RUEDA DE CADENA |
| 30* | W247761B | 1 | 44 - 25 | 1 SPROCKET | BARBOTIN<br>RUOTA MOTRICE<br>KETTENRAD<br>RUEDA DE CADENA |

| Granular Fertilizer Distributor<br>Distributeur D'Engrais Granulé<br>Gekörnter Düngerverteilung<br>Spanditrice Di Concimi Granulare<br>Distribuidora De Abonos Granulado | **100-60** | **8 Row**<br>**8 Rangs**<br>**8 Reihes**<br>**8 Lineas**<br>**8 Lineas** |
|---|---|---|

5-PM19-007-A

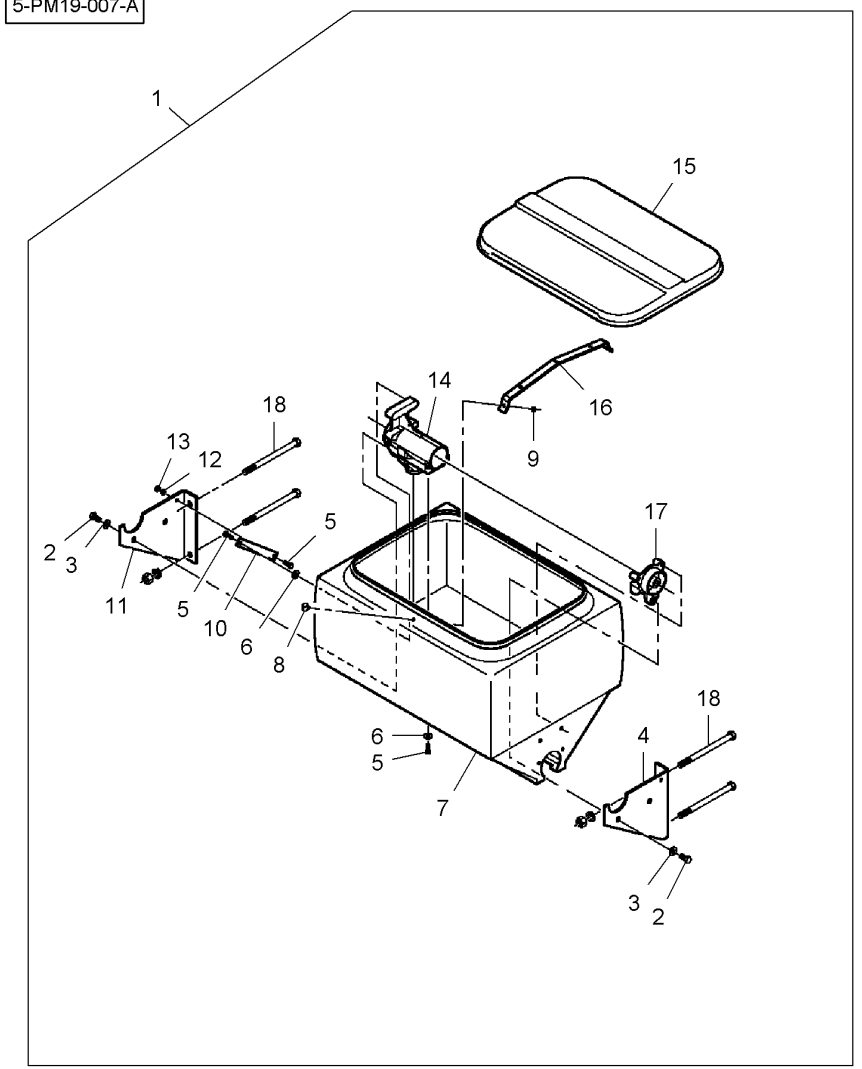


| | | | | | | |
|---|---|---|---|---|---|---|
| 1* | 6000451 | | 100-65 No 1<br>100-70 No 1<br>100-75 No 1 | **1** | KIT, ATTACHMENT | JEU ACCESSOIRES<br>KIT ACCESSORI | SATZ ANBAUTEILE<br>JUEGO ACCESORIO |
| 2* | 703959 | 1 | 1/2"-13 X 1 | **4** | BOLT UNC | BOULON UNC<br>BULLONE UNC | MASCH.SCHRB.UNC<br>PERNO UNC |
| 3* | Y705624 | 1 | 1/2" | **4** | WASHER | RONDELLE<br>RONDELLA | SCHEIBE<br>ARANDELA |
| 4* | W247864B | 1 | ◀ | **2** | BRACKET | SUPPORT FIXATION<br>STAFFETTA | HALTEARM<br>SOPORTE |
| 5* | 772376 | 1 | 3/8"-16 X 7/8 | **22** | SCREW UNC | VIS UNC<br>VITE UNC | SCHRAUBE UNC<br>TORNILLO UNC |
| 6* | 700709603 | 1 | 3/8" | **20** | FLAT WASHER | RONDELLE PLATE<br>RONDELLE PIANA | UNTERLEGSCHEIBEN<br>ARANDELA PLANA |
| 7* | W248357B | 1 | | **2** | HOPPER | TREMIE<br>TRAMOGGIA | KORNTANK<br>TOLVA |
| 8* | 70936460 | 1 | 5/16"-18 X 3/4 | **4** | SCREW | VIS<br>VITE | SCHRAUBE<br>TORNILLO |
| 9* | Y704015 | 1 | 5/16"-18 | **4** | NUT UNC | ECROU UNC<br>DADO UNC | MUTTER UNC<br>TUERCA UNC |
| 10* | 854389 | 1 | | **2** | STRAP | PATTE<br>CORREGGIA | LASCHE<br>FAJA |
| 11* | W247865B | 1 | ▶ | **2** | BRACKET | SUPPORT FIXATION<br>STAFFETTA | HALTEARM<br>SOPORTE |
| 12* | 705038 | 1 | 3/8" | **2** | LOCK WASHER | RONDELLE FREIN<br>RONDELLA ARRESTO | SICHERUNGSRING<br>ARANDELA SEGURID |
| 13* | 704023 | 1 | 3/8"-16 | **2** | NUT UNC | ECROU UNC<br>DADO UNC | MUTTER UNC<br>TUERCA UNC |
| 14* | W247862B | 1 | | **2** | BRACKET | SUPPORT FIXATION<br>STAFFETTA | HALTEARM<br>SOPORTE |
| 15* | W248358B | 1 | | **2** | LID | PLAQUE COUVERCLE<br>COPERTA | ABDECKPLATTE<br>COBERTURA |
| 16* | W247863B | 1 | | **2** | STRAP | PATTE<br>CORREGGIA | LASCHE<br>FAJA |
| 17* | W245902B | 1 | | **2** | BEARING | COUSSINET<br>CUSCINETTO | LAGER<br>COJINETE |
| 18* | W908225-4 | 1 | 5/8"-11 X 9 | **4** | BOLT UNC | BOULON UNC<br>BULLONE UNC | MASCH.SCHRB.UNC<br>PERNO UNC |

| Granular Fertilizer Distributor<br>Distributeur D'Engrais Granulé<br>Gekörnter Düngerverteilung<br>Spanditrice Di Concimi Granulare<br>Distribuidora De Abonos Granulado | **100-65** | **8 Row**<br>**8 Rangs**<br>**8 Reihes**<br>**8 Lineas**<br>**8 Lineas** |
|---|---|---|

5-PM19-008-A

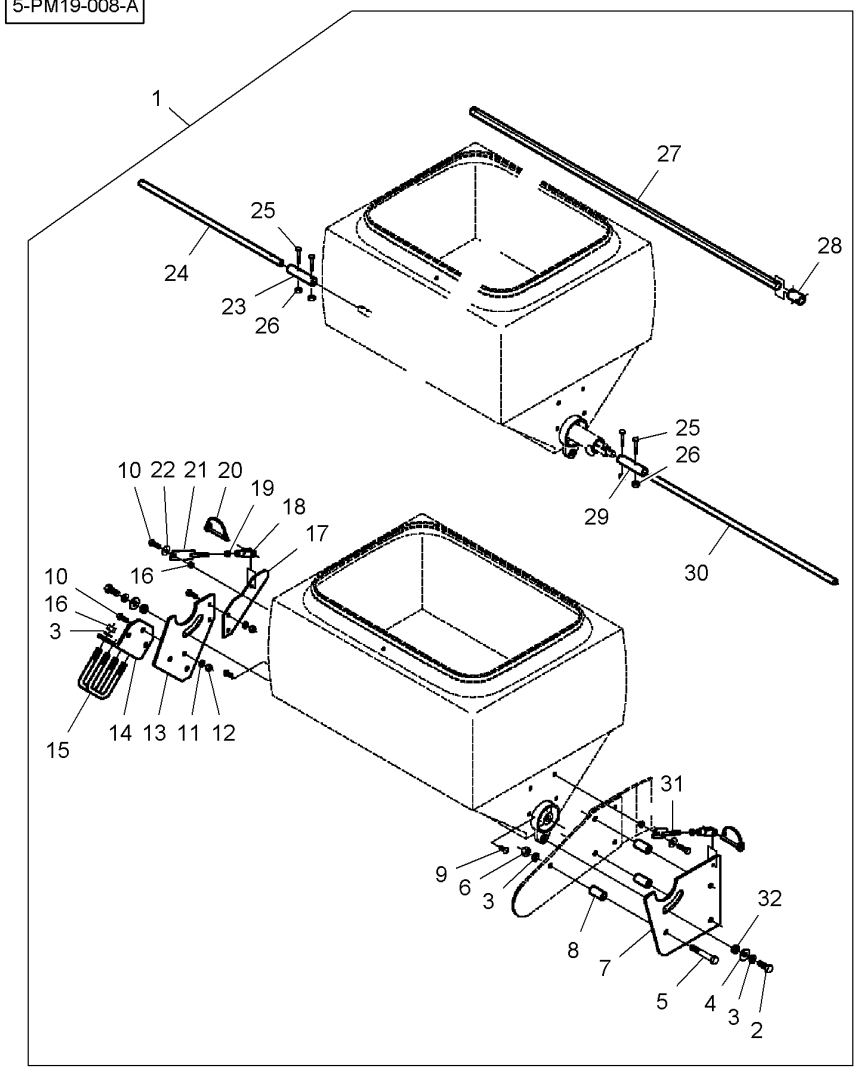


| | | | | | |
|---|---|---|---|---|---|
| 1* | 6000451 | 100-60 No 1<br>100-70 No 1<br>100-75 No 1 | **1** | KIT, ATTACHMENT | JEU ACCESSOIRES<br>KIT ACCESSORI | SATZ ANBAUTEILE<br>JUEGO ACCESORIO |
| 2* | 7701188 | 1 1/2"-13 X 1-1/4 | **4** | BOLT UNC | BOULON UNC<br>BULLONE UNC | MASCH.SCHRB.UNC<br>PERNO UNC |
| 3* | 705046 | 1 1/2" | **14** | LOCK WASHER | RONDELLE FREIN<br>RONDELLA ARRESTO | SICHERUNGSRING<br>ARANDELA SEGURID |
| 4* | 700717592 | 1 | **4** | WASHER | RONDELLE<br>RONDELLA | SCHEIBE<br>ARANDELA |
| 5* | 703751 | 1 1/2"-13 X 3-1/4 | **6** | BOLT UNC | BOULON UNC<br>BULLONE UNC | MASCH.SCHRB.UNC<br>PERNO UNC |
| 6* | 704031 | 1 1/2"-13 | **10** | NUT UNC | ECROU UNC<br>DADO UNC | MUTTER UNC<br>TUERCA UNC |
| 7* | N857637 | 1 ◀ | **2** | BRACKET | SUPPORT FIXATION<br>STAFFETTA | HALTEARM<br>SOPORTE |
| 8* | N857647 | 1 | **6** | SPACER | ENTRETOISE<br>DISTANZIALE | ABSTANDSTUECK<br>DISCO ESPACIADOR |
| 9* | 700701905 | 1 3/8"-16 X 3/4 | **4** | SCREW | VIS<br>VITE | SCHRAUBE<br>TORNILLO |
| 10* | 702035 | 1 3/8"-16 X 1-1/4 | **14** | BOLT UNC | BOULON UNC<br>BULLONE UNC | MASCH.SCHRB.UNC<br>PERNO UNC |
| 11* | 705038 | 1 3/8" | **10** | LOCK WASHER | RONDELLE FREIN<br>RONDELLA ARRESTO | SICHERUNGSRING<br>ARANDELA SEGURID |
| 12* | 704023 | 1 3/8"-16 | **10** | NUT UNC | ECROU UNC<br>DADO UNC | MUTTER UNC<br>TUERCA UNC |
| 13* | N857638 | 1 ▶ | **2** | BRACKET | SUPPORT FIXATION<br>STAFFETTA | HALTEARM<br>SOPORTE |
| 14* | N857668 | 1 | **2** | SHANK | ANGLE<br>FUSO | SCHAFT<br>MANGO. |
| 15* | 852211 | 1 1/2"-13 | **4** | U BOLT | ETRIER FILETE<br>BULLONE A STAFFA | BUEGELSCHRAUBE<br>BRIDA EN U |
| 16* | K3620 | 1 1/2" X 1/4 | **4** | SPACER | ENTRETOISE<br>DISTANZIALE | ABSTANDSTUECK<br>DISCO ESPACIADOR |
| 17* | N857643 | 1 | **2** | BRACKET | SUPPORT FIXATION<br>STAFFETTA | HALTEARM<br>SOPORTE |
| 18* | 66498 | 1 5/16"-24 | **4** | YOKE | CHAPE ARTICULAT<br>FORCELLA. | GELENKGABEL<br>YUGO |
| 19* | 704429 | 1 5/16"-24 | **2** | NUT UNF | ECROU UNF<br>DADO UNF | MUTTER UNF<br>TUERCA UNF |
| 20* | W245430B | 1 | **4** | CLIP | PATTE D'ATTACHE<br>FERMAGLIO | SCHELLE<br>CLIP |
| 21* | N857592 | 1 | **2** | PLATE | PLAQUE<br>PIASTRA | PLATTE<br>PLATO |
| 22* | 700717523 | 1 | **4** | WASHER | RONDELLE<br>RONDELLA | SCHEIBE<br>ARANDELA |
| 23* | N857588 | 1 | **1** | COUPLER | COUPLEUR<br>ACCOPPIATORE | KUPPLER<br>ACOPLADOR |
| 24* | N857641 | 1 | **1** | SHAFT | ARBRE<br>ALBERO | WELLE<br>ARBOL |
| 25* | 7703473 | 1 1/4"-20 X 1-1/4 | **4** | SCREW UNC | VIS UNC<br>VITE UNC | SCHRAUBE UNC<br>TORNILLO UNC |
| 26* | 10161 | 1 1/4"-20 | **4** | LOCKNUT | ECROU FREIN<br>AUTOBLOCCANTE | SICHERUNGSMUTTER<br>CONTRATUERCA |

| Granular Fertilizer Distributor<br>Distributeur D'Engrais Granulé<br>Gekörnter Düngerverteilung<br>Spanditrice Di Concimi Granulare<br>Distribuidora De Abonos Granulado | 100-65 | 8 Row<br>8 Rangs<br>8 Reihes<br>8 Lineas<br>8 Lineas |
|---|---|---|

5-PM19-008-A

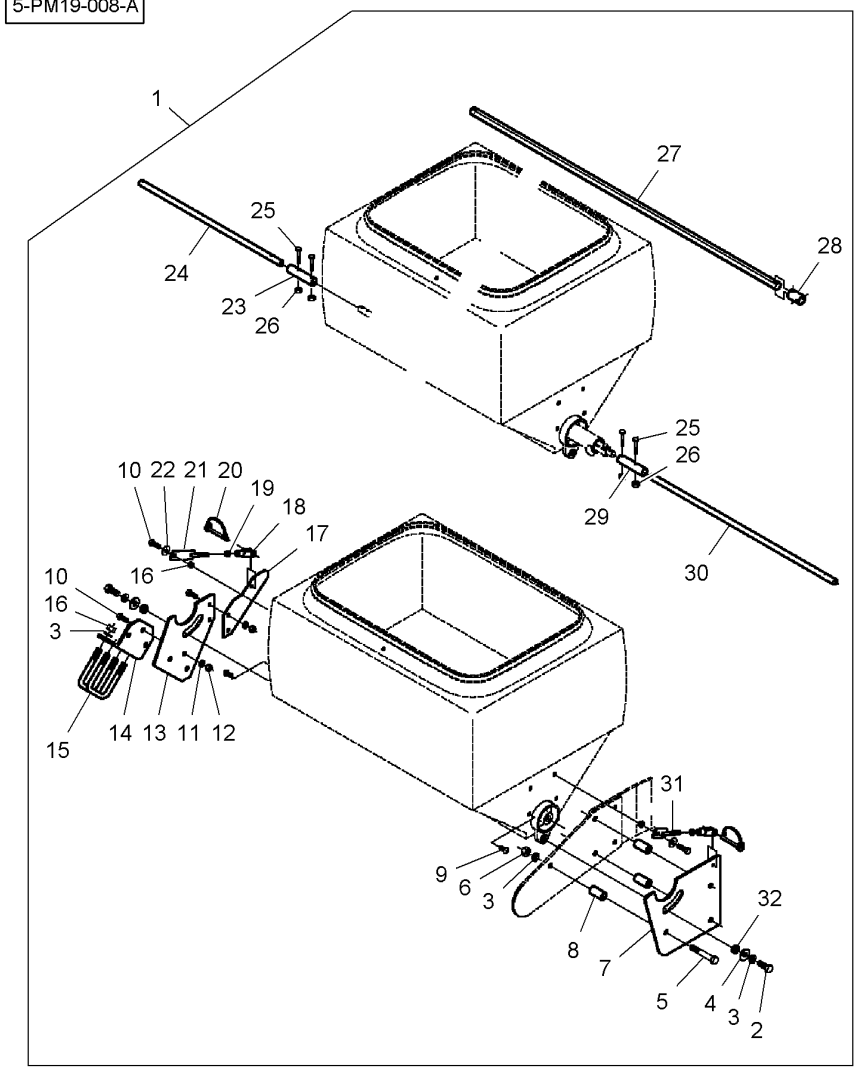


| | | | | | |
|---|---|---|---|---|---|
| 27* | W248020B | 1 | 1 | SHAFT | ARBRE<br>ALBERO | WELLE<br>ARBOL |
| 28* | W246810B | 1 | 1 | COUPLER | COUPLEUR<br>ACCOPPIATORE | KUPPLER<br>ACOPLADOR |
| 29* | N857589 | 1 | 1 | COUPLER | COUPLEUR<br>ACCOPPIATORE | KUPPLER<br>ACOPLADOR |
| 30* | N857640 | 1 | 1 | SHAFT | ARBRE<br>ALBERO | WELLE<br>ARBOL |
| 31* | N857649 | 1 | 2 | PLATE | PLAQUE<br>PIASTRA | PLATTE<br>PLATO |
| 32* | 2341P | 1 | 4 | SPACER | ENTRETOISE<br>DISTANZIALE | ABSTANDSTUECK<br>DISCO ESPACIADOR |

| Granular Fertilizer Distributor<br>Distributeur D'Engrais Granulé<br>Gekörnter Düngerverteilung<br>Spanditrice Di Concimi Granulare<br>Distribuidora De Abonos Granulado | **100-70** | **8 Row**<br>**8 Rangs**<br>**8 Reihes**<br>**8 Lineas**<br>**8 Lineas** |
|---|---|---|

5-PM19-009-A

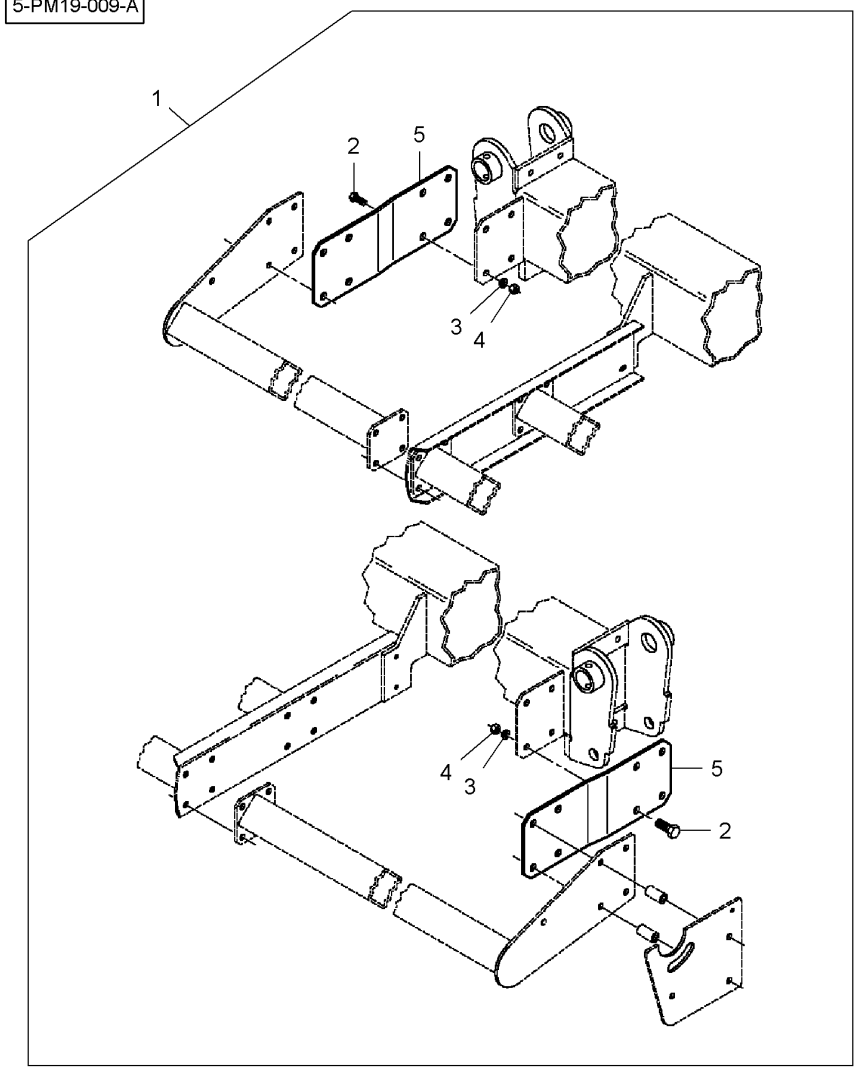


| | | | | | |
|---|---|---|---|---|---|
| 1* | 6000451 | 100-60 No 1<br>100-65 No 1<br>100-75 No 1 | **1** | KIT, ATTACHMENT | JEU ACCESSOIRES<br>KIT ACCESSORI | SATZ ANBAUTEILE<br>JUEGO ACCESORIO |
| 2* | 7701188 | 1 1/2"-13 X 1-1/4 | **8** | BOLT UNC | BOULON UNC<br>BULLONE UNC | MASCH.SCHRB.UNC<br>PERNO UNC |
| 3* | 705046 | 1 1/2" | **8** | LOCK WASHER | RONDELLE FREIN<br>RONDELLA ARRESTO | SICHERUNGSRING<br>ARANDELA SEGURID |
| 4* | 704031 | 1 1/2"-13 | **8** | NUT UNC | ECROU UNC<br>DADO UNC | MUTTER UNC<br>TUERCA UNC |
| 5* | 853009 | 1 | **2** | BAR | BARRE<br>BARRA | STAB<br>BARRA |

| Granular Fertilizer Distributor<br>Distributeur D'Engrais Granulé<br>Gekörnter Düngerverteilung<br>Spanditrice Di Concimi Granulare<br>Distribuidora De Abonos Granulado | 100-75 | 8 Row<br>8 Rangs<br>8 Reihes<br>8 Lineas<br>8 Lineas |
|---|---|---|

5-PM19-010-A

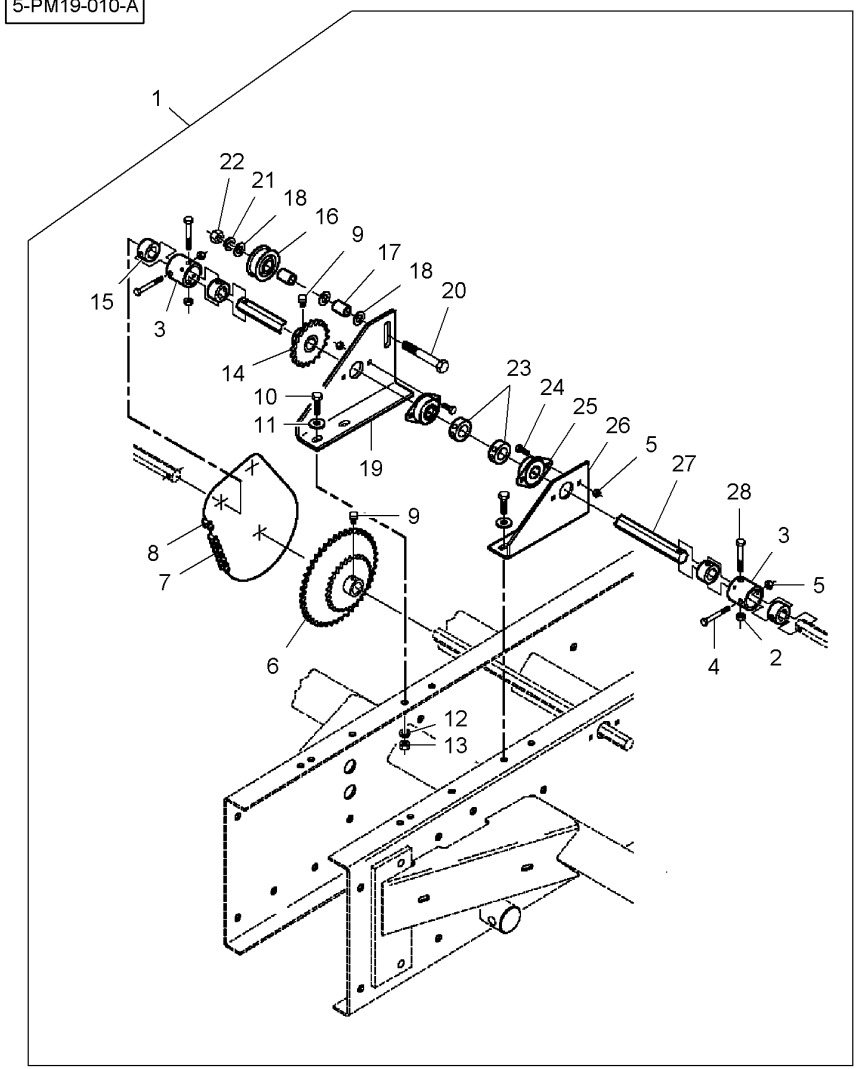


| | | | | | |
|---|---|---|---|---|---|
| 1* | 6000451 | 100-60 No 1<br>100-65 No 1<br>100-70 No 1 | 1 | KIT, ATTACHMENT | JEU ACCESSOIRES<br>KIT ACCESSORI | SATZ ANBAUTEILE<br>JUEGO ACCESORIO |
| 2* | 704163 | 1 5/16"-18 | 2 | LOCKNUT | ECROU FREIN<br>AUTOBLOCCANTE | SICHERUNGSMUTTER<br>CONTRATUERCA |
| 3* | **W247687B** | 1 | 2 | COUPLING | CRABOT<br>ACCOPPIAMENTO | KUPPLUNG<br>ACOPLAMIENTO |
| 4* | 7773849 | 1 1/4"-20 X 2-1/4 | 2 | BOLT UNC | BOULON UNC<br>BULLONE UNC | MASCH.SCHRB.UNC<br>PERNO UNC |
| 5* | 10161 | 1 1/4"-20 | 6 | LOCKNUT | ECROU FREIN<br>AUTOBLOCCANTE | SICHERUNGSMUTTER<br>CONTRATUERCA |
| 6* | W247761B | 1 25 / 44 | 1 | SPROCKET | BARBOTIN<br>RUOTA MOTRICE | KETTENRAD<br>RUEDA DE CADENA |
| 7* | 7085988 | 1 No 40 | 1 | ROLL OF CHAIN | ROULEAU CHAINE<br>RULLO PER CATENA | KETTE METERWARE<br>CADENA 5M |
| 8* | 47217 | 1 No 40 R/C | 2 | LINK | MAILLON<br>MAGLIA | GLIED<br>ESLABON |
| 9* | 70923085 | 1 5/16"-18 X 1/2 | 2 | SETSCREW | VIS DE BLOCAGE<br>INSIEME VITI | STELLSCHRAUBE<br>SET SCREW |
| 10* | 702035 | 1 3/8"-16 X 1-1/4 | 4 | BOLT UNC | BOULON UNC<br>BULLONE UNC | MASCH.SCHRB.UNC<br>PERNO UNC |
| 11* | 700717523 | 1 | 4 | WASHER | RONDELLE<br>RONDELLA | SCHEIBE<br>ARANDELA |
| 12* | 705038 | 1 3/8" | 4 | LOCK WASHER | RONDELLE FREIN<br>RONDELLA ARRESTO | SICHERUNGSRING<br>ARANDELA SEGURID |
| 13* | 704023 | 1 3/8"-16 | 4 | NUT UNC | ECROU UNC<br>DADO UNC | MUTTER UNC<br>TUERCA UNC |
| 14* | **W247690B** | 1 20 | 1 | SPROCKET | BARBOTIN<br>RUOTA MOTRICE | KETTENRAD<br>RUEDA DE CADENA |
| 15* | **W247688B** | 1 | 4 | ADAPTOR | ADAPTATEUR<br>ADATTATORE | REDUZIERNIPPEL<br>ADAPTADOR |
| 16* | **853932** | 1 | 1 | ROLLER | GALET<br>ROTELLA | ROLLE<br>RODILLO |
| 17* | WSP1344 | 1 | 2 | SPACER | ENTRETOISE<br>DISTANZIALE | ABSTANDSTUECK<br>DISCO ESPACIADOR |
| 18* | 700717592 | 1 | 4 | WASHER | RONDELLE<br>RONDELLA | SCHEIBE<br>ARANDELA |
| 19* | N857580 | 1 ▶ | 1 | BRACKET | SUPPORT FIXATION<br>STAFFETTA | HALTEARM<br>SOPORTE |
| 20* | 773374 | 1 1/2"-13 X 3-1/2 | 1 | BOLT UNC | BOULON UNC<br>BULLONE UNC | MASCH.SCHRB.UNC<br>PERNO UNC |
| 21* | 705046 | 1 1/2" | 1 | LOCK WASHER | RONDELLE FREIN<br>RONDELLA ARRESTO | SICHERUNGSRING<br>ARANDELA SEGURID |
| 22* | 704031 | 1 1/2"-13 | 1 | NUT UNC | ECROU UNC<br>DADO UNC | MUTTER UNC<br>TUERCA UNC |
| 23* | **W247234B** | 1 | 2 | COLLAR | COLLERETTE<br>COLLARE | KRAGEN<br>COLLARIN |
| 23* | 70911712 | 23 5/16"-18 X 5/16 | 2 | SETSCREW | VIS DE BLOCAGE<br>INSIEME VITI | STELLSCHRAUBE<br>SET SCREW |
| 24* | 7703457 | 1 1/4"-20 X 3/4 | 4 | BOLT UNC | BOULON UNC<br>BULLONE UNC | MASCH.SCHRB.UNC<br>PERNO UNC |
| 25* | **W247647B** | 1 | 2 | BEARING ASSY | ROULEMENT<br>CUSCINETTO COMPL | RADIALLAGER<br>RODAMIENTO RAD |

| Granular Fertilizer Distributor<br>Distributeur D'Engrais Granulé<br>Gekörnter Düngerverteilung<br>Spanditrice Di Concimi Granulare<br>Distribuidora De Abonos Granulado | 100-75 | 8 Row<br>8 Rangs<br>8 Reihes<br>8 Lineas<br>8 Lineas |
|---|---|---|

5-PM19-010-A

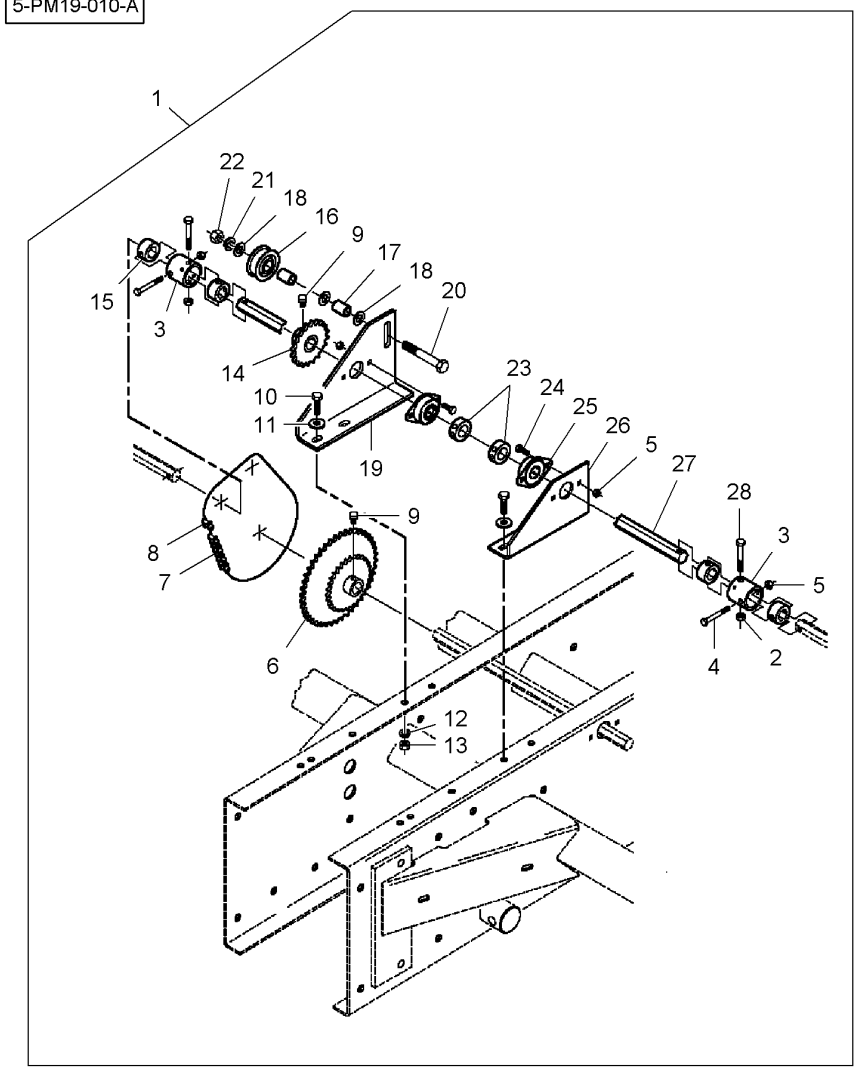


| | | | | | |
|---|---|---|---|---|---|
| 26* | N857576 | 1 ◀ | 1 | BRACKET | SUPPORT FIXATION<br>STAFFETTA<br>HALTEARM<br>SOPORTE |
| 27* | N857639 | 1 | 1 | SHAFT | ARBRE<br>ALBERO<br>WELLE<br>ARBOL |
| 28* | 7771744 | 1 5/16"-18 X 2-1/4 | 2 | BOLT UNC | BOULON UNC<br>BULLONE UNC<br>MASCH.SCHRB.UNC<br>PERNO UNC |

| Granular Fertilizer Distributor<br>Distributeur D'Engrais Granulé<br>Gekörnter Düngerverteilung<br>Spanditrice Di Concimi Granulare<br>Distribuidora De Abonos Granulado | 100-80 | 12 Rows<br>12 Rangs<br>12 Reihes<br>12 Lineas<br>12 Lineas |
|---|---|---|

5-PM19-011-A

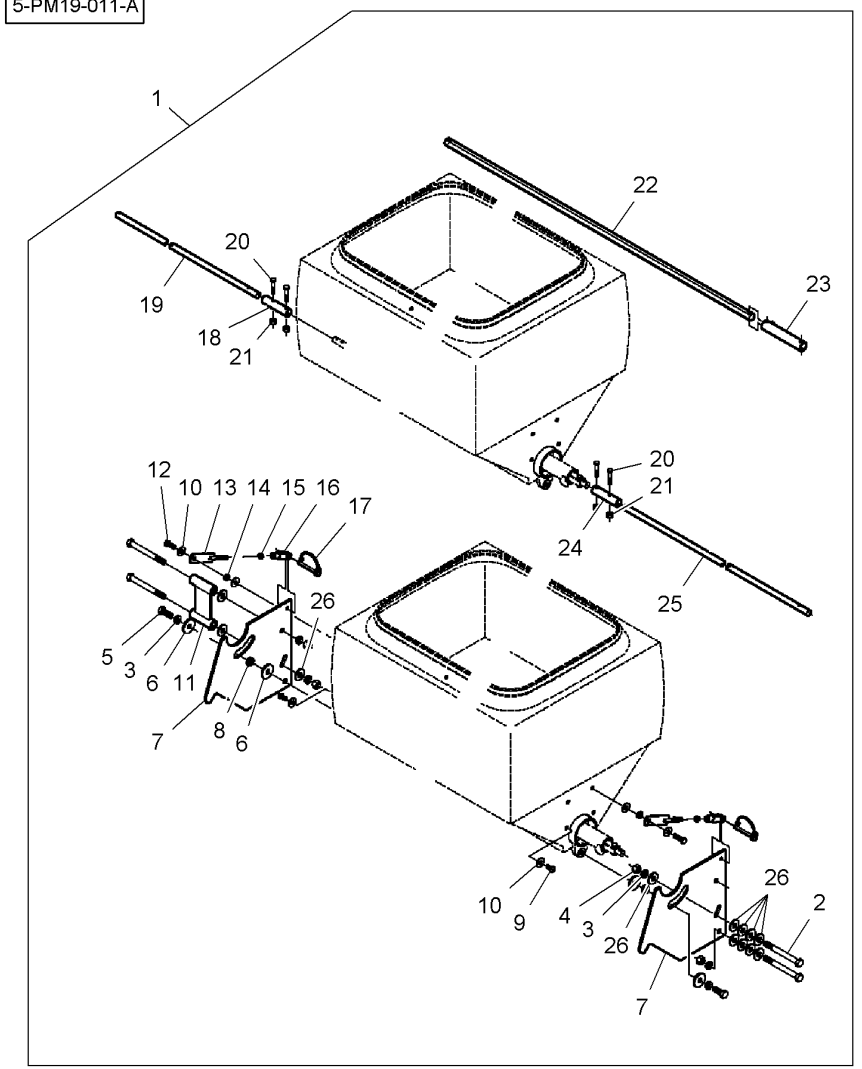


| | | | | | |
|---|---|---|---|---|---|
| 1* | 6000443 | 100-85 No 1<br>100-90 No 1 | 1 | KIT, ATTACHMENT | JEU ACCESSOIRES<br>KIT ACCESSORI | SATZ ANBAUTEILE<br>JUEGO ACCESORIO |
| 2* | 7701279 | 1 1/2"-13 X 5 | 8 | BOLT UNC | BOULON UNC<br>BULLONE UNC | MASCH.SCHRB.UNC<br>PERNO UNC |
| 3* | 705046 | 1 1/2" | 12 | LOCK WASHER | RONDELLE FREIN<br>RONDELLA ARRESTO | SICHERUNGSRING<br>ARANDELA SEGURID |
| 4* | 704031 | 1 1/2"-13 | 8 | NUT UNC | ECROU UNC<br>DADO UNC | MUTTER UNC<br>TUERCA UNC |
| 5* | 7701188 | 1 1/2"-13 X 1-1/4 | 4 | BOLT UNC | BOULON UNC<br>BULLONE UNC | MASCH.SCHRB.UNC<br>PERNO UNC |
| 6* | 700717548 | 1 | 8 | WASHER | RONDELLE<br>RONDELLA | SCHEIBE<br>ARANDELA |
| 7* | N857575 | 1 | 4 | BRACKET | SUPPORT FIXATION<br>STAFFETTA | HALTEARM<br>SOPORTE |
| 8* | 2341P | 1 | 4 | SPACER | ENTRETOISE<br>DISTANZIALE | ABSTANDSTUECK<br>DISCO ESPACIADOR |
| 9* | 700701905 | 1 3/8"-16 X 3/4 | 4 | SCREW | VIS<br>VITE | SCHRAUBE<br>TORNILLO |
| 10* | 700717523 | 1 | 12 | WASHER | RONDELLE<br>RONDELLA | SCHEIBE<br>ARANDELA |
| 11* | N857585 | 1 | 2 | SPACER | ENTRETOISE<br>DISTANZIALE | ABSTANDSTUECK<br>DISCO ESPACIADOR |
| 12* | 702035 | 1 3/8"-16 X 1-1/4 | 4 | BOLT UNC | BOULON UNC<br>BULLONE UNC | MASCH.SCHRB.UNC<br>PERNO UNC |
| 13* | N857592 | 1 | 4 | PLATE | PLAQUE<br>PIASTRA | PLATTE<br>PLATO |
| 14* | K3620 | 1 | 4 | SPACER | ENTRETOISE<br>DISTANZIALE | ABSTANDSTUECK<br>DISCO ESPACIADOR |
| 15* | 704429 | 1 5/16"-24 | 4 | NUT UNF | ECROU UNF<br>DADO UNF | MUTTER UNF<br>TUERCA UNF |
| 16* | 66498 | 1 5/16"-24 | 4 | YOKE | CHAPE ARTICULAT<br>FORCELLA. | GELENKGABEL<br>YUGO |
| 17* | W245430B | 1 | 4 | CLIP | PATTE D'ATTACHE<br>FERMAGLIO | SCHELLE<br>CLIP |
| 18* | N857588 | 1 | 1 | COUPLER | COUPLEUR<br>ACCOPPIATORE | KUPPLER<br>ACOPLADOR |
| 19* | N857578 | 1 | 1 | SHAFT | ARBRE<br>ALBERO | WELLE<br>ARBOL |
| 20* | 7703473 | 1 1/4"-20 X 1-1/4 | 4 | SCREW UNC | VIS UNC<br>VITE UNC | SCHRAUBE UNC<br>TORNILLO UNC |
| 21* | 10161 | 1 1/4"-20 | 4 | LOCKNUT | ECROU FREIN<br>AUTOBLOCCANTE | SICHERUNGSMUTTER<br>CONTRATUERCA |
| 22* | W248020B | 1 | 1 | SHAFT | ARBRE<br>ALBERO | WELLE<br>ARBOL |
| 23* | W246853B | 1 | 1 | TUBE | TUBE<br>TUBO. | ROHR<br>TUBO. |
| 24* | N857589 | 1 | 1 | COUPLER | COUPLEUR<br>ACCOPPIATORE | KUPPLER<br>ACOPLADOR |
| 25* | N857579 | 1 | 1 | SHAFT | ARBRE<br>ALBERO | WELLE<br>ARBOL |
| 26* | 700717592 | 1 | 24 | WASHER | RONDELLE<br>RONDELLA | SCHEIBE<br>ARANDELA |

| Granular Fertilizer Distributor<br>Distributeur D'Engrais Granulé<br>Gekörnter Düngerverteilung<br>Spanditrice Di Concimi Granulare<br>Distribuidora De Abonos Granulado | **100-85** | **12 Rows**<br>**12 Rangs**<br>**12 Reihes**<br>**12 Lineas**<br>**12 Lineas** |
|---|---|---|

5-PM19-012-A

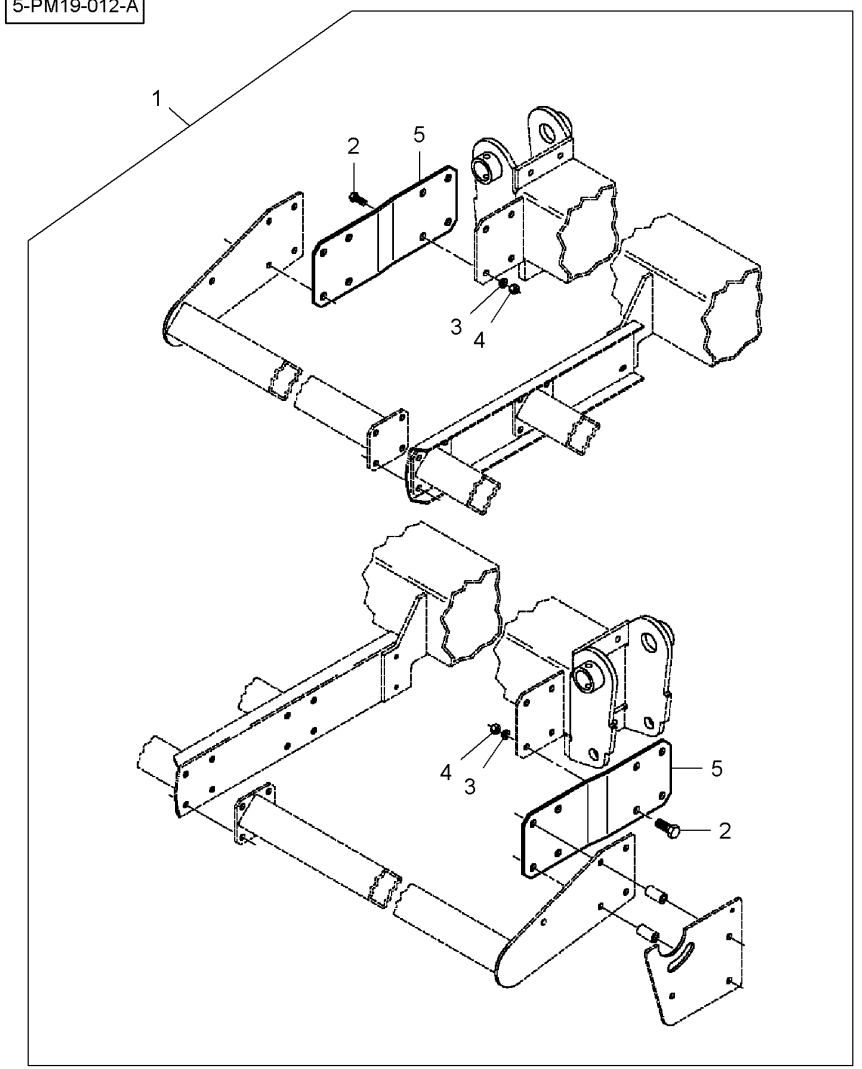


| | | | | | |
|---|---|---|---|---|---|
| 1* | 6000443 | 100-80 No 1<br>100-90 No 1 | **1** KIT, ATTACHMENT | JEU ACCESSOIRES<br>KIT ACCESSORI | SATZ ANBAUTEILE<br>JUEGO ACCESORIO |
| 2* | 7701188 | 1 1/2"-13 X 1-1/4 | **8** BOLT UNC | BOULON UNC<br>BULLONE UNC | MASCH.SCHRB.UNC<br>PERNO UNC |
| 3* | 705046 | 1 1/2" | **8** LOCK WASHER | RONDELLE FREIN<br>RONDELLA ARRESTO | SICHERUNGSRING<br>ARANDELA SEGURID |
| 4* | 704031 | 1 1/2"-13 | **8** NUT UNC | ECROU UNC<br>DADO UNC | MUTTER UNC<br>TUERCA UNC |
| 5* | 853009 | 1 | **2** BAR | BARRE<br>BARRA | STAB<br>BARRA |

| Granular Fertilizer Distributor<br>Distributeur D'Engrais Granulé<br>Gekörnter Düngerverteilung<br>Spanditrice Di Concimi Granulare<br>Distribuidora De Abonos Granulado | **100-90** | **12 Rows**<br>**12 Rangs**<br>**12 Reihes**<br>**12 Lineas**<br>**12 Lineas** |
|---|---|---|

5-PM19-013-A

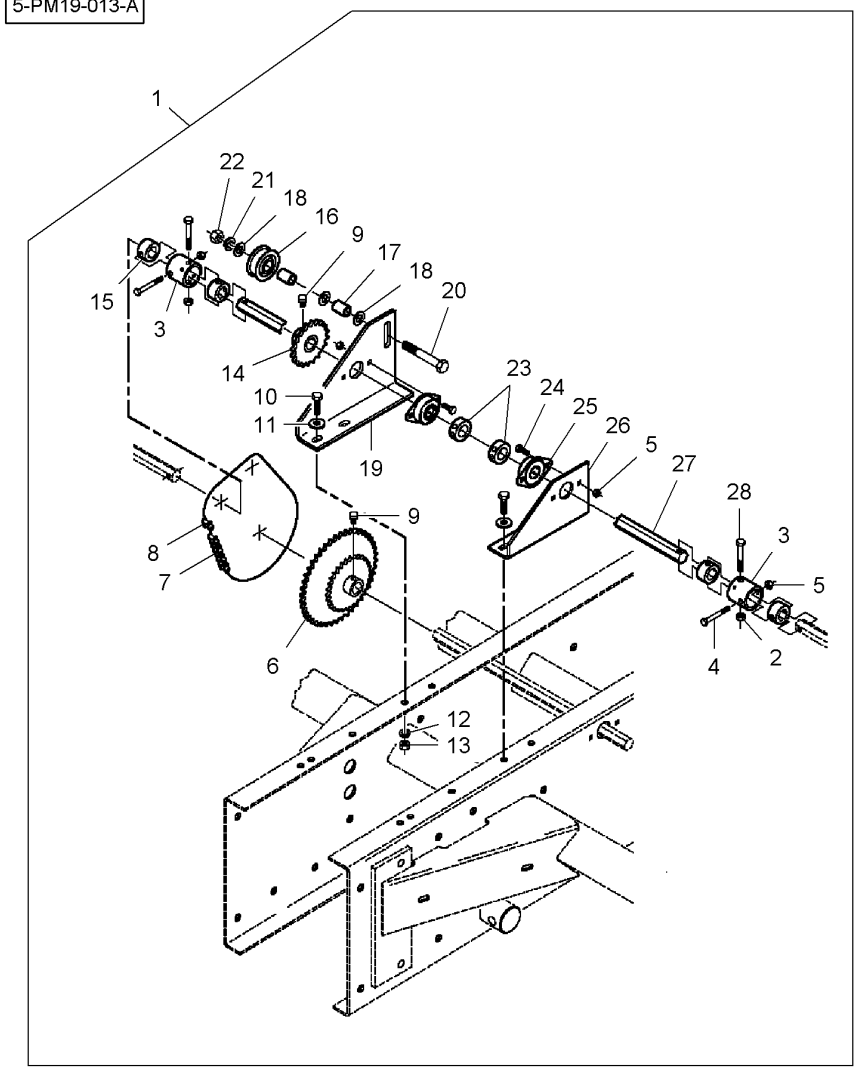


| | | | | | |
|---|---|---|---|---|---|
| 1* | 6000443 | 100-80 No 1<br>100-85 No 1 | **1** | KIT, ATTACHMENT | JEU ACCESSOIRES<br>KIT ACCESSORI | SATZ ANBAUTEILE<br>JUEGO ACCESORIO |
| 2* | 704163 | 1 5/16"-18 | **2** | LOCKNUT | ECROU FREIN<br>AUTOBLOCCANTE | SICHERUNGSMUTTER<br>CONTRATUERCA |
| 3* | **W247687B** | 1 | **2** | COUPLING | CRABOT<br>ACCOPPIAMENTO | KUPPLUNG<br>ACOPLAMIENTO |
| 4* | 7773849 | 1 1/4"-20 X 2-1/4 | **2** | BOLT UNC | BOULON UNC<br>BULLONE UNC | MASCH.SCHRB.UNC<br>PERNO UNC |
| 5* | 10161 | 1 1/4"-20 | **6** | LOCKNUT | ECROU FREIN<br>AUTOBLOCCANTE | SICHERUNGSMUTTER<br>CONTRATUERCA |
| 6* | W247761B | 1 25 / 44 | **1** | SPROCKET | BARBOTIN<br>RUOTA MOTRICE | KETTENRAD<br>RUEDA DE CADENA |
| 7* | 7085988 | 1 No 40<br>(10 Foot Bulk) | **1** | ROLL OF CHAIN | ROULEAU CHAINE<br>RULLO PER CATENA | KETTE METERWARE<br>CADENA 5M |
| 8* | 47217 | 1 No 40 R/C | **2** | LINK | MAILLON<br>MAGLIA | GLIED<br>ESLABON |
| 9* | 70923085 | 1 5/16"-18 X 1/2 | **2** | SETSCREW | VIS DE BLOCAGE<br>INSIEME VITI | STELLSCHRAUBE<br>SET SCREW |
| 10* | 702035 | 1 3/8-"16 X 1-1/4 | **4** | BOLT UNC | BOULON UNC<br>BULLONE UNC | MASCH.SCHRB.UNC<br>PERNO UNC |
| 11* | 700717523 | 1 | **4** | WASHER | RONDELLE<br>RONDELLA | SCHEIBE<br>ARANDELA |
| 12* | 705038 | 1 3/8" | **4** | LOCK WASHER | RONDELLE FREIN<br>RONDELLA ARRESTO | SICHERUNGSRING<br>ARANDELA SEGURID |
| 13* | 704023 | 1 3/8"-16 | **4** | NUT UNC | ECROU UNC<br>DADO UNC | MUTTER UNC<br>TUERCA UNC |
| 14* | **W247690B** | 1 20 | **1** | SPROCKET | BARBOTIN<br>RUOTA MOTRICE | KETTENRAD<br>RUEDA DE CADENA |
| 15* | **W247688B** | 1 | **4** | ADAPTOR | ADAPTATEUR<br>ADATTATORE | REDUZIERNIPPEL<br>ADAPTADOR |
| 16* | **853932** | 1 | **1** | ROLLER | GALET<br>ROTELLA | ROLLE<br>RODILLO |
| 17* | WSP1344 | 1 | **2** | SPACER | ENTRETOISE<br>DISTANZIALE | ABSTANDSTUECK<br>DISCO ESPACIADOR |
| 18* | 700717592 | 1 | **4** | WASHER | RONDELLE<br>RONDELLA | SCHEIBE<br>ARANDELA |
| 19* | N857580 | 1 ▶ | **1** | BRACKET | SUPPORT FIXATION<br>STAFFETTA | HALTEARM<br>SOPORTE |
| 20* | 773374 | 1 1/2"-13 X 3-1/2 | **1** | BOLT UNC | BOULON UNC<br>BULLONE UNC | MASCH.SCHRB.UNC<br>PERNO UNC |
| 21* | 705046 | 1 1/2" | **1** | LOCK WASHER | RONDELLE FREIN<br>RONDELLA ARRESTO | SICHERUNGSRING<br>ARANDELA SEGURID |
| 22* | 704031 | 1 1/2"-13 | **1** | NUT UNC | ECROU UNC<br>DADO UNC | MUTTER UNC<br>TUERCA UNC |
| 23* | **W247234B** | 1 | **2** | COLLAR | COLLERETTE<br>COLLARE | KRAGEN<br>COLLARIN |
| 23* | 70911712 | 23 5/16"-18 X 5/16 | **2** | SETSCREW | VIS DE BLOCAGE<br>INSIEME VITI | STELLSCHRAUBE<br>SET SCREW |
| 24* | 7703457 | 1 1/4"-20 X 3/4 | **4** | BOLT UNC | BOULON UNC<br>BULLONE UNC | MASCH.SCHRB.UNC<br>PERNO UNC |
| 25* | **W247647B** | 1 | **2** | BEARING ASSY | ROULEMENT<br>CUSCINETTO COMPL | RADIALLAGER<br>RODAMIENTO RAD |

| Granular Fertilizer Distributor<br>Distributeur D'Engrais Granulé<br>Gekörnter Düngerverteilung<br>Spanditrice Di Concimi Granulare<br>Distribuidora De Abonos Granulado | 100-90 | 12 Rows<br>12 Rangs<br>12 Reihes<br>12 Lineas<br>12 Lineas |
|---|---|---|

5-PM19-013-A

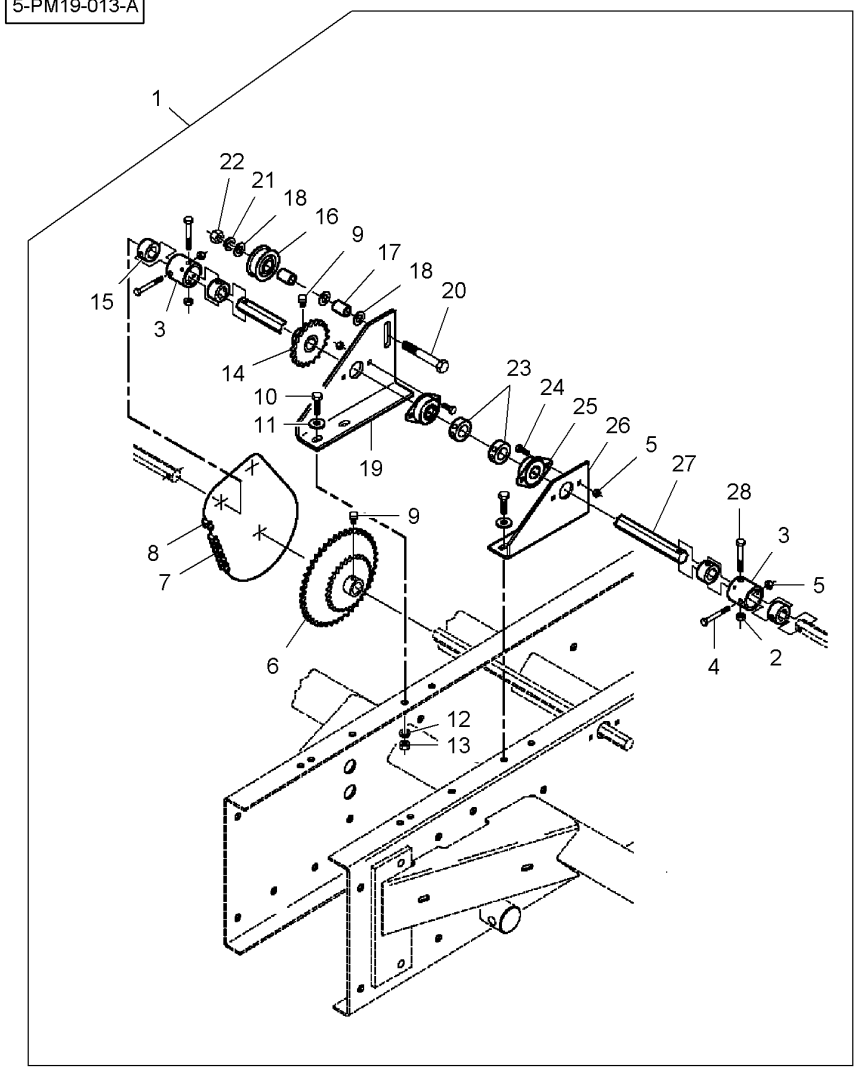


| | | | | | |
|---|---|---|---|---|---|
| 26* | N857576 | 1 ◀ | 1 | BRACKET | SUPPORT FIXATION<br>STAFFETTA<br>HALTEARM<br>SOPORTE |
| 27* | N857577 | 1 | 1 | SHAFT | ARBRE<br>ALBERO<br>WELLE<br>ARBOL |
| 28* | 7771744 | 1 5/16"-18 X 2-1/4 | 2 | BOLT UNC | BOULON UNC<br>BULLONE UNC<br>MASCH.SCHRB.UNC<br>PERNO UNC |

| Spreading Mechanisms<br>Dispositifs D'Epandage<br>Systeme Der Streuwerkzeuge<br>Organi Di Spandimento<br>Dispositivos De Distribucion | 100-95 | Herbicide (14")<br>Herbicide (14")<br>Herbizid (14")<br>Erbicida (14")<br>Herbicida (14") |
|---|---|---|

5-PL45-001-B

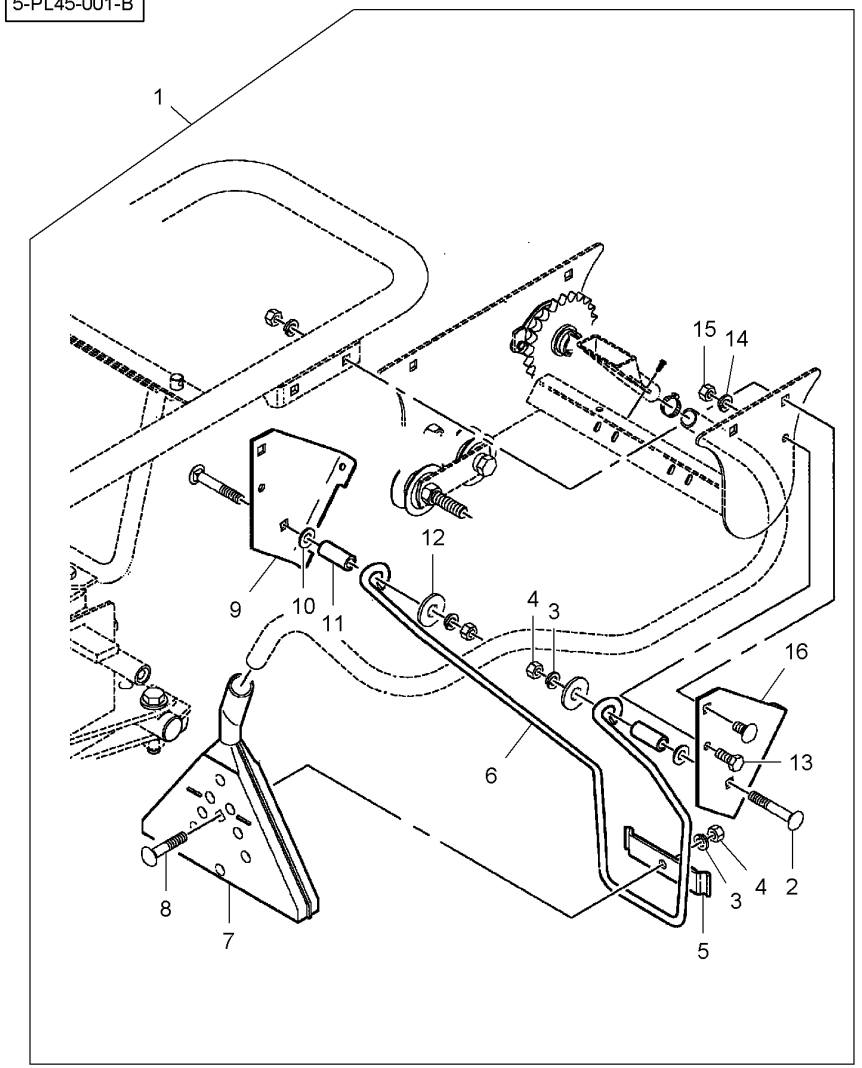


| | | | | | | |
|---|---|---|---|---|---|---|
| 1 | 6000626 | | 1 | KIT, ATTACHMENT | JEU ACCESSOIRES<br>KIT ACCESSORI | SATZ ANBAUTEILE<br>JUEGO ACCESORIO |
| 2* | 7700867 | 1 M10 X 70 | 4 | SCREW | VIS<br>VITE | SCHRAUBE<br>TORNILLO |
| 3* | 700708367 | 1 M10 | 6 | LOCK WASHER | RONDELLE FREIN<br>RONDELLA ARRESTO | SICHERUNGSRING<br>ARANDELA SEGURID |
| 4* | 1440249X1 | 1 M10 | 6 | NUT | ECROU<br>DADO | MUTTER<br>TUERCA |
| 5* | DA22902 | 1 | 2 | BRACKET | SUPPORT FIXATION<br>STAFFETTA | HALTEARM<br>SOPORTE |
| 6* | 852642 | 1 | 2 | ROD | TRINGLE<br>ASTA | STANGE<br>VARILLA |
| 7* | DAA30614 | 1 | 2 | DIFFUSER | DIFFUSEUR<br>DIFFUSORE | DIFFUSOR<br>DIFUSOR |
| 8* | 7700826 | 1 M10 X 50 | 2 | SCREW | VIS<br>VITE | SCHRAUBE<br>TORNILLO |
| 9* | 700158334 | 1 ▶ | 2 | SUPPORT | SUPPORT<br>SOPPORTO | TRAGER<br>SOPORTE |
| 10* | 700717622 | 1 | 4 | WASHER | RONDELLE<br>RONDELLA | SCHEIBE<br>ARANDELA |
| 11* | 852684 | 1 | 4 | SPACER | ENTRETOISE<br>DISTANZIALE | ABSTANDSTUECK<br>DISCO ESPACIADOR |
| 12* | 70918431 | 1 1/2" | 4 | FLAT WASHER | RONDELLE PLATE<br>RONDELLE PIANA | UNTERLEGSCHEIBEN<br>ARANDELA PLANA |
| 13* | 700708358 | 1 M8 X 16 | 2 | CAPSCREW | VIS BOUCHON<br>TAPPO A VITE | HUTSCHRAUBE<br>TORNILLO TAPON |
| 14* | 1177981 | 1 M8 | 2 | SPRING WASHER | RONDELLE ELASTIQ<br>RONDELLA ELASTI. | FEDERSCHEIBE<br>ARANDELA ELASTI. |
| 15* | 1702893 | 1 M8 | 2 | NUT | ECROU<br>DADO | MUTTER<br>TUERCA |
| 16* | 700158333 | 1 ◀ | 2 | SUPPORT | SUPPORT<br>SOPPORTO | TRAGER<br>SOPORTE |

**Spreading Mechanisms**
**Dispositifs D'Epandage**
**Systeme Der Streuwerkzeuge**
**Organi Di Spandimento**
**Dispositivos De Distribucion**

**100-100**

**Granular Herbicide**
**Herbicide En Granulés**
**Herbizidgranulat**
**Erbicida Granulato**
**Herbicida Granulado**

5-PL45-002-B

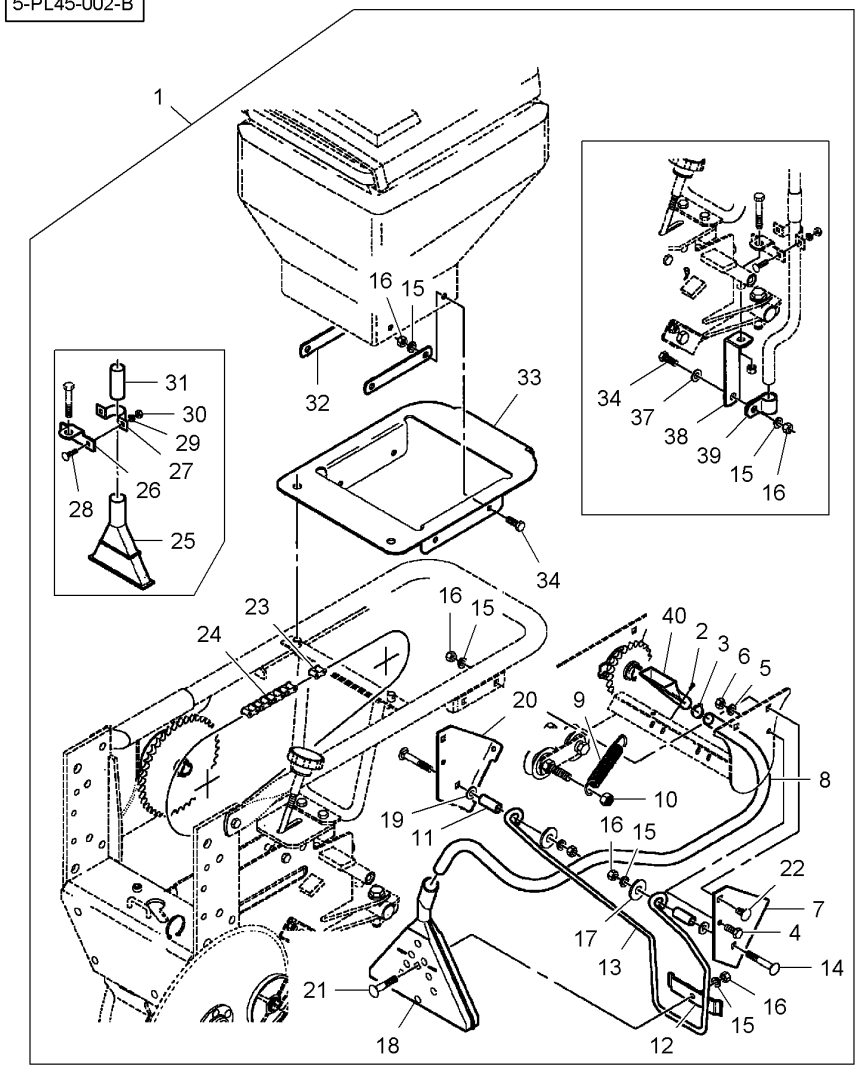


| | | | | | | |
|---|---|---|---|---|---|---|
| 1 | 6000623 | | 100-105 No 1<br>100-110 No 1 | **1** | KIT, ATTACHMENT | JEU ACCESSOIRES<br>KIT ACCESSORI | SATZ ANBAUTEILE<br>JUEGO ACCESORIO |
| 2* | N15180 | 1 | No 10-16 X 1/2 | **4** | SCREW | VIS<br>VITE | SCHRAUBE<br>TORNILLO |
| 3* | 70921910 | 1 | | **2** | HOSE CLIP | COLLIER DURITE<br>COLLARE DI TUBO | SCHLAUCHBINDER<br>ABRAZADERA TUBO |
| 4* | 700708358 | 1 | M8 X 16 | **2** | CAPSCREW | VIS BOUCHON<br>TAPPO A VITE | HUTSCHRAUBE<br>TORNILLO TAPON |
| 5* | 1177981 | 1 | M8 | **2** | SPRING WASHER | RONDELLE ELASTIQ<br>RONDELLA ELASTI. | FEDERSCHEIBE<br>ARANDELA ELASTI. |
| 6* | 1702893 | 1 | M8 | **2** | NUT | ECROU<br>DADO | MUTTER<br>TUERCA |
| 7* | 700158333 | 1 ◀ | | **2** | SUPPORT | SUPPORT<br>SOPPORTO | TRAGER<br>SOPORTE |
| 8* | 852489 | 1 | | **2** | HOSE | DURITE<br>TUBO FLESSIBILE | SCHLAUCH<br>TUBO DE GOMA |
| 9* | **700717154** | 1 | | **2** | SPRING | RESSORT<br>MOLLA | FEDER<br>MUELLE |
| 10* | N858844 | 1 | M12 | **2** | LOCKNUT | ECROU FREIN<br>AUTOBLOCCANTE | SICHERUNGSMUTTER<br>CONTRATUERCA |
| 11* | 852684 | 1 | | **4** | SPACER | ENTRETOISE<br>DISTANZIALE | ABSTANDSTUECK<br>DISCO ESPACIADOR |
| 12* | DA22902 | 1 | | **2** | BRACKET | SUPPORT FIXATION<br>STAFFETTA | HALTEARM<br>SOPORTE |
| 13* | 852642 | 1 | | **2** | ROD | TRINGLE<br>ASTA | STANGE<br>VARILLA |
| 14* | 7700867 | 1 | M10 X 70 | **4** | SCREW | VIS<br>VITE | SCHRAUBE<br>TORNILLO |
| 15* | 700708367 | 1 | M10 | **22** | LOCK WASHER | RONDELLE FREIN<br>RONDELLA ARRESTO | SICHERUNGSRING<br>ARANDELA SEGURID |
| 16* | 1440249X1 | 1 | M10 | **22** | NUT | ECROU<br>DADO | MUTTER<br>TUERCA |
| 17* | 70918431 | 1 | 1/2" | **4** | FLAT WASHER | RONDELLE PLATE<br>RONDELLE PIANA | UNTERLEGSCHEIBEN<br>ARANDELA PLANA |
| 18* | DAA30614 | 1 | | **2** | DIFFUSER | DIFFUSEUR<br>DIFFUSORE | DIFFUSOR<br>DIFUSOR |
| 19 | 700717622 | 1 | | **4** | WASHER | RONDELLE<br>RONDELLA | SCHEIBE<br>ARANDELA |
| 20* | 700158334 | 1 ▶ | | **2** | SUPPORT | SUPPORT<br>SOPPORTO | TRAGER<br>SOPORTE |
| 21* | 7700826 | 1 | M10 X 50 | **2** | SCREW | VIS<br>VITE | SCHRAUBE<br>TORNILLO |
| 22* | 7700545 | 1 | M10 X 20 | **8** | SCREW | VIS<br>VITE | SCHRAUBE<br>TORNILLO |
| 23* | **70915002** | 1 | No 41 R/C | **1** | LINK | MAILLON<br>MAGLIA | GLIED<br>ESLABON |
| 24* | N859055 | 1 | No 41<br>93 Pitches | **2** | ROLL OF CHAIN | ROULEAU CHAINE<br>RULLO PER CATENA | KETTE METERWARE<br>CADENA 5M |
| 25* | DB32601 | 1 | [A] | **2** | DIFFUSER | DIFFUSEUR<br>DIFFUSORE | DIFFUSOR<br>DIFUSOR |
| 26* | N857548 | 1 | [A] | **2** | BRACKET | SUPPORT FIXATION<br>STAFFETTA | HALTEARM<br>SOPORTE |

**Spreading Mechanisms**
**Dispositifs D'Epandage**
**Systeme Der Streuwerkzeuge**
**Organi Di Spandimento**
**Dispositivos De Distribucion**

**100-100**

**Granular Herbicide**
**Herbicide En Granulés**
**Herbizidgranulat**
**Erbicida Granulato**
**Herbicida Granulado**

5-PL45-002-B

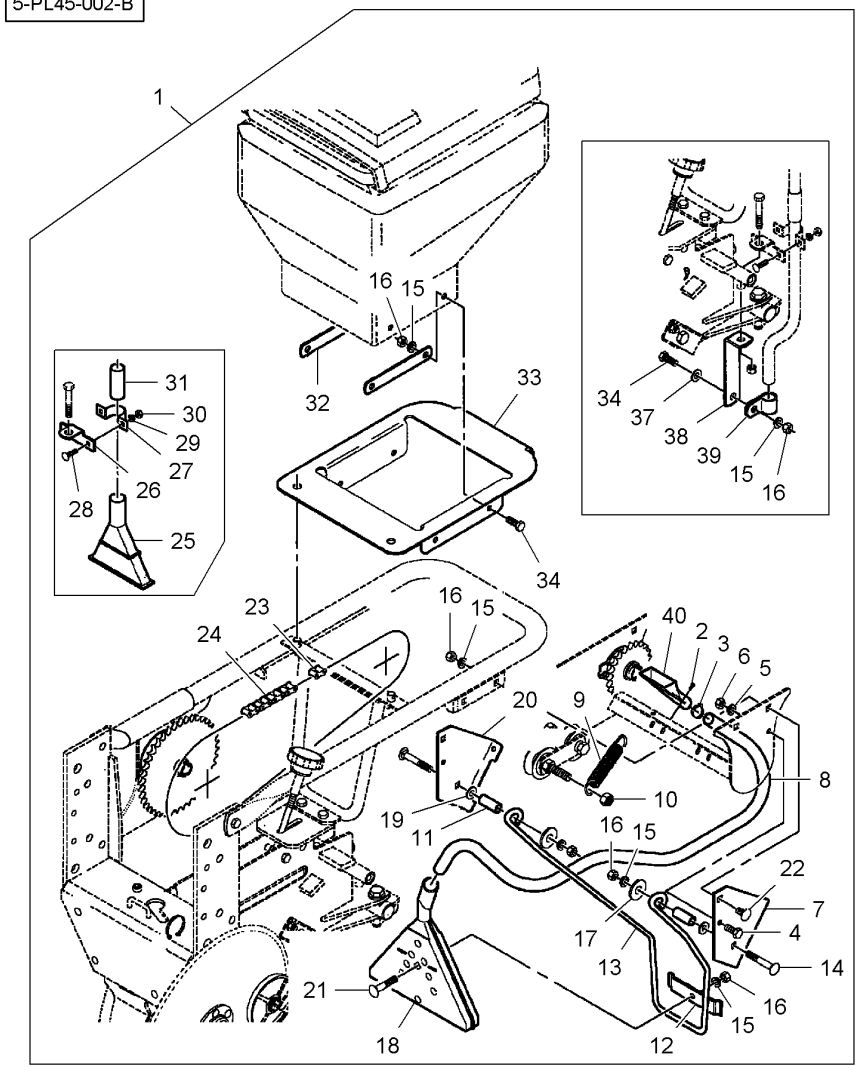


| | | | | | |
|---|---|---|---|---|---|
| 27* | 852008 | 1 [A] | 2 CLAMP | COLLIER<br>FASCETTA | HALTESCHELLE<br>ABRAZADERA |
| 28* | 7702602 | 1 [A]<br>M6 X 25 | 4 SCREW | VIS<br>VITE | SCHRAUBE<br>TORNILLO |
| 29* | Y705269 | 1 [A]<br>M6 | 4 WASHER | RONDELLE<br>RONDELLA | SCHEIBE<br>ARANDELA |
| 30* | 7704703 | 1 [A]<br>M6 | 4 NUT | ECROU<br>DADO | MUTTER<br>TUERCA |
| 31* | 852197 | 1 [A] | 2 CONNECTOR | BORNE.<br>MORSETTO. | DOPPELNIPPEL<br>CONECTOR |
| 32 | 852478 | 1 | 4 STRAP | PATTE<br>CORREGGIA | LASCHE<br>FAJA |
| 33 | N858915 | 1 | 2 BRACKET | SUPPORT FIXATION<br>STAFFETTA | HALTEARM<br>SOPORTE |
| 34* | 700708349 | 1 M10 X 25 | 8 BOLT | BOULON<br>BULLONE | BOLZEN<br>BULON |
| 37* | 70918266 | 1 [B]<br>3/8" | 2 FLAT WASHER | RONDELLE PLATE<br>RONDELLE PIANA | UNTERLEGSCHEIBEN<br>ARANDELA PLANA |
| 38* | 700155154 | 1 [B] | 2 BRACKET | SUPPORT FIXATION<br>STAFFETTA | HALTEARM<br>SOPORTE |
| 39* | 703895 | 1 [B] | 2 CLAMP | COLLIER<br>FASCETTA | HALTESCHELLE<br>ABRAZADERA |
| 40* | DA37497 | 1 | 2 FUNNEL | ENTONNOIR<br>IMBUTO | TRICHTER<br>EMBUDO |

[A] FOR INSECTICIDE USE ONLY
SEULEMENT POUR INSECTICIDE
NUR FÜR INSEKTIZID
SOLTANTO PER INSETTICIDA
SOLAMENTE PARA INSECTICIDA

[B] FOR FURROW CHEMICAL APPLICATION ONLY
SEULEMENT POUR APPLICATION CHIMIQUE
NUR FÜR CHEMISCHE ANWENDUNG
SOLTANTO PER APPLICAZIONE CHIMICA
SOLAMENTE PARA APLICACIÓN QUÍMICA

**Spreading Mechanisms**
**Dispositifs D'Epandage**
**Systeme Der Streuwerkzeuge**
**Organi Di Spandimento**
**Dispositivos De Distribucion**

**100-105**

**Granular Herbicide**
**Herbicide En Granulés**
**Herbizidgranulat**
**Erbicida Granulato**
**Herbicida Granulado**

5-PL45-003-B

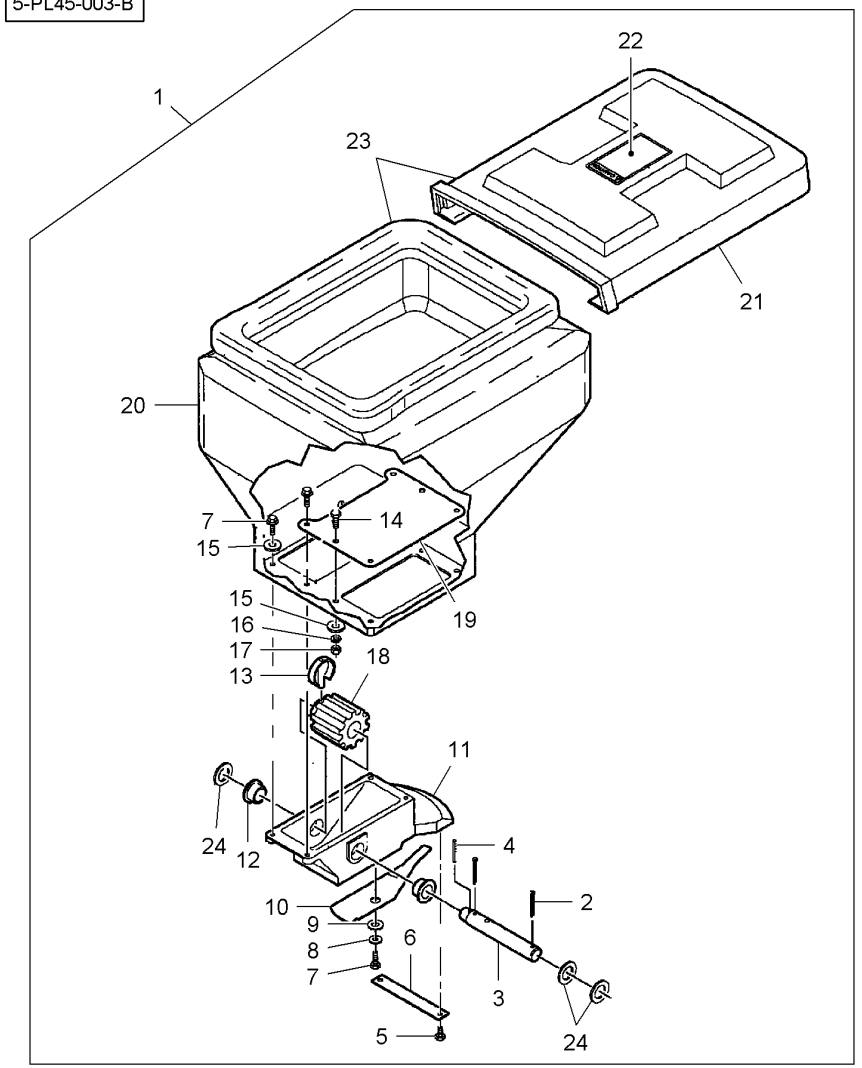


| | | | | | | |
|---|---|---|---|---|---|---|
| 1 | 6000623 | 100-100 No 1<br>100-110 No 1 | **1** | KIT, ATTACHMENT | JEU ACCESSOIRES<br>KIT ACCESSORI | SATZ ANBAUTEILE<br>JUEGO ACCESORIO |
| 2* | 62190 | 1 5/32" X 1-1/2 | **4** | PIN | GOUPILLE<br>COPPIGLIA | STIFT<br>PASADOR |
| 3* | 852076 | 1 | **2** | SHAFT | ARBRE<br>ALBERO | WELLE<br>ARBOL |
| 4* | **70915946** | 1 5/32" X 1-1/4 | **2** | ROLL PIN | GOUPILLE ROULEE<br>SPINA ELASTICA | SPANNHUELSE<br>PASADOR ELASTICO |
| 5* | 853792 | 1 No 10 X 3/8 | **4** | SCREW | VIS<br>VITE | SCHRAUBE<br>TORNILLO |
| 6* | DA26006 | 1 | **2** | SUPPORT | SUPPORT<br>SOPPORTO | TRAGER<br>SOPORTE |
| 7* | 701565 | 1 1/4"-20 X 3/4 | **10** | SCREW | VIS<br>VITE | SCHRAUBE<br>TORNILLO |
| 8* | 70918264 | 1 1/4" | **2** | WASHER | RONDELLE<br>RONDELLA | SCHEIBE<br>ARANDELA |
| 9* | DB13845 | 1 | **2** | SPRING WASHER | RONDELLE ELASTIQ<br>RONDELLA ELASTI. | FEDERSCHEIBE<br>ARANDELA ELASTI. |
| 10* | DA33403 | 1 | **2** | PLATE | PLAQUE<br>PIASTRA | PLATTE<br>PLATO |
| 11* | 852975 | 1 | **2** | HOUSING | CARTER<br>CARCASSA | GEHAEUSE<br>ALOJAMIENTO |
| 12* | DA25845 | 1 | **4** | BEARING | COUSSINET<br>CUSCINETTO | LAGER<br>COJINETE |
| 13* | DAB12703 | 1 | **2** | PIN | GOUPILLE<br>COPPIGLIA | STIFT<br>PASADOR |
| 14* | 7703457 | 1 1/4"-20 X 3/4 | **8** | BOLT UNC | BOULON UNC<br>BULLONE UNC | MASCH.SCHRB.UNC<br>PERNO UNC |
| 15* | 700717665 | 1 | **12** | WASHER | RONDELLE<br>RONDELLA | SCHEIBE<br>ARANDELA |
| 16* | 705012 | 1 1/4" | **8** | LOCK WASHER | RONDELLE FREIN<br>RONDELLA ARRESTO | SICHERUNGSRING<br>ARANDELA SEGURID |
| 17* | 70916622 | 1 1/4"-20 | **8** | NUT UNC | ECROU UNC<br>DADO UNC | MUTTER UNC<br>TUERCA UNC |
| 18* | DAA22977 | 1 | **2** | WHEEL | ROUE<br>RUOTA | RAD<br>RUEDA |
| 19* | 852479 | 1 | **2** | PLATE | PLAQUE<br>PIASTRA | PLATTE<br>PLATO |
| 20* | N858927 | 23 | **1** | HOPPER | TREMIE<br>TRAMOGGIA | KORNTANK<br>TOLVA |
| 21* | 853108 | 23 | **1** | LID | PLAQUE COUVERCLE<br>COPERTA | ABDECKPLATTE<br>COBERTURA |
| 22* | 852652 | 1 | **2** | DECAL | DECALCOMANIE<br>DECALCOMANIA | AUFKLEBER<br>CALCOMANIA |
| 23* | N858969 | 1 | **2** | HOPPER | TREMIE<br>TRAMOGGIA | KORNTANK<br>TOLVA |
| 24* | 700717668 | 1 | **6** | WASHER | RONDELLE<br>RONDELLA | SCHEIBE<br>ARANDELA |

**Spreading Mechanisms**
**Dispositifs D'Epandage**
**Systeme Der Streuwerkzeuge**
**Organi Di Spandimento**
**Dispositivos De Distribucion**

# 100-110

**Granular Herbicide**
**Herbicide En Granulés**
**Herbizidgranulat**
**Erbicida Granulato**
**Herbicida Granulado**

5-PL45-004-B

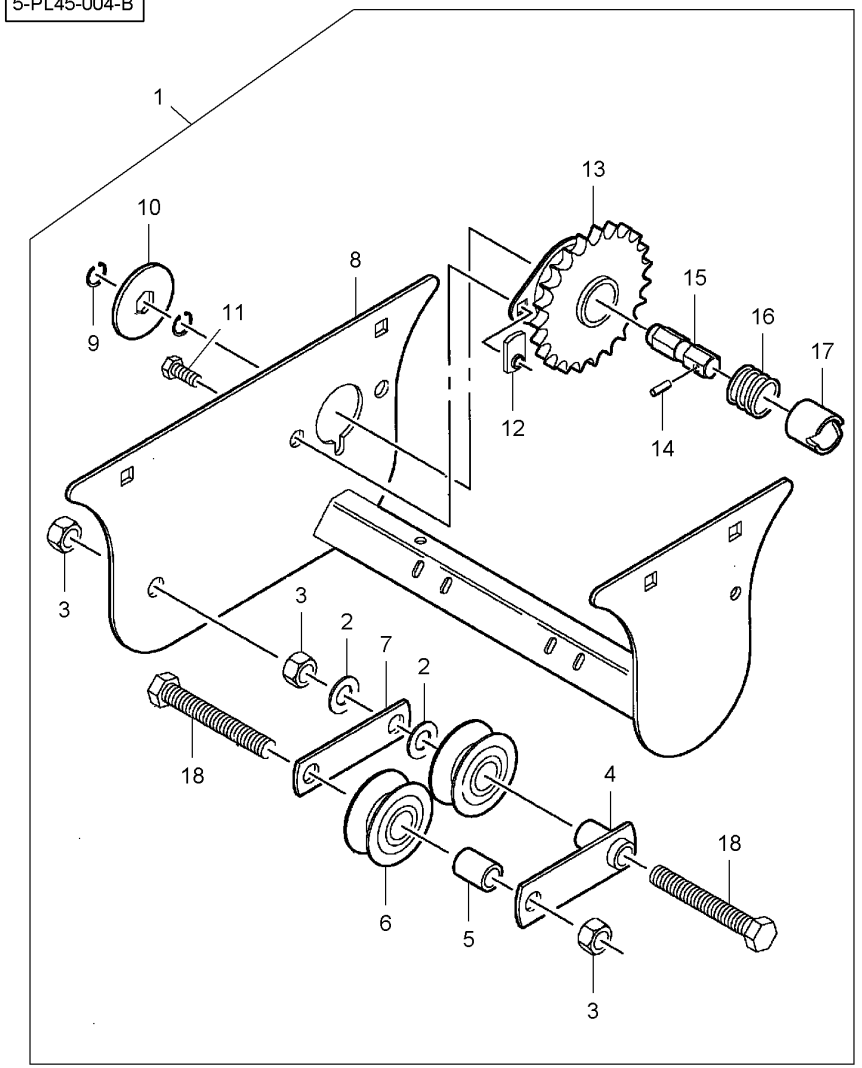


| | | | | | | |
|---|---|---|---|---|---|---|
| 1 | 6000623 | | 100-100 No 1<br>100-105 No 1 | **1** | KIT, ATTACHMENT | JEU ACCESSOIRES<br>KIT ACCESSORI | SATZ ANBAUTEILE<br>JUEGO ACCESORIO |
| 2* | 10491 | 1 | | **4** | WASHER | RONDELLE<br>RONDELLA | SCHEIBE<br>ARANDELA |
| 3* | N858844 | 1 | M12 | **4** | LOCKNUT | ECROU FREIN<br>AUTOBLOCCANTE | SICHERUNGSMUTTER<br>CONTRATUERCA |
| 4* | 852073 | 1 | | **2** | TIGHTENER | TENSEUR<br>TENDITORE* | SPANNROLLE<br>TENSADOR |
| 5* | WSP1344 | 1 | | **2** | SPACER | ENTRETOISE<br>DISTANZIALE | ABSTANDSTUECK<br>DISCO ESPACIADOR |
| 6* | **853932** | 1 | | **4** | ROLLER | GALET<br>ROTELLA | ROLLE<br>RODILLO |
| 7* | **W246431B** | 1 | | **2** | STRAP | PATTE<br>CORREGGIA | LASCHE<br>FAJA |
| 8* | 700163860P | 1 | | **2** | FRAME | BATI<br>TELAIO | RAHMEN<br>BASTIDOR |
| 9* | W944128-4 | 1 | | **4** | RING | ANNEAU<br>ANELLO | RING.<br>ANILLO |
| 10* | 855034 | 1 | | **2** | RING | ANNEAU<br>ANELLO | RING.<br>ANILLO |
| 11* | 700725326 | 1 | M8 X 16 | **4** | SCREW | VIS<br>VITE | SCHRAUBE<br>TORNILLO |
| 12* | N858774 | 1 | M8 | **4** | NUT | ECROU<br>DADO | MUTTER<br>TUERCA |
| 13* | 852036 | 1 | | **2** | COG | ROUE DENTEE<br>INCASTRO | SCHALTZAHN<br>DIENTE DE RUEDA |
| 14* | 70915711 | 1 | 3/16" X 7/8 | **2** | ROLL PIN | GOUPILLE ROULEE<br>SPINA ELASTICA | SPANNHUELSE<br>PASADOR ELASTICO |
| 15* | N856073 | 1 | | **2** | SHAFT | ARBRE<br>ALBERO | WELLE<br>ARBOL |
| 16* | 852083 | 1 | | **2** | COMP.SPRING | RESSORT DE COMPR<br>MOLLA COMPOSTA | DRUCKFEDER<br>RESORTE DE COMP. |
| 17* | 853845 | 1 | | **2** | BUSH | BAGUE<br>BOCCOLA | RING<br>CASQUILLO |
| 18* | 8701229 | 1 | M12 X 80 | **4** | CAPSCREW | VIS BOUCHON<br>TAPPO A VITE | HUTSCHRAUBE<br>TORNILLO TAPON |

**Spreading Mechanisms**
**Dispositifs D'Epandage**
**Systeme Der Streuwerkzeuge**
**Organi Di Spandimento**
**Dispositivos De Distribucion**

# 100-115

**Granular Insecticide**
**Insecticide En Granulés**
**Insektizidgranulat**
**Insecticida Granulato**
**Insecticida Granulado**

5-PL45-005-B

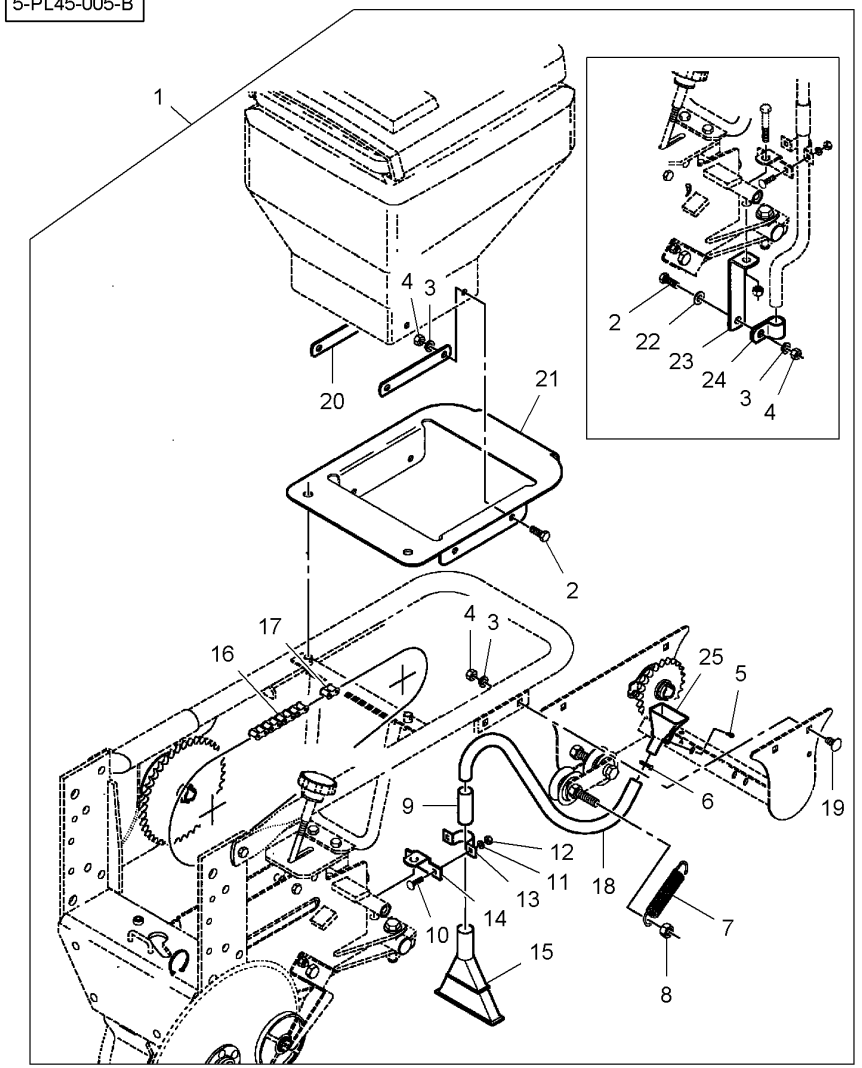


| | | | | | | | |
|---|---|---|---|---|---|---|---|
| 1 | 6000624 | | 100-125 No 1<br>100-130 No 1 | **1** | KIT, ATTACHMENT | JEU ACCESSOIRES<br>KIT ACCESSORI | SATZ ANBAUTEILE<br>JUEGO ACCESORIO |
| 2 | 700708349 | 1 | M10 X 25 | **10** | BOLT | BOULON<br>BULLONE | BOLZEN<br>BULON |
| 3 | 700708367 | 1 | M10 | **18** | LOCK WASHER | RONDELLE FREIN<br>RONDELLA ARRESTO | SICHERUNGSRING<br>ARANDELA SEGURID |
| 4* | 1440249X1 | 1 | M10 | **18** | NUT | ECROU<br>DADO | MUTTER<br>TUERCA |
| 5 | 15180 | 1 | No 10-16 X 1/2 | **4** | SCREW | VIS<br>VITE | SCHRAUBE<br>TORNILLO |
| 6 | 70921910 | 1 | | **2** | HOSE CLIP | COLLIER DURITE<br>COLLARE DI TUBO | SCHLAUCHBINDER<br>ABRAZADERA TUBO |
| 7 | **700717154** | 1 | | **2** | SPRING | RESSORT<br>MOLLA | FEDER<br>MUELLE |
| 8 | N858844 | 1 | M12 | **2** | LOCKNUT | ECROU FREIN<br>AUTOBLOCCANTE | SICHERUNGSMUTTER<br>CONTRATUERCA |
| 9 | 852197 | 1 | | **2** | CONNECTOR | BORNE.<br>MORSETTO. | DOPPELNIPPEL<br>CONECTOR |
| 10 | 7702602 | 1 | M6 X 25 | **4** | SCREW | VIS<br>VITE | SCHRAUBE<br>TORNILLO |
| 11 | Y705269 | 1 | M6 | **4** | WASHER | RONDELLE<br>RONDELLA | SCHEIBE<br>ARANDELA |
| 12 | 7704703 | 1 | M6 | **4** | NUT | ECROU<br>DADO | MUTTER<br>TUERCA |
| 13 | 852008 | 1 | | **2** | CLAMP | COLLIER<br>FASCETTA | HALTESCHELLE<br>ABRAZADERA |
| 14 | N857548 | 1 | | **2** | BRACKET | SUPPORT FIXATION<br>STAFFETTA | HALTEARM<br>SOPORTE |
| 15 | DB32601 | 1 | | **2** | DIFFUSER | DIFFUSEUR<br>DIFFUSORE | DIFFUSOR<br>DIFUSOR |
| 16 | N859055 | 1 | No 41<br>93 Pitches | **2** | ROLL OF CHAIN | ROULEAU CHAINE<br>RULLO PER CATENA | KETTE METERWARE<br>CADENA 5M |
| 17* | **70915002** | 1 | No 41 R/C | **1** | LINK | MAILLON<br>MAGLIA | GLIED<br>ESLABON |
| 18* | 852489 | 1 | | **2** | HOSE | DURITE<br>TUBO FLESSIBILE | SCHLAUCH<br>TUBO DE GOMA |
| 19* | 7700545 | 1 | M10 X 20 | **8** | SCREW | VIS<br>VITE | SCHRAUBE<br>TORNILLO |
| 20* | 852478 | 1 | | **4** | STRAP | PATTE<br>CORREGGIA | LASCHE<br>FAJA |
| 21* | N858915 | 1 | | **2** | BRACKET | SUPPORT FIXATION<br>STAFFETTA | HALTEARM<br>SOPORTE |
| 22* | 70918266 | 1 | [A]<br>3/8" | **2** | FLAT WASHER | RONDELLE PLATE<br>RONDELLE PIANA | UNTERLEGSCHEIBEN<br>ARANDELA PLANA |
| 23* | 700155154 | 1 | [A] | **2** | BRACKET | SUPPORT FIXATION<br>STAFFETTA | HALTEARM<br>SOPORTE |
| 24* | 703895 | 1 | [A] | **2** | CLAMP | COLLIER<br>FASCETTA | HALTESCHELLE<br>ABRAZADERA |
| 25* | DA37497 | 1 | | **2** | FUNNEL | ENTONNOIR<br>IMBUTO | TRICHTER<br>EMBUDO |

| Spreading Mechanisms<br>Dispositifs D'Epandage<br>Systeme Der Streuwerkzeuge<br>Organi Di Spandimento<br>Dispositivos De Distribucion | 100-115 | Granular Insecticide<br>Insecticide En Granulés<br>Insektizidgranulat<br>Insecticida Granulato<br>Insecticida Granulado |
|---|---|---|

5-PL45-005-B

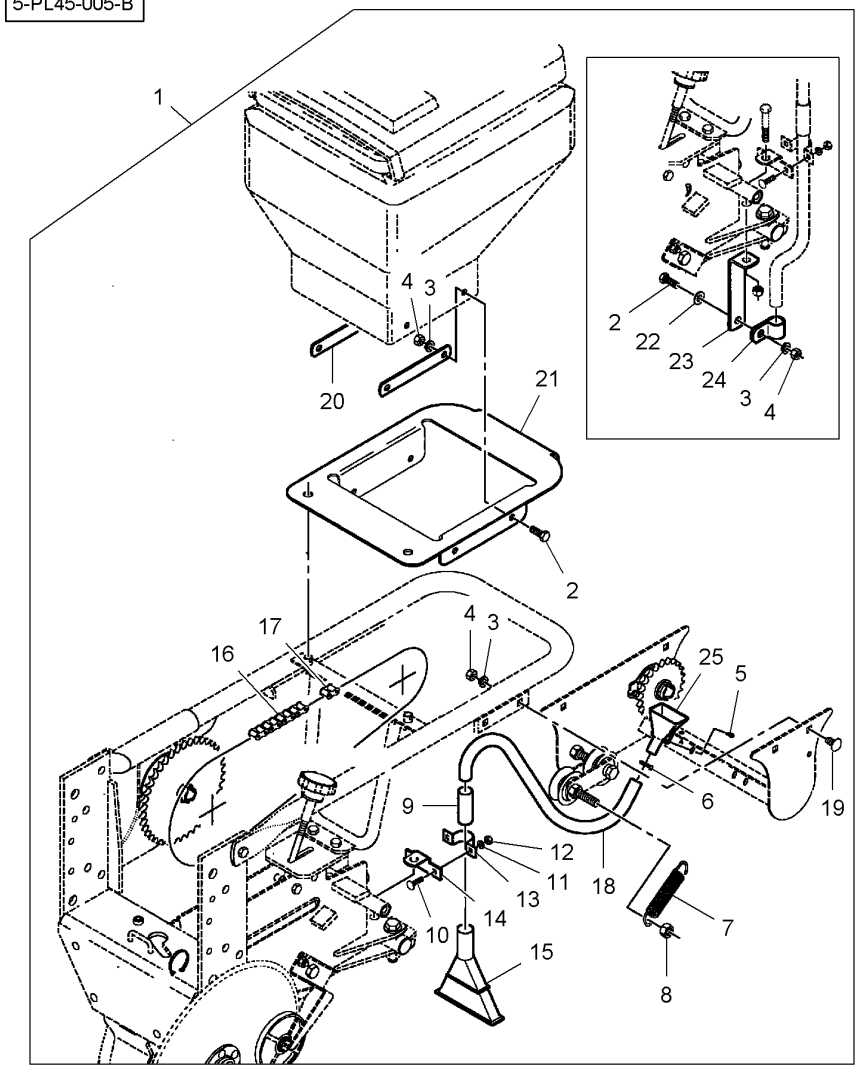


[A] FOR FURROW CHEMICAL APPLICATION ONLY
SEULEMENT POUR APPLICATION CHIMIQUE
NUR FÜR CHEMISCHE ANWENDUNG
SOLTANTO PER APPLICAZIONE CHIMICA
SOLAMENTE PARA APLICACIÓN QUÍMICA

**Spreading Mechanisms**
**Dispositifs D'Epandage**
**Systeme Der Streuwerkzeuge**
**Organi Di Spandimento**
**Dispositivos De Distribucion**

# 100-120

**Granular Insecticide**
**Insecticide En Granulés**
**Insektizidgranulat**
**Insecticida Granulato**
**Insecticida Granulado**

5-PL45-012-A

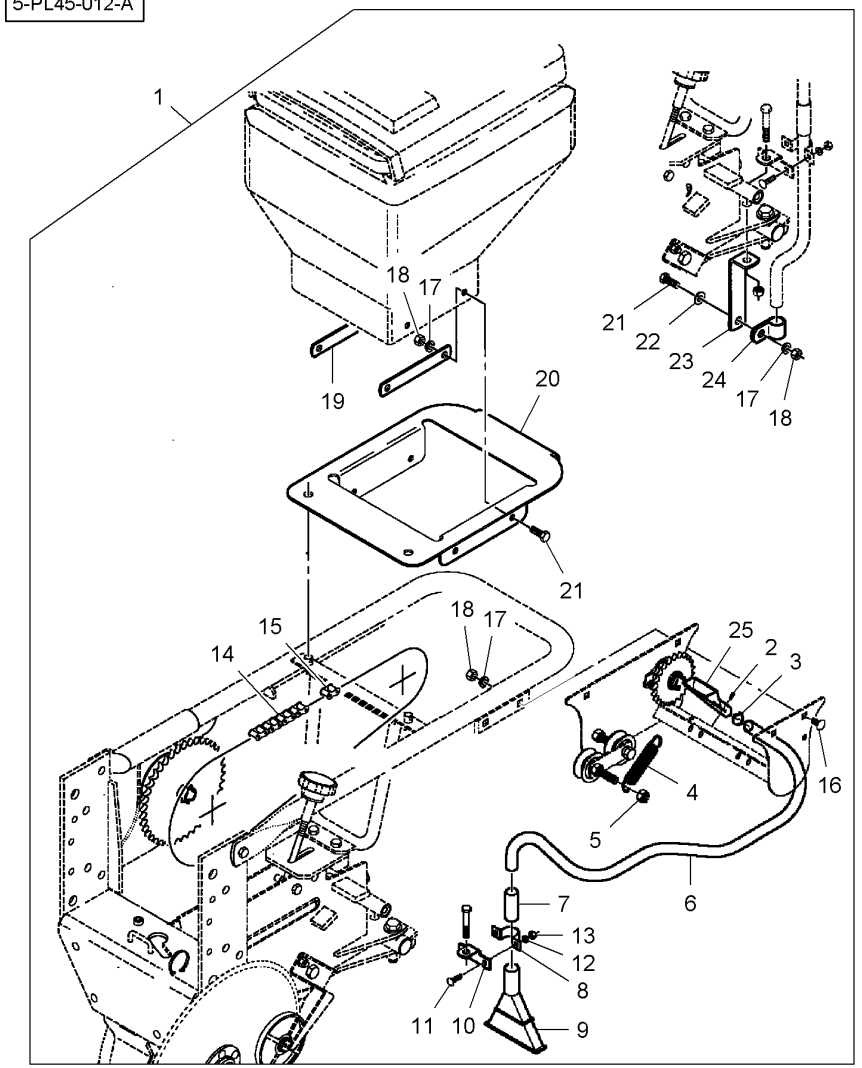


| | | | | | | |
|---|---|---|---|---|---|---|
| 1* | 6000759 | | 100-125 No 1<br>100-130 No 1 | **1** | KIT, ATTACHMENT | JEU ACCESSOIRES<br>KIT ACCESSORI | SATZ ANBAUTEILE<br>JUEGO ACCESORIO |
| 2* | 15180 | 1 | No 10-16 X 1/2 | **8** | SCREW | VIS<br>VITE | SCHRAUBE<br>TORNILLO |
| 3* | 7741119 | 1 | | **2** | HOSE CLIP | COLLIER DURITE<br>COLLARE DI TUBO | SCHLAUCHBINDER<br>ABRAZADERA TUBO |
| 4* | **700717154** | 1 | | **2** | SPRING | RESSORT<br>MOLLA | FEDER<br>MUELLE |
| 5* | N858844 | 1 | M12 | **2** | LOCKNUT | ECROU FREIN<br>AUTOBLOCCANTE | SICHERUNGSMUTTER<br>CONTRATUERCA |
| 6* | 852489 | 1 | | **2** | HOSE | DURITE<br>TUBO FLESSIBILE | SCHLAUCH<br>TUBO DE GOMA |
| 7* | 852197 | 1 | | **2** | CONNECTOR | BORNE.<br>MORSETTO. | DOPPELNIPPEL<br>CONECTOR |
| 8* | 852008 | 1 | | **2** | CLAMP | COLLIER<br>FASCETTA | HALTESCHELLE<br>ABRAZADERA |
| 9* | DB32601 | 1 | | **2** | DIFFUSER | DIFFUSEUR<br>DIFFUSORE | DIFFUSOR<br>DIFUSOR |
| 10* | N857548 | 1 | | **2** | BRACKET | SUPPORT FIXATION<br>STAFFETTA | HALTEARM<br>SOPORTE |
| 11* | 7702602 | 1 | M6 X 25 | **4** | SCREW | VIS<br>VITE | SCHRAUBE<br>TORNILLO |
| 12* | 705269 | 1 | M6 | **4** | SPRING WASHER | RONDELLE ELASTIQ<br>RONDELLA ELASTI. | FEDERSCHEIBE<br>ARANDELA ELASTI. |
| 13* | 7704703 | 1 | M6 | **4** | NUT | ECROU<br>DADO | MUTTER<br>TUERCA |
| 14* | N859055 | 1 | No 41<br>(93 Pitches) | **2** | ROLL OF CHAIN | ROULEAU CHAINE<br>RULLO PER CATENA | KETTE METERWARE<br>CADENA 5M |
| 14* | 700704017 | 1 | No 41<br>(10 Foot Bulk) | **1** | ROLL OF CHAIN | ROULEAU CHAINE<br>RULLO PER CATENA | KETTE METERWARE<br>CADENA 5M |
| 15* | 12254 | 1 | No 41 R/C | **1** | CHAIN LINK | MAILLON CHAINE<br>MAGLIA OI CONNES | KETTENGLIED<br>ESLABON D CADENA |
| 16* | 7700545 | 1 | M10 X 20 | **8** | SCREW | VIS<br>VITE | SCHRAUBE<br>TORNILLO |
| 17* | 700708367 | 1 | M10 | **18** | LOCK WASHER | RONDELLE FREIN<br>RONDELLA ARRESTO | SICHERUNGSRING<br>ARANDELA SEGURID |
| 18* | 7704398 | 1 | M10 | **18** | NUT | ECROU<br>DADO | MUTTER<br>TUERCA |
| 19* | 852478 | 1 | | **4** | STRAP | PATTE<br>CORREGGIA | LASCHE<br>FAJA |
| 20* | N858915 | 1 | | **2** | BRACKET | SUPPORT FIXATION<br>STAFFETTA | HALTEARM<br>SOPORTE |
| 21* | 700708349 | 1 | M10 X 25 | **10** | BOLT | BOULON<br>BULLONE | BOLZEN<br>BULON |
| 22* | 705657 | 1 | 3/8" | **2** | WASHER | RONDELLE<br>RONDELLA | SCHEIBE<br>ARANDELA |
| 23* | 700155154 | 1 | | **2** | BRACKET | SUPPORT FIXATION<br>STAFFETTA | HALTEARM<br>SOPORTE |
| 24* | 703895 | 1 | | **2** | CLAMP | COLLIER<br>FASCETTA | HALTESCHELLE<br>ABRAZADERA |
| 25* | DA37497 | 1 | | **2** | FUNNEL | ENTONNOIR<br>IMBUTO | TRICHTER<br>EMBUDO |

**Spreading Mechanisms**
**Dispositifs D'Epandage**
**Systeme Der Streuwerkzeuge**
**Organi Di Spandimento**
**Dispositivos De Distribucion**

# 100-125

**Granular Insecticide**
**Insecticide En Granulés**
**Insektizidgranulat**
**Insecticida Granulato**
**Insecticida Granulado**

5-PL45-006-B

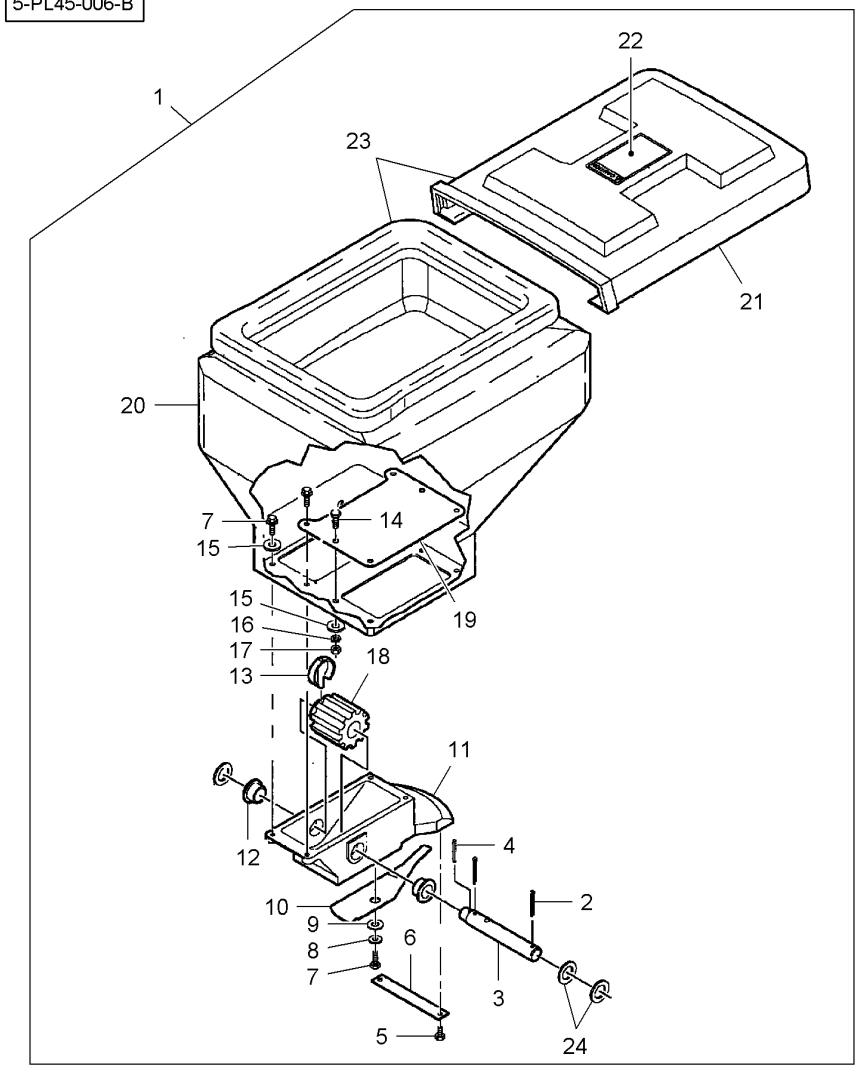


| | | | | | | |
|---|---|---|---|---|---|---|
| 1 | 6000624 | | 100-115 No 1<br>100-130 No 1 | 1 | KIT, ATTACHMENT | JEU ACCESSOIRES<br>KIT ACCESSORI | SATZ ANBAUTEILE<br>JUEGO ACCESORIO |
| 1* | 6000759 | | 100-120 No 1<br>100-130 No 1 | 1 | KIT, ATTACHMENT | JEU ACCESSOIRES<br>KIT ACCESSORI | SATZ ANBAUTEILE<br>JUEGO ACCESORIO |
| 2* | 62190 | 1 | 5/32" X 1-1/2 | 4 | PIN | GOUPILLE<br>COPPIGLIA | STIFT<br>PASADOR |
| 3* | 852076 | 1 | | 2 | SHAFT | ARBRE<br>ALBERO | WELLE<br>ARBOL |
| 4* | W933173 | 1 | 5/32" X 1-1/4 | 2 | ROLL PIN | GOUPILLE ROULEE<br>SPINA ELASTICA | SPANNHUELSE<br>PASADOR ELASTICO |
| 5* | 853792 | 1 | No 10 X 3/8 | 4 | SCREW | VIS<br>VITE | SCHRAUBE<br>TORNILLO |
| 6* | DA26006 | 1 | | 2 | SUPPORT | SUPPORT<br>SOPPORTO | TRAGER<br>SOPORTE |
| 7* | 701565 | 1 | 1/4"-20 X 3/4 | 10 | SCREW | VIS<br>VITE | SCHRAUBE<br>TORNILLO |
| 8* | 705707 | 1 | 1/4" | 2 | WASHER | RONDELLE<br>RONDELLA | SCHEIBE<br>ARANDELA |
| 9* | DB13845 | 1 | | 2 | SPRING WASHER | RONDELLE ELASTIQ<br>RONDELLA ELASTI. | FEDERSCHEIBE<br>ARANDELA ELASTI. |
| 10* | DA33403 | 1 | | 2 | PLATE | PLAQUE<br>PIASTRA | PLATTE<br>PLATO |
| 11* | 852975 | 1 | [A] | 2 | HOUSING | CARTER<br>CARCASSA | GEHAEUSE<br>ALOJAMIENTO |
| 11* | DA36199 | 1 | [B] | | HOUSING | CARTER<br>CARCASSA | GEHAEUSE<br>ALOJAMIENTO |
| 12* | DA25845 | 1 | | 4 | BEARING | COUSSINET<br>CUSCINETTO | LAGER<br>COJINETE |
| 13* | DAB12703 | 1 | | 2 | PIN | GOUPILLE<br>COPPIGLIA | STIFT<br>PASADOR |
| 14* | 7703457 | 1 | 1/4"-20 X 3/4 | 8 | BOLT UNC | BOULON UNC<br>BULLONE UNC | MASCH.SCHRB.UNC<br>PERNO UNC |
| 15* | 700717665 | 1 | | 12 | WASHER | RONDELLE<br>RONDELLA | SCHEIBE<br>ARANDELA |
| 16* | 705012 | 1 | 1/4" | 8 | LOCK WASHER | RONDELLE FREIN<br>RONDELLA ARRESTO | SICHERUNGSRING<br>ARANDELA SEGURID |
| 17* | 704007 | 1 | 1/4"-20 | 8 | NUT UNC | ECROU UNC<br>DADO UNC | MUTTER UNC<br>TUERCA UNC |
| 18* | DAA22977 | 1 | | 2 | WHEEL | ROUE<br>RUOTA | RAD<br>RUEDA |
| 19* | 852479 | 1 | | 2 | PLATE | PLAQUE<br>PIASTRA | PLATTE<br>PLATO |
| 20* | N858927 | 23 | | 1 | HOPPER | TREMIE<br>TRAMOGGIA | KORNTANK<br>TOLVA |
| 21* | 853108 | 23 | | 1 | LID | PLAQUE COUVERCLE<br>COPERTA | ABDECKPLATTE<br>COBERTURA |
| 22* | 852652 | 1 | | 2 | DECAL | DECALCOMANIE<br>DECALCOMANIA | AUFKLEBER<br>CALCOMANIA |
| 23* | N858969 | 1 | | 2 | HOPPER | TREMIE<br>TRAMOGGIA | KORNTANK<br>TOLVA |
| 24* | 700717668 | 1 | | 6 | WASHER | RONDELLE<br>RONDELLA | SCHEIBE<br>ARANDELA |

| Spreading Mechanisms<br>Dispositifs D'Epandage<br>Systeme Der Streuwerkzeuge<br>Organi Di Spandimento<br>Dispositivos De Distribucion | 100-125 | Granular Insecticide<br>Insecticide En Granulés<br>Insektizidgranulat<br>Insecticida Granulato<br>Insecticida Granulado |
|---|---|---|

5-PL45-006-B

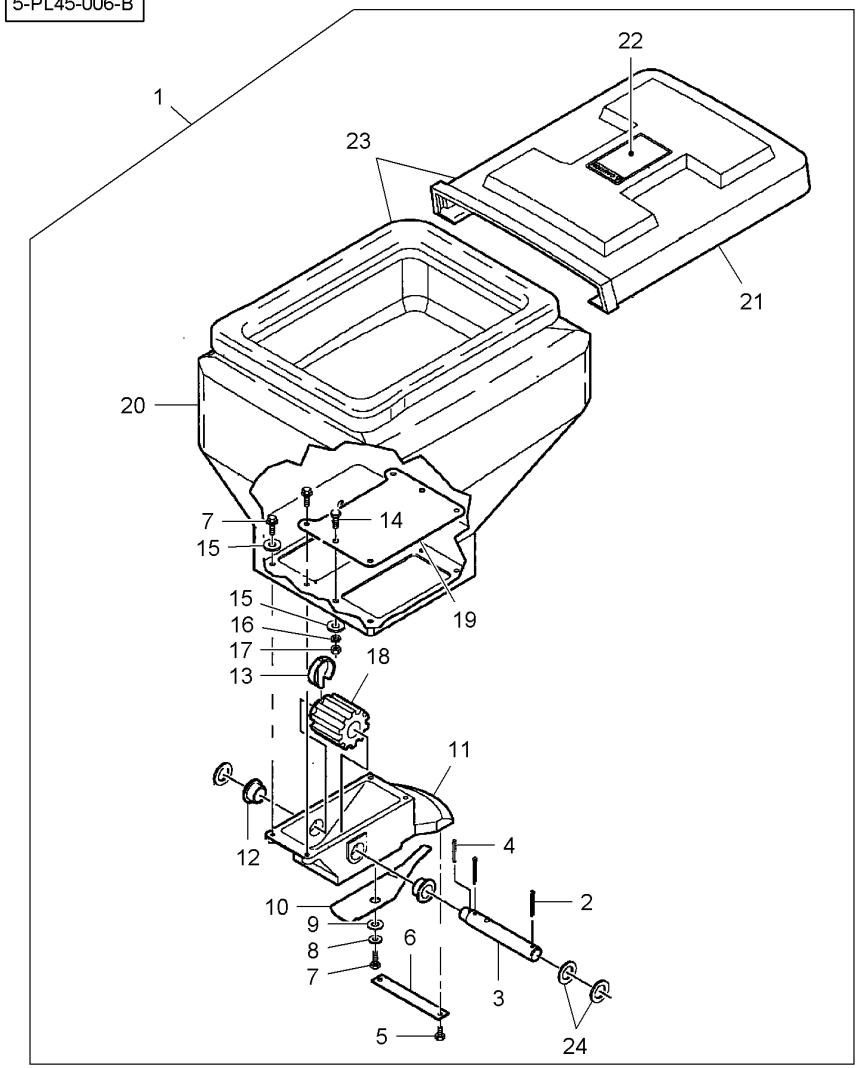


[A] INCLUDED IN 6000624
COMPRIS DANS 6000624
IN 6000624
INCLUSO IN 6000624
INCLUIDO EN 6000624

[B] INCLUDED IN 6000759
COMPRIS DANS 6000759
IN 6000759
INCLUSO IN 6000759
INCLUIDO EN 6000759

**Spreading Mechanisms**
**Dispositifs D'Epandage**
**Systeme Der Streuwerkzeuge**
**Organi Di Spandimento**
**Dispositivos De Distribucion**

**100-130**

**Granular Insecticide**
**Insecticide En Granulés**
**Insektizidgranulat**
**Insecticida Granulato**
**Insecticida Granulado**

5-PL45-011-A

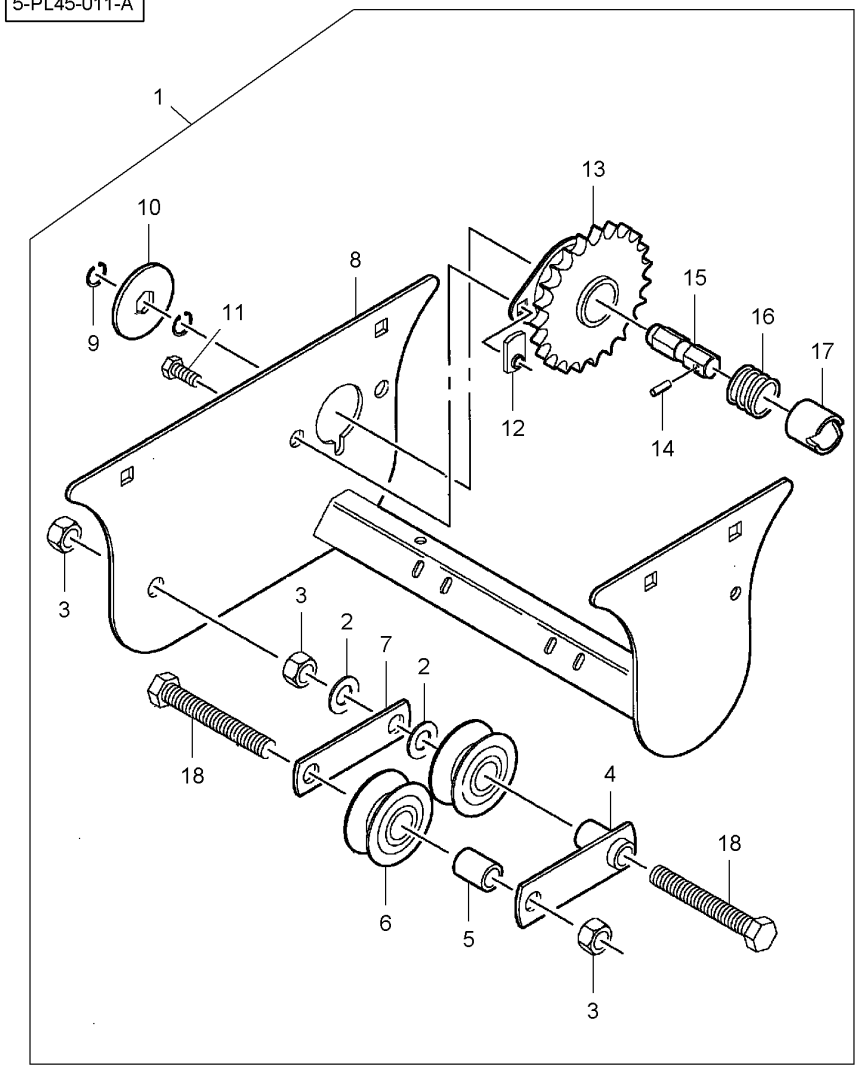


| | | | | | | |
|---|---|---|---|---|---|---|
| 1* | 6000624 | | 100-115 No 1<br>100-125 No 1 | 1 | KIT, ATTACHMENT | JEU ACCESSOIRES<br>KIT ACCESSORI | SATZ ANBAUTEILE<br>JUEGO ACCESORIO |
| 1* | 6000759 | | 100-120 No 1<br>100-125 No 1 | 1 | KIT, ATTACHMENT | JEU ACCESSOIRES<br>KIT ACCESSORI | SATZ ANBAUTEILE<br>JUEGO ACCESORIO |
| 2* | 10491 | 1 | | 4 | WASHER | RONDELLE<br>RONDELLA | SCHEIBE<br>ARANDELA |
| 3* | N858844 | 1 | M12 | 4 | LOCKNUT | ECROU FREIN<br>AUTOBLOCCANTE | SICHERUNGSMUTTER<br>CONTRATUERCA |
| 4* | 852073 | 1 | [A] | 2 | TIGHTENER | TENSEUR<br>TENDITORE* | SPANNROLLE<br>TENSADOR |
| 4* | 700164021 | 1 | [B] | 2 | TIGHTENER | TENSEUR<br>TENDITORE* | SPANNROLLE<br>TENSADOR |
| 5* | WSP1344 | 1 | | 2 | SPACER | ENTRETOISE<br>DISTANZIALE | ABSTANDSTUECK<br>DISCO ESPACIADOR |
| 6* | **853932** | 1 | | 4 | ROLLER | GALET<br>ROTELLA | ROLLE<br>RODILLO |
| 7* | **W246431B** | 1 | | 2 | STRAP | PATTE<br>CORREGGIA | LASCHE<br>FAJA |
| 8* | 700163860P | 1 | | 2 | FRAME | BATI<br>TELAIO | RAHMEN<br>BASTIDOR |
| 9* | W944128-4 | 1 | | 4 | RING | ANNEAU<br>ANELLO | RING.<br>ANILLO |
| 10* | 855034 | 1 | | 2 | RING | ANNEAU<br>ANELLO | RING.<br>ANILLO |
| 11* | 700725326 | 1 | M8 X 16 | 4 | SCREW | VIS<br>VITE | SCHRAUBE<br>TORNILLO |
| 12* | N858774 | 1 | M8 | 4 | NUT | ECROU<br>DADO | MUTTER<br>TUERCA |
| 13* | 852036 | 1 | | 2 | COG | ROUE DENTEE<br>INCASTRO | SCHALTZAHN<br>DIENTE DE RUEDA |
| 14* | W933186 | 1 | 3/16" X 7/8 | 2 | ROLL PIN | GOUPILLE ROULEE<br>SPINA ELASTICA | SPANNHUELSE<br>PASADOR ELASTICO |
| 15* | N856073 | 1 | | 2 | SHAFT | ARBRE<br>ALBERO | WELLE<br>ARBOL |
| 16* | 852083 | 1 | | 2 | COMP.SPRING | RESSORT DE COMPR<br>MOLLA COMPOSTA | DRUCKFEDER<br>RESORTE DE COMP. |
| 17* | 853845 | 1 | | 2 | BUSH | BAGUE<br>BOCCOLA | RING<br>CASQUILLO |
| 18* | 8701229 | 1 | M12 X 80 | 4 | CAPSCREW | VIS BOUCHON<br>TAPPO A VITE | HUTSCHRAUBE<br>TORNILLO TAPON |

[A] INCLUDED IN 6000624
COMPRIS DANS 6000624
IN 6000624
INCLUSO IN 6000624
INCLUIDO EN 6000624

[B] INCLUDED IN 6000759
COMPRIS DANS 6000759
IN 6000759
INCLUSO IN 6000759
INCLUIDO EN 6000759

**Spreading Mechanisms**
**Dispositifs D'Epandage**
**Systeme Der Streuwerkzeuge**
**Organi Di Spandimento**
**Dispositivos De Distribucion**

# 100-135

**Granular Herbicide / Insecticide**
**Herbicide / Insecticide En Granulés**
**Herbizid / Insektizid Granulat**
**Erbicida / Insecticida Granulato**
**Herbicida / Insecticida Granulado**

5-PL45-007-B

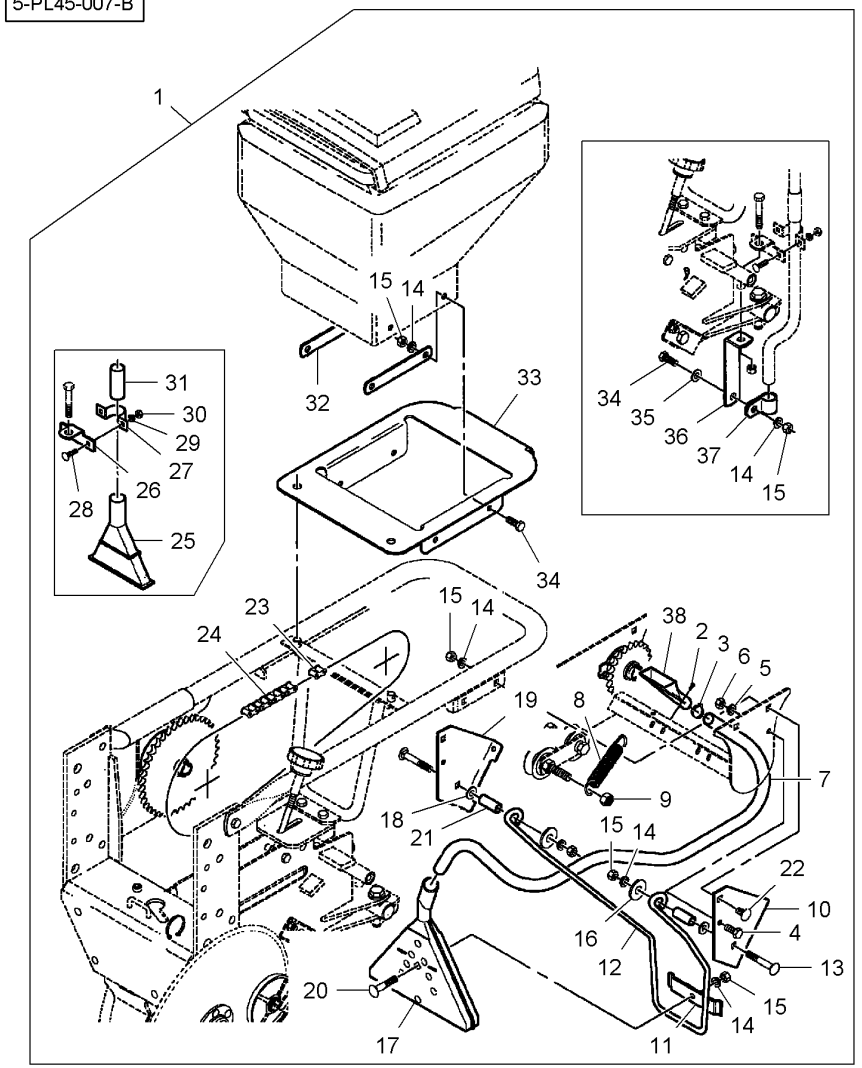


| | | | | | |
|---|---|---|---|---|---|
| 1* | 6000761 | 100-140 No 1<br>100-145 No 1<br>100-150 No 1 | **1** | KIT, ATTACHMENT | JEU ACCESSOIRES<br>KIT ACCESSORI | SATZ ANBAUTEILE<br>JUEGO ACCESORIO |
| 2* | 15180 | 1 No 10-16 X 1/2 | **4** | SCREW | VIS<br>VITE | SCHRAUBE<br>TORNILLO |
| 3* | 7741119 | 1 | **2** | HOSE CLIP | COLLIER DURITE<br>COLLARE DI TUBO | SCHLAUCHBINDER<br>ABRAZADERA TUBO |
| 4* | 700708358 | 1 M8 X 16 | **2** | CAPSCREW | VIS BOUCHON<br>TAPPO A VITE | HUTSCHRAUBE<br>TORNILLO TAPON |
| 5* | 700700324 | 1 M8 | **2** | LOCK WASHER | RONDELLE FREIN<br>RONDELLA ARRESTO | SICHERUNGSRING<br>ARANDELA SEGURID |
| 6* | 1702893 | 1 M8 | **2** | NUT | ECROU<br>DADO | MUTTER<br>TUERCA |
| 7* | 852489 | 1 | **2** | HOSE | DURITE<br>TUBO FLESSIBILE | SCHLAUCH<br>TUBO DE GOMA |
| 8* | **700717154** | 1 | **2** | SPRING | RESSORT<br>MOLLA | FEDER<br>MUELLE |
| 9* | N858844 | 1 M12 | **2** | LOCKNUT | ECROU FREIN<br>AUTOBLOCCANTE | SICHERUNGSMUTTER<br>CONTRATUERCA |
| 10* | 700158333 | 1 ◀ | **2** | SUPPORT | SUPPORT<br>SOPPORTO | TRAGER<br>SOPORTE |
| 11* | DA22902 | 1 | **2** | BRACKET | SUPPORT FIXATION<br>STAFFETTA | HALTEARM<br>SOPORTE |
| 12* | 852642 | 1 | **2** | ROD | TRINGLE<br>ASTA | STANGE<br>VARILLA |
| 13* | 7700867 | 1 M10 X 70 | **4** | SCREW | VIS<br>VITE | SCHRAUBE<br>TORNILLO |
| 14* | 700708367 | 1 M10 | **24** | LOCK WASHER | RONDELLE FREIN<br>RONDELLA ARRESTO | SICHERUNGSRING<br>ARANDELA SEGURID |
| 15* | 7704398 | 1 M10 | **24** | NUT | ECROU<br>DADO | MUTTER<br>TUERCA |
| 16* | 700709605 | 1 1/2" | **4** | WASHER | RONDELLE<br>RONDELLA | SCHEIBE<br>ARANDELA |
| 17* | DAA30614 | 1 | **2** | DIFFUSER | DIFFUSEUR<br>DIFFUSORE | DIFFUSOR<br>DIFUSOR |
| 18* | 700717622 | 1 | **1** | WASHER | RONDELLE<br>RONDELLA | SCHEIBE<br>ARANDELA |
| 19* | 700158334 | 1 ▶ | **2** | SUPPORT | SUPPORT<br>SOPPORTO | TRAGER<br>SOPORTE |
| 20* | 7700826 | 1 M10 X 50 | **2** | SCREW | VIS<br>VITE | SCHRAUBE<br>TORNILLO |
| 21* | 852684 | 1 | **4** | SPACER | ENTRETOISE<br>DISTANZIALE | ABSTANDSTUECK<br>DISCO ESPACIADOR |
| 22* | 7700545 | 1 M10 X 20 | **8** | SCREW | VIS<br>VITE | SCHRAUBE<br>TORNILLO |
| 23* | **70915002** | 1 No 41 R/C | **1** | LINK | MAILLON<br>MAGLIA | GLIED<br>ESLABON |
| 24* | N859055 | 1 No 41<br>93 Pitches | **2** | ROLL OF CHAIN | ROULEAU CHAINE<br>RULLO PER CATENA | KETTE METERWARE<br>CADENA 5M |
| 25* | DB32601 | 1 [A] | **2** | DIFFUSER | DIFFUSEUR<br>DIFFUSORE | DIFFUSOR<br>DIFUSOR |

**Spreading Mechanisms**
**Dispositifs D'Epandage**
**Systeme Der Streuwerkzeuge**
**Organi Di Spandimento**
**Dispositivos De Distribucion**

**100-135**

**Granular Herbicide / Insecticide**
**Herbicide / Insecticide En Granulés**
**Herbizid / Insektizid Granulat**
**Erbicida / Insecticida Granulato**
**Herbicida / Insecticida Granulado**

5-PL45-007-B

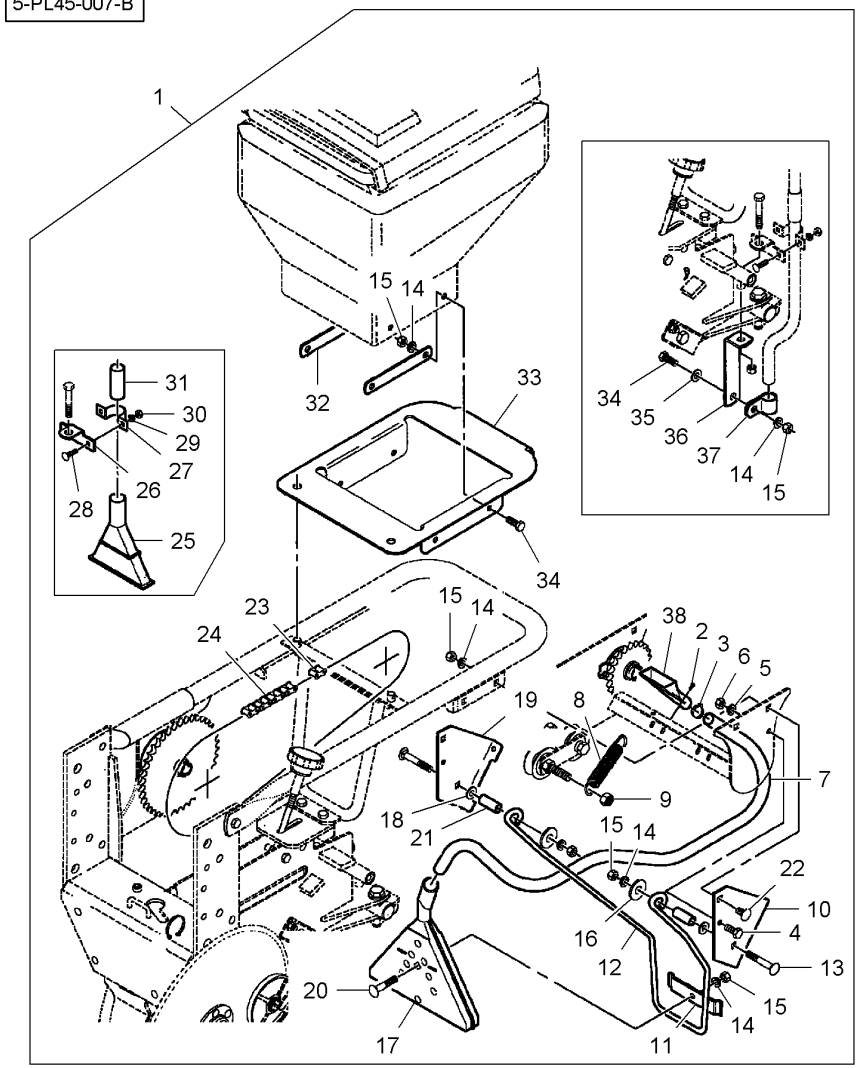


| | | | | | | |
|---|---|---|---|---|---|---|
| 26* | N857548 | 1 [A] | 2 | BRACKET | SUPPORT FIXATION<br>STAFFETTA | HALTEARM<br>SOPORTE |
| 27* | 852008 | 1 [A] | 2 | CLAMP | COLLIER<br>FASCETTA | HALTESCHELLE<br>ABRAZADERA |
| 28* | 7702602 | 1 [A]<br>M6 X 25 | 4 | SCREW | VIS<br>VITE | SCHRAUBE<br>TORNILLO |
| 29* | 705269 | 1 [A]<br>M6 | 4 | SPRING WASHER | RONDELLE ELASTIQ<br>RONDELLA ELASTI. | FEDERSCHEIBE<br>ARANDELA ELASTI. |
| 30* | 7704703 | 1 [A]<br>M6 | 4 | NUT | ECROU<br>DADO | MUTTER<br>TUERCA |
| 31* | 852197 | 1 [A] | 2 | CONNECTOR | BORNE.<br>MORSETTO. | DOPPELNIPPEL<br>CONECTOR |
| 32* | 852478 | 1 | 4 | STRAP | PATTE<br>CORREGGIA | LASCHE<br>FAJA |
| 33* | N858915 | 1 | 2 | BRACKET | SUPPORT FIXATION<br>STAFFETTA | HALTEARM<br>SOPORTE |
| 34* | 700708349 | 1 M10 X 25 | 10 | BOLT | BOULON<br>BULLONE | BOLZEN<br>BULON |
| 35* | 705657 | 1 [B]<br>3/8" | 2 | WASHER | RONDELLE<br>RONDELLA | SCHEIBE<br>ARANDELA |
| 36* | 700155154 | 1 [B] | 2 | BRACKET | SUPPORT FIXATION<br>STAFFETTA | HALTEARM<br>SOPORTE |
| 37* | 703895 | 1 [B] | 2 | CLAMP | COLLIER<br>FASCETTA | HALTESCHELLE<br>ABRAZADERA |
| 38* | DA37497 | 1 | 2 | FUNNEL | ENTONNOIR<br>IMBUTO | TRICHTER<br>EMBUDO |

[A] FOR INSECTICIDE USE ONLY
SEULEMENT POUR INSECTICIDE
NUR FÜR INSEKTIZID
SOLTANTO PER INSETTICIDA
SOLAMENTE PARA INSECTICIDA

[B] FOR FURROW CHEMICAL APPLICATION ONLY
SEULEMENT POUR APPLICATION CHIMIQUE
NUR FÜR CHEMISCHE ANWENDUNG
SOLTANTO PER APPLICAZIONE CHIMICA
SOLAMENTE PARA APLICACIÓN QUÍMICA

**Spreading Mechanisms**
**Dispositifs D'Epandage**
**Systeme Der Streuwerkzeuge**
**Organi Di Spandimento**
**Dispositivos De Distribucion**

# 100-140

**Granular Herbicide / Insecticide**
**Herbicide / Insecticide En Granulés**
**Herbizid / Insektizid Granulat**
**Erbicida / Insecticida Granulato**
**Herbicida / Insecticida Granulado**

5-PL45-008-B

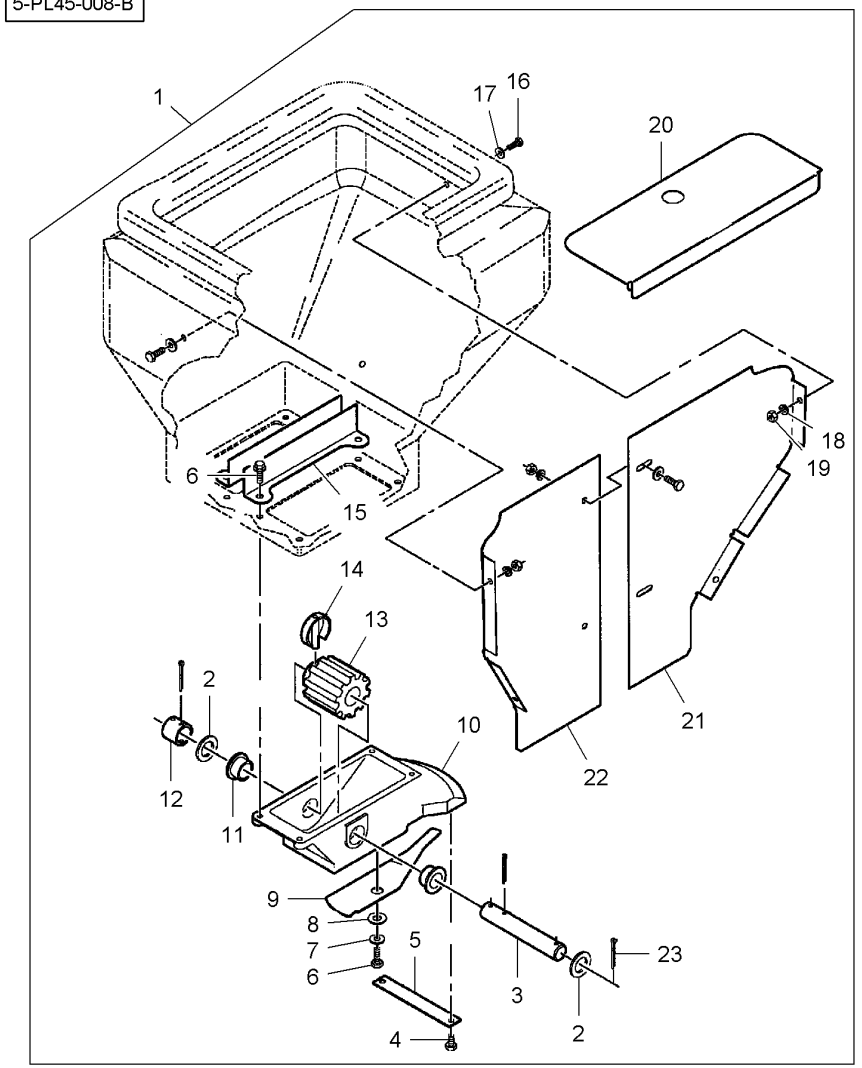


| | | | | | | |
|---|---|---|---|---|---|---|
| 1* | 6000761 | | 100-135 No 1<br>100-145 No 1<br>100-150 No 1 | **1** | KIT, ATTACHMENT | JEU ACCESSOIRES<br>KIT ACCESSORI | SATZ ANBAUTEILE<br>JUEGO ACCESORIO |
| 2* | 700717668 | 1 | | **4** | WASHER | RONDELLE<br>RONDELLA | SCHEIBE<br>ARANDELA |
| 3* | 853049 | 1 | | **2** | SHAFT | ARBRE<br>ALBERO | WELLE<br>ARBOL |
| 4* | 853792 | 1 | No 10 X 3/8 | **4** | SCREW | VIS<br>VITE | SCHRAUBE<br>TORNILLO |
| 5* | DA26006 | 1 | | **2** | SUPPORT | SUPPORT<br>SOPPORTO | TRAGER<br>SOPORTE |
| 6* | 701565 | 1 | 1/4"-20 X 3/4 | **10** | SCREW | VIS<br>VITE | SCHRAUBE<br>TORNILLO |
| 7* | 705707 | 1 | 1/4" | **2** | WASHER | RONDELLE<br>RONDELLA | SCHEIBE<br>ARANDELA |
| 8* | DB13845 | 1 | | **2** | SPRING WASHER | RONDELLE ELASTIQ<br>RONDELLA ELASTI. | FEDERSCHEIBE<br>ARANDELA ELASTI. |
| 9* | DA33403 | 1 | | **2** | PLATE | PLAQUE<br>PIASTRA | PLATTE<br>PLATO |
| 10* | DA36199 | 1 | | **2** | HOUSING | CARTER<br>CARCASSA | GEHAEUSE<br>ALOJAMIENTO |
| 11* | DA25845 | 1 | | **4** | BEARING | COUSSINET<br>CUSCINETTO | LAGER<br>COJINETE |
| 12* | 854094 | 1 | | **2** | BUSH | BAGUE<br>BOCCOLA | RING<br>CASQUILLO |
| 13* | DAA22977 | 1 | | **2** | WHEEL | ROUE<br>RUOTA | RAD<br>RUEDA |
| 14* | DAB12703 | 1 | | **2** | PIN | GOUPILLE<br>COPPIGLIA | STIFT<br>PASADOR |
| 15* | 852736 | 1 | | **4** | SUPPORT | SUPPORT<br>SOPPORTO | TRAGER<br>SOPORTE |
| 16* | 700728082 | 1 | 1/4"-20 X 3/4 | **12** | SCREW | VIS<br>VITE | SCHRAUBE<br>TORNILLO |
| 17* | 700728084 | 1 | 1/4" | **12** | WASHER | RONDELLE<br>RONDELLA | SCHEIBE<br>ARANDELA |
| 18* | 700728085 | 1 | 1/4" | **12** | SPRING WASHER | RONDELLE ELASTIQ<br>RONDELLA ELASTI. | FEDERSCHEIBE<br>ARANDELA ELASTI. |
| 19* | 17596 | 1 | 1/4"-20 | **12** | NUT | ECROU<br>DADO | MUTTER<br>TUERCA |
| 20* | 700158671 | 1 | | **2** | COVER | COUVERCLE<br>COPERCHIO | ABDECKUNG.<br>CUBIERTA |
| 21* | 700158336 | 1 | | **2** | DIVIDER | DIVISEUR<br>DIVISORE | ABTEILER<br>ASA DESVIADOR |
| 22* | 700158335 | 1 | | **2** | DIVIDER | DIVISEUR<br>DIVISORE | ABTEILER<br>ASA DESVIADOR |
| 23* | 62190 | 1 | 5/32" X 1-1/2 | **4** | PIN | GOUPILLE<br>COPPIGLIA | STIFT<br>PASADOR |

**Spreading Mechanisms**
**Dispositifs D'Epandage**
**Systeme Der Streuwerkzeuge**
**Organi Di Spandimento**
**Dispositivos De Distribucion**

# 100-145

**Granular Herbicide / Insecticide**
**Herbicide / Insecticide En Granulés**
**Herbizid / Insektizid Granulat**
**Erbicida / Insecticida Granulato**
**Herbicida / Insecticida Granulado**

5-PL45-009-B

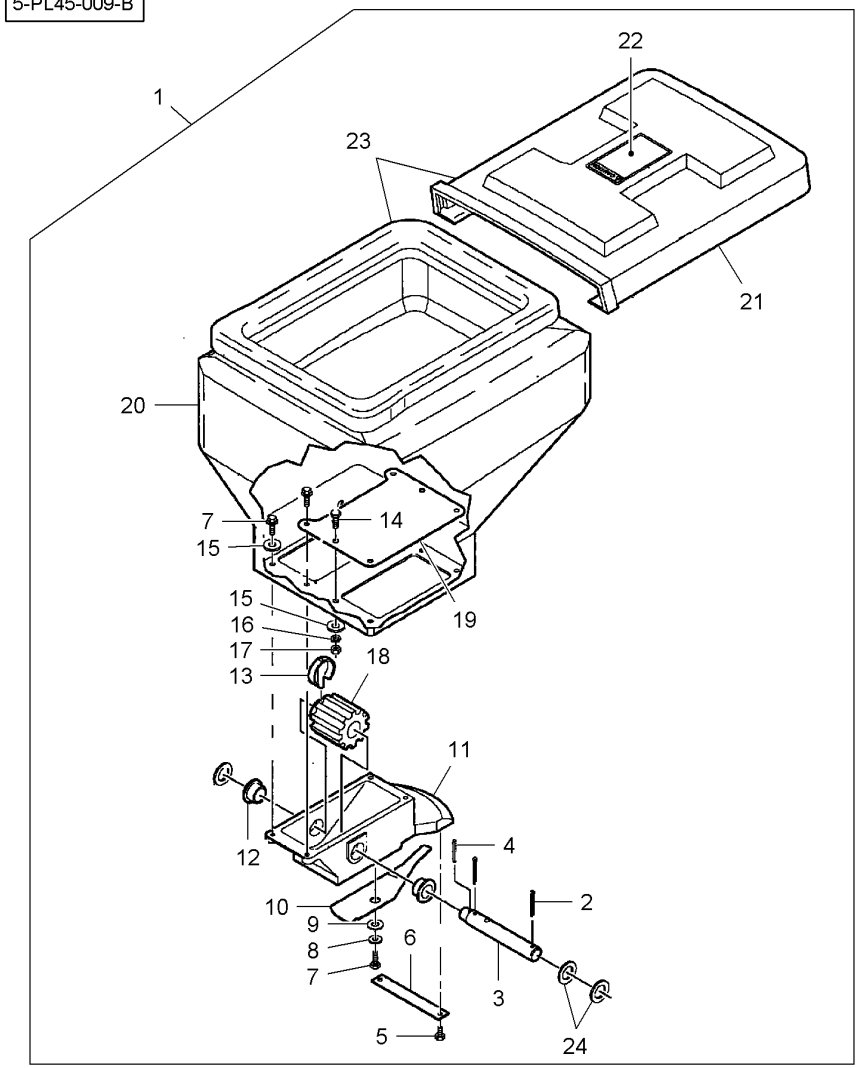


| | | | | | | |
|---|---|---|---|---|---|---|
| 1* | 6000761 | | 100-135 No 1<br>100-140 No 1<br>100-150 No 1 | 1 | KIT, ATTACHMENT | JEU ACCESSOIRES<br>KIT ACCESSORI | SATZ ANBAUTEILE<br>JUEGO ACCESORIO |
| 2* | 62190 | 1 | 5/32" X 1-1/2 | 4 | PIN | GOUPILLE<br>COPPIGLIA | STIFT<br>PASADOR |
| 3* | 852076 | 1 | | 2 | SHAFT | ARBRE<br>ALBERO | WELLE<br>ARBOL |
| 4* | W933173 | 1 | 5/32" X 1-1/4 | 2 | ROLL PIN | GOUPILLE ROULEE<br>SPINA ELASTICA | SPANNHUELSE<br>PASADOR ELASTICO |
| 5* | 853792 | 1 | No 10 X 3/8 | 4 | SCREW | VIS<br>VITE | SCHRAUBE<br>TORNILLO |
| 6* | DA26006 | 1 | | 2 | SUPPORT | SUPPORT<br>SOPPORTO | TRAGER<br>SOPORTE |
| 7* | 701565 | 1 | 1/4"-20 X 3/4 | 10 | SCREW | VIS<br>VITE | SCHRAUBE<br>TORNILLO |
| 8* | 705707 | 1 | 1/4" | 2 | WASHER | RONDELLE<br>RONDELLA | SCHEIBE<br>ARANDELA |
| 9* | DB13845 | 1 | | 2 | SPRING WASHER | RONDELLE ELASTIQ<br>RONDELLA ELASTI. | FEDERSCHEIBE<br>ARANDELA ELASTI. |
| 10* | DA33403 | 1 | | 2 | PLATE | PLAQUE<br>PIASTRA | PLATTE<br>PLATO |
| 11* | DA36199 | 1 | | 2 | HOUSING | CARTER<br>CARCASSA | GEHAEUSE<br>ALOJAMIENTO |
| 12* | DA25845 | 1 | | 4 | BEARING | COUSSINET<br>CUSCINETTO | LAGER<br>COJINETE |
| 13* | DAB12703 | 1 | | 2 | PIN | GOUPILLE<br>COPPIGLIA | STIFT<br>PASADOR |
| 14* | 7703457 | 1 | 1/4"-20 X 3/4 | 8 | BOLT UNC | BOULON UNC<br>BULLONE UNC | MASCH.SCHRB.UNC<br>PERNO UNC |
| 15* | 700717665 | 1 | | 12 | WASHER | RONDELLE<br>RONDELLA | SCHEIBE<br>ARANDELA |
| 16* | 705012 | 1 | 1/4" | 8 | LOCK WASHER | RONDELLE FREIN<br>RONDELLA ARRESTO | SICHERUNGSRING<br>ARANDELA SEGURID |
| 17* | 704007 | 1 | 1/4"-20 | 8 | NUT UNC | ECROU UNC<br>DADO UNC | MUTTER UNC<br>TUERCA UNC |
| 18* | DAA22977 | 1 | | 2 | WHEEL | ROUE<br>RUOTA | RAD<br>RUEDA |
| 19* | 852479 | 1 | | 2 | PLATE | PLAQUE<br>PIASTRA | PLATTE<br>PLATO |
| 20* | N858927 | 23 | | 1 | HOPPER | TREMIE<br>TRAMOGGIA | KORNTANK<br>TOLVA |
| 21* | 853108 | 23 | | 1 | LID | PLAQUE COUVERCLE<br>COPERTA | ABDECKPLATTE<br>COBERTURA |
| 22* | 852652 | 1 | | 2 | DECAL | DECALCOMANIE<br>DECALCOMANIA | AUFKLEBER<br>CALCOMANIA |
| 23* | N858969 | 1 | | 2 | HOPPER | TREMIE<br>TRAMOGGIA | KORNTANK<br>TOLVA |
| 24* | 700717668 | 1 | | 6 | WASHER | RONDELLE<br>RONDELLA | SCHEIBE<br>ARANDELA |

**Spreading Mechanisms**
**Dispositifs D'Epandage**
**Systeme Der Streuwerkzeuge**
**Organi Di Spandimento**
**Dispositivos De Distribucion**

**100-150**

**Granular Herbicide / Insecticide**
**Herbicide / Insecticide En Granulés**
**Herbizid / Insektizid Granulat**
**Erbicida / Insecticida Granulato**
**Herbicida / Insecticida Granulado**

5-PL45-010-B

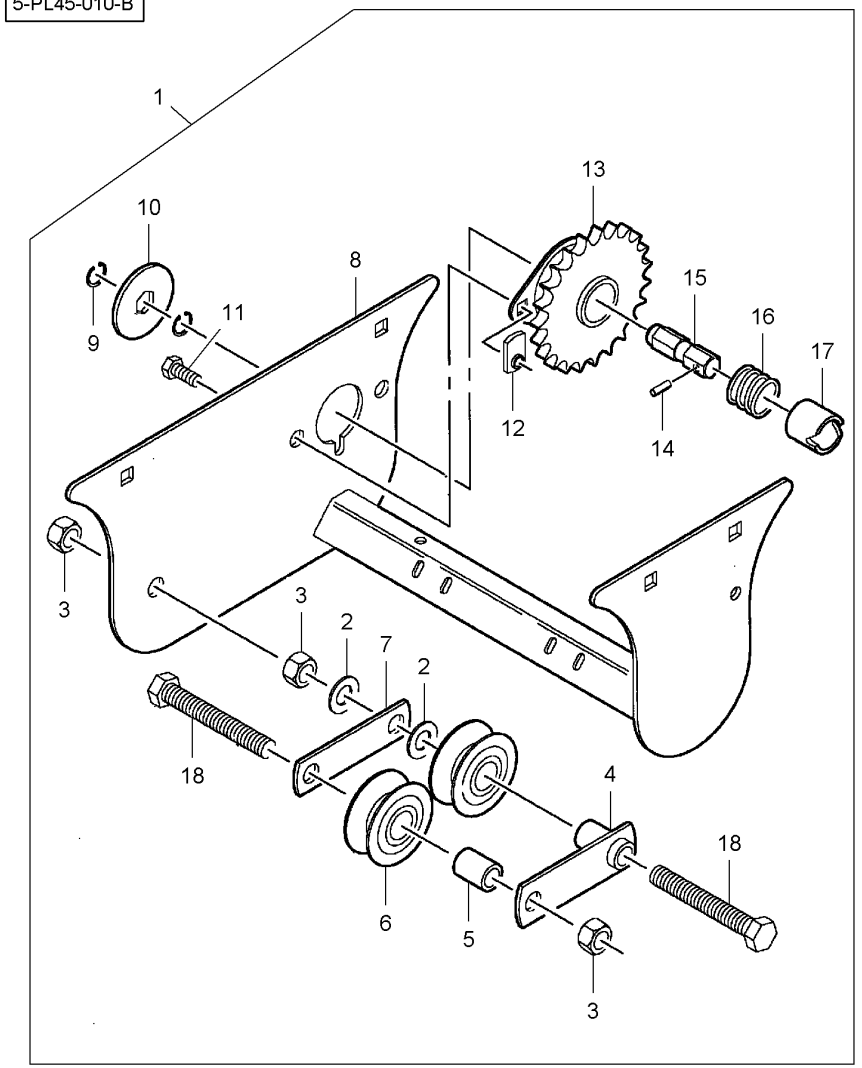


| | | | | | | |
|---|---|---|---|---|---|---|
| 1* | 6000761 | | 100-135 No 1<br>100-140 No 1<br>100-145 No 1 | **1** | KIT, ATTACHMENT | JEU ACCESSOIRES<br>KIT ACCESSORI | SATZ ANBAUTEILE<br>JUEGO ACCESORIO |
| 2* | 10491 | 1 | | **4** | WASHER | RONDELLE<br>RONDELLA | SCHEIBE<br>ARANDELA |
| 3* | N858844 | 1 | M12 | **4** | LOCKNUT | ECROU FREIN<br>AUTOBLOCCANTE | SICHERUNGSMUTTER<br>CONTRATUERCA |
| 4* | 700164021 | 1 | | **2** | TIGHTENER | TENSEUR<br>TENDITORE* | SPANNROLLE<br>TENSADOR |
| 5* | WSP1344 | 1 | | **2** | SPACER | ENTRETOISE<br>DISTANZIALE | ABSTANDSTUECK<br>DISCO ESPACIADOR |
| 6* | **853932** | 1 | | **4** | ROLLER | GALET<br>ROTELLA | ROLLE<br>RODILLO |
| 7* | **W246431B** | 1 | | **2** | STRAP | PATTE<br>CORREGGIA | LASCHE<br>FAJA |
| 8* | 700163860P | 1 | | **2** | FRAME | BATI<br>TELAIO | RAHMEN<br>BASTIDOR |
| 9* | W944128-4 | 1 | | **4** | RING | ANNEAU<br>ANELLO | RING.<br>ANILLO |
| 10* | 855034 | 1 | | **2** | RING | ANNEAU<br>ANELLO | RING.<br>ANILLO |
| 11* | 700725326 | 1 | M8 X 16 | **4** | SCREW | VIS<br>VITE | SCHRAUBE<br>TORNILLO |
| 12* | N858774 | 1 | M8 | **4** | NUT | ECROU<br>DADO | MUTTER<br>TUERCA |
| 13* | 852036 | 1 | | **2** | COG | ROUE DENTEE<br>INCASTRO | SCHALTZAHN<br>DIENTE DE RUEDA |
| 14* | W933186 | 1 | 3/16" X 7/8 | **2** | ROLL PIN | GOUPILLE ROULEE<br>SPINA ELASTICA | SPANNHUELSE<br>PASADOR ELASTICO |
| 15* | N856073 | 1 | | **2** | SHAFT | ARBRE<br>ALBERO | WELLE<br>ARBOL |
| 16* | 852083 | 1 | | **2** | COMP.SPRING | RESSORT DE COMPR<br>MOLLA COMPOSTA | DRUCKFEDER<br>RESORTE DE COMP. |
| 17* | 853845 | 1 | | **2** | BUSH | BAGUE<br>BOCCOLA | RING<br>CASQUILLO |
| 18* | 8701229 | 1 | M12 X 80 | **4** | CAPSCREW | VIS BOUCHON<br>TAPPO A VITE | HUTSCHRAUBE<br>TORNILLO TAPON |

110

**Double Disc**
**Double Disque**
**Doppelscheiben**
**Disco Doppio**
**Disco Doble**

**110-5**

5-PL61-001-B

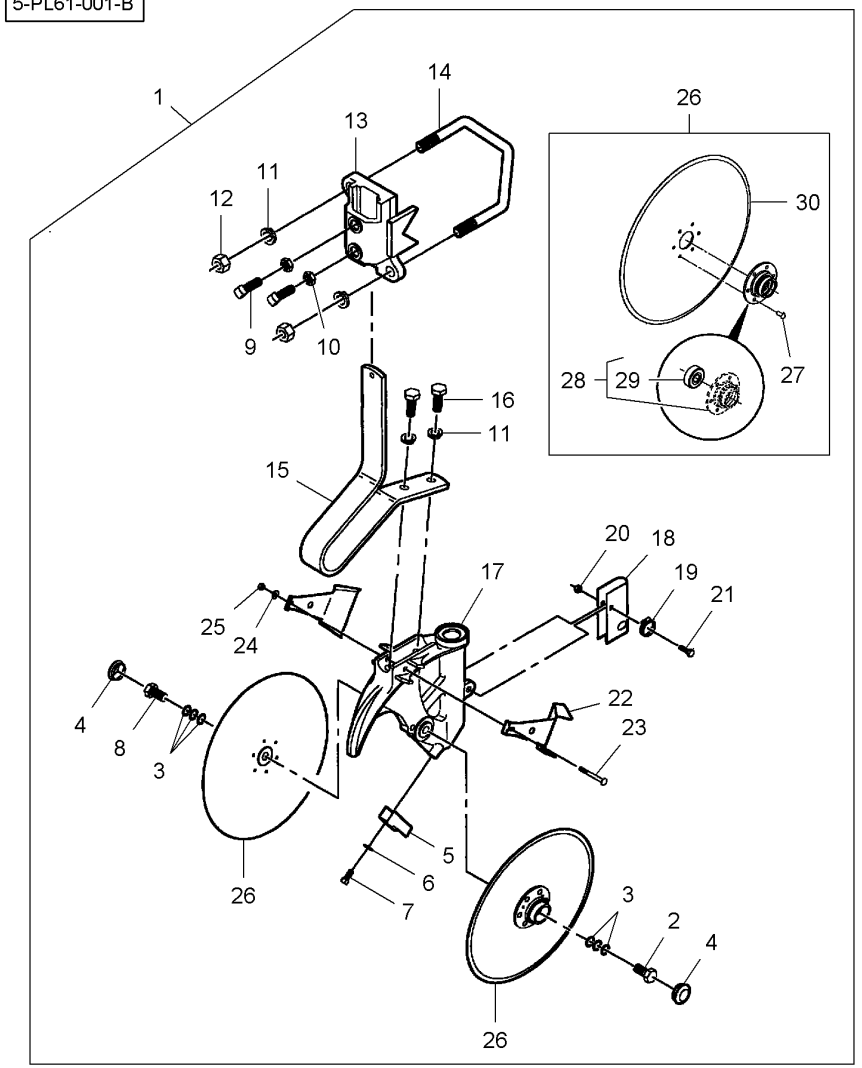


| | | | | | | |
|---|---|---|---|---|---|---|
| 1 | 6000129 | | **1** | KIT, ATTACHMENT | JEU ACCESSOIRES<br>KIT ACCESSORI | SATZ ANBAUTEILE<br>JUEGO ACCESORIO |
| 2 | W247166B | 1 5/8"-11 X 1-1/4 | **2** | BOLT | BOULON<br>BULLONE | BOLZEN<br>BULON |
| 3 | W302047B | 1 | **12** | WASHER | RONDELLE<br>RONDELLA | SCHEIBE<br>ARANDELA |
| 4 | **W247165B** | 1 | **4** | CAP | CHAPEAU<br>CAPUCHON | KAPPE<br>TAPA |
| 5 | **W247460B** | 1 | **2** | SCRAPER | RACLETTE<br>PALETTA RASCHIA. | KRATZER<br>PALETA |
| 6 | 70913544 | 1 3/8" | **2** | WASHER | RONDELLE<br>RONDELLA | SCHEIBE<br>ARANDELA |
| 7 | 353689X1 | 1 3/8"-16 X 3/4 | **2** | BOLT UNC | BOULON UNC<br>BULLONE UNC | MASCH.SCHRB.UNC<br>PERNO UNC |
| 8 | 70923151 | 1 5/8"-11 X 1-1/4 | **2** | BOLT UNC | BOULON UNC<br>BULLONE UNC | MASCH.SCHRB.UNC<br>PERNO UNC |
| 9 | 70901301 | 1 5/8"-11 X 1-3/4 | **4** | SCREW | VIS<br>VITE | SCHRAUBE<br>TORNILLO |
| 10 | 375112X1 | 1 5/8"-11 | **4** | NUT UNC | ECROU UNC<br>DADO UNC | MUTTER UNC<br>TUERCA UNC |
| 11 | 353433X1 | 1 5/8" | **8** | LOCK WASHER | RONDELLE FREIN<br>RONDELLA ARRESTO | SICHERUNGSRING<br>ARANDELA SEGURID |
| 12 | 70932665 | 1 5/8"-11 | **4** | NUT UNC | ECROU UNC<br>DADO UNC | MUTTER UNC<br>TUERCA UNC |
| 13 | N851220 | 1 | **2** | CLAMP | COLLIER<br>FASCETTA | HALTESCHELLE<br>ABRAZADERA |
| 14 | W247876B | 1 | **2** | U BOLT | ETRIER FILETE<br>BULLONE A STAFFA | BUEGELSCHRAUBE<br>BRIDA EN U |
| 15 | W246704B | 1 | **2** | SPRING | RESSORT<br>MOLLA | FEDER<br>MUELLE |
| 16 | 353727X1 | 1 5/8"-11 X 1-3/4 | **4** | BOLT UNC | BOULON UNC<br>BULLONE UNC | MASCH.SCHRB.UNC<br>PERNO UNC |
| 17 | W246705B | 1 | **2** | BRACKET | SUPPORT FIXATION<br>STAFFETTA | HALTEARM<br>SOPORTE |
| 18 | W247881B | 1 | **2** | RETAINER | RETENEUR<br>FERMO | HALTERING<br>RETENEDOR |
| 19 | 70921910 | 1 | **2** | HOSE CLIP | COLLIER DURITE<br>COLLARE DI TUBO | SCHLAUCHBINDER<br>ABRAZADERA TUBO |
| 20 | 10162 | 1 5/16"-18 | **2** | LOCKNUT | ECROU FREIN<br>AUTOBLOCCANTE | SICHERUNGSMUTTER<br>CONTRATUERCA |
| 21 | 70921333 | 1 5/16"-18 X 1 | **2** | BOLT UNC | BOULON UNC<br>BULLONE UNC | MASCH.SCHRB.UNC<br>PERNO UNC |
| 22 | **W247461B** | 1 | **4** | SCRAPER | RACLETTE<br>PALETTA RASCHIA. | KRATZER<br>PALETA |
| 23 | W900027-3 | 1 1/4"-20 X 3-3/4 | **2** | SCREW | VIS<br>VITE | SCHRAUBE<br>TORNILLO |
| 24 | K2878 | 1 | **2** | WASHER | RONDELLE<br>RONDELLA | SCHEIBE<br>ARANDELA |
| 25 | 70923358 | 1 1/4"-20 | **2** | LOCKNUT | ECROU FREIN<br>AUTOBLOCCANTE | SICHERUNGSMUTTER<br>CONTRATUERCA |
| 26 | 852628 | 1 | **4** | DISC | DISQUE<br>DISCO | SCHEIBE<br>DISCO |

**Double Disc**
**Double Disque**
**Doppelscheiben**
**Disco Doppio**
**Disco Doble**

**110-5**

5-PL61-001-B

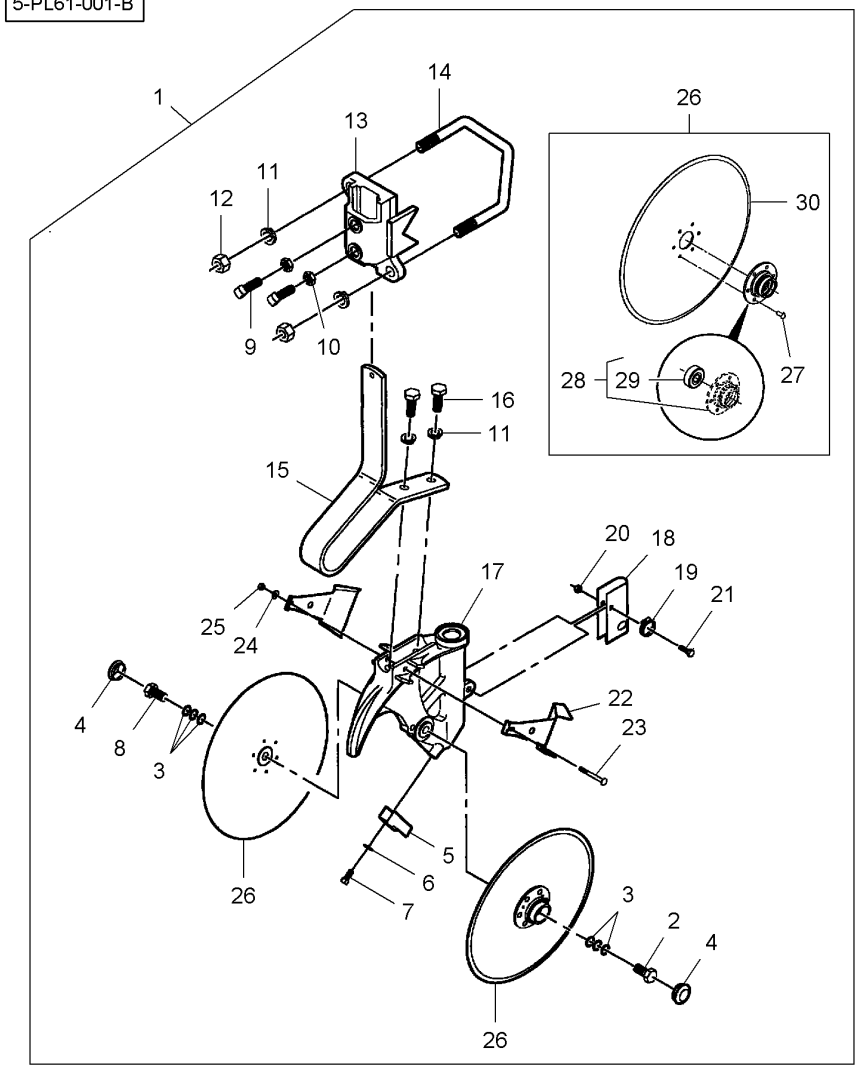


| | | | | | | |
|---|---|---|---|---|---|---|
| 27 | N12959 | 26 | **6** | RIVET | RIVET<br>RIVETTO | NIET<br>REMACHE |
| 28 | 852630 | 26 | **1** | HUB | MOYEU<br>MOZZO | NABE<br>CUBO |
| 29 | **852270** | 28 | **1** | BEARING ASSY | ROULEMENT<br>CUSCINETTO COMPL | RADIALLAGER<br>RODAMIENTO RAD |
| 30* | 30-1005553 | 26 | **1** | DISC | DISQUE<br>DISCO | SCHEIBE<br>DISCO |

**Single Disc**
**Simple Disque**
**Einzeltellerraeder**
**Simplice Disco**
**Simple Disco**

# 110-10

**For Dry Fertilizer**
**Pour Engrais Sec**
**Fur Trockenes Dünger**
**Per Concimi Secco**
**Para Abono Seco**

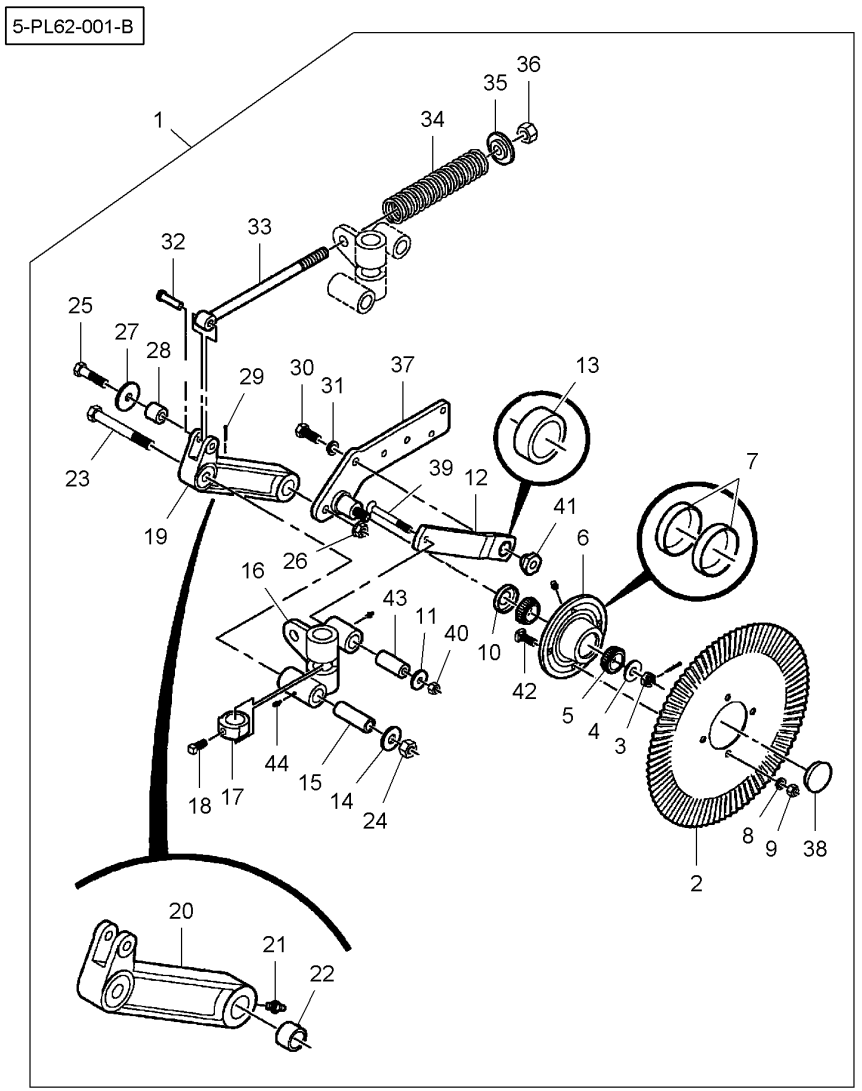


| | | | | | | |
|---|---|---|---|---|---|---|
| 1 | 6000356 | | [A] 110-15 No 1 | **1** KIT, ATTACHMENT | JEU ACCESSOIRES<br>KIT ACCESSORI | SATZ ANBAUTEILE<br>JUEGO ACCESORIO |
| 1 | 6000535 | | [B] 110-15 No 1 | **1** KIT, ATTACHMENT | JEU ACCESSOIRES<br>KIT ACCESSORI | SATZ ANBAUTEILE<br>JUEGO ACCESORIO |
| 1 | 6000526 | | [C] 110-20 No 1 | **1** KIT, ATTACHMENT | JEU ACCESSOIRES<br>KIT ACCESSORI | SATZ ANBAUTEILE<br>JUEGO ACCESORIO |
| 2 | 852891 | 1 | [A] | **2** DISC | DISQUE<br>DISCO | SCHEIBE<br>DISCO |
| 2 | YM2571-179 | 1 | [B] | **2** DISC | DISQUE<br>DISCO | SCHEIBE<br>DISCO |
| 2 | YM2571-165 | 1 | [C] | **2** DISC | DISQUE<br>DISCO | SCHEIBE<br>DISCO |
| 3 | YM2520-469 | 1 | 5/8"-18 | **2** NUT | ECROU<br>DADO | MUTTER<br>TUERCA |
| 4 | YM2526-449 | 1 | 5/8" | **2** WASHER | RONDELLE<br>RONDELLA | SCHEIBE<br>ARANDELA |
| 5 | YM2550-027 | 1 | | **4** BEARING CONE | CONE ROULEMENT<br>CONO CUSCINETTO | LAGERINNENRING<br>CONO COJINETE |
| 6 | YM2900-105 | 1 | | **2** HUB | MOYEU<br>MOZZO | NABE<br>CUBO |
| 7 | YM2550-029 | 6 | | **2** BEARING CUP | CUVETTE ROULEMNT<br>COPPA CUSCINETTO | LAGERAUSSENRING<br>ANILLO COJINETE |
| 8* | 353439X1 | 1 | 1/2" | **8** LOCK WASHER | RONDELLE FREIN<br>RONDELLA ARRESTO | SICHERUNGSRING<br>ARANDELA SEGURID |
| 9 | 375098X1 | 1 | 1/2"-13 | **8** NUT UNC | ECROU UNC<br>DADO UNC | MUTTER UNC<br>TUERCA UNC |
| 10 | YM2550-115 | 1 | | **2** SEAL | JOINT ETANCHEITE<br>GIUNTO ROTONDO | DICHTRING<br>JUNTA REDONDA |
| 11 | YM2527-340 | 1 | | **2** WASHER | RONDELLE<br>RONDELLA | SCHEIBE<br>ARANDELA |
| 12 | YM2995-111 | 1 | | **2** ARM | BRAS<br>BRACCIO | SCHARHEBEL<br>BRAZO |
| 13 | YM2528-360 | 12 | | **1** BUSH | BAGUE<br>BOCCOLA | RING<br>CASQUILLO |
| 14 | YM2527-532 | 1 | | **2** WASHER | RONDELLE<br>RONDELLA | SCHEIBE<br>ARANDELA |
| 15 | YM2570-704 | 1 | | **2** SLEEVE | MANCHON<br>MANICOTTO | HUELSE<br>MANGUITO |
| 16 | YM2995-306 | 1 | ◀ | **1** KNUCKLE | NOIX<br>ARTICOLAZIONE | GELENK<br>CHARNELA. |
| 16 | YM2995-307 | 1 | ▶ | **1** KNUCKLE | NOIX<br>ARTICOLAZIONE | GELENK<br>CHARNELA. |
| 17 | YM2975-303 | 1 | | **2** COLLAR | COLLERETTE<br>COLLARE | KRAGEN<br>COLLARIN |
| 18 | YM2503-379 | 1 | 5/8"-11 X 1 | **2** SCREW | VIS<br>VITE | SCHRAUBE<br>TORNILLO |
| 19 | YM2995-110 | 1 | | **2** ARM | BRAS<br>BRACCIO | SCHARHEBEL<br>BRAZO |
| 20 | YM2555-095 | 19 | | **1** ARM | BRAS<br>BRACCIO | SCHARHEBEL<br>BRAZO |
| 21 | YM2533-110 | 19 | 1/4"-28 | **1** UNION | RACCORD<br>RACCORDO | VERSCHRAUBUNG<br>RACOR |

**Single Disc**
**Simple Disque**
**Einzeltellerraeder**
**Simplice Disco**
**Simple Disco**

# 110-10

**For Dry Fertilizer**
**Pour Engrais Sec**
**Fur Trockenes Dünger**
**Per Concimi Secco**
**Para Abono Seco**

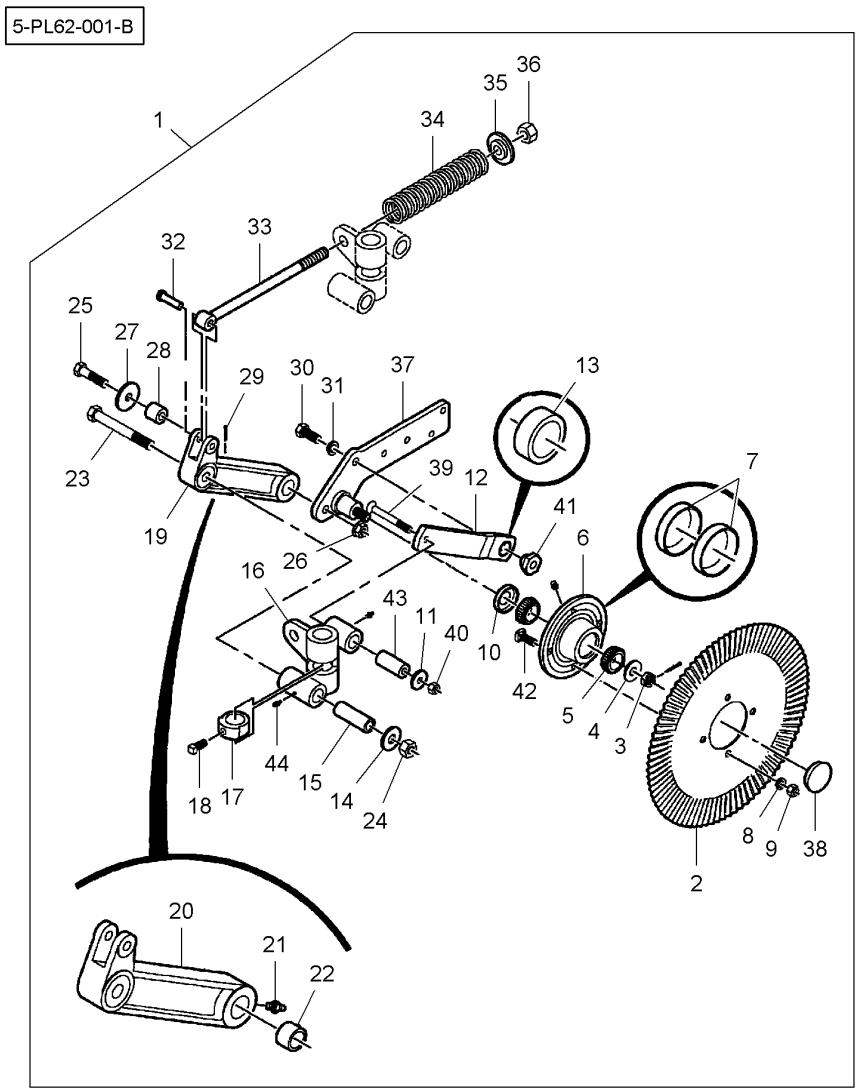


| | | | | | | |
|---|---|---|---|---|---|---|
| 22 | YM2528-362 | 19 | **1** | BUSH | BAGUE<br>BOCCOLA | RING<br>CASQUILLO |
| 23 | 7701535 | 1 3/4"-10 X 6 | **2** | BOLT | BOULON<br>BULLONE | BOLZEN<br>BULON |
| 24 | Y704718 | 1 3/4"-10 | **2** | LOCKNUT | ECROU FREIN<br>AUTOBLOCCANTE | SICHERUNGSMUTTER<br>CONTRATUERCA |
| 25 | 353729X1 | 1 5/8"-11 X 2-1/2 | **2** | BOLT UNC | BOULON UNC<br>BULLONE UNC | MASCH.SCHRB.UNC<br>PERNO UNC |
| 26 | 7774458 | 1 5/8"-11 | **2** | NUT | ECROU<br>DADO | MUTTER<br>TUERCA |
| 27 | YM2527-529 | 1 | **2** | WASHER | RONDELLE<br>RONDELLA | SCHEIBE<br>ARANDELA |
| 28 | YM2570-761 | 1 | **2** | BUSH | BAGUE<br>BOCCOLA | RING<br>CASQUILLO |
| 29 | 354061X1 | 1 1/8" X 1-1/4 | **4** | PIN | GOUPILLE<br>COPPIGLIA | STIFT<br>PASADOR |
| 30 | YM2502-339 | 1 5/8"-18 X 1-1/2 | **2** | SCREW | VIS<br>VITE | SCHRAUBE<br>TORNILLO |
| 31 | 353433X1 | 1 5/8" | **2** | LOCK WASHER | RONDELLE FREIN<br>RONDELLA ARRESTO | SICHERUNGSRING<br>ARANDELA SEGURID |
| 32 | YM2995-308 | 1 | **2** | PIN | GOUPILLE<br>COPPIGLIA | STIFT<br>PASADOR |
| 33 | YM2995-304 | 1 | **2** | ROD | TRINGLE<br>ASTA | STANGE<br>VARILLA |
| 34 | YM2550-795 | 1 | **2** | SPRING | RESSORT<br>MOLLA | FEDER<br>MUELLE |
| 35 | YM2555-096 | 1 | **2** | BUSH | BAGUE<br>BOCCOLA | RING<br>CASQUILLO |
| 36 | YM2520-515 | 1 3/4"-10 | **2** | NUT | ECROU<br>DADO | MUTTER<br>TUERCA |
| 37 | YM2995-206 | 1 ◀ | **1** | EXTENSION | RALLONGE<br>PROLUNGA | VERLAENGERUNG<br>ENSANCHE |
| 37 | YM2995-207 | 1 ▶ | **1** | EXTENSION | RALLONGE<br>PROLUNGA | VERLAENGERUNG<br>ENSANCHE |
| 38 | YM2570-375 | 1 | **2** | DUST SHIELD | CACHE POUSSIERE<br>PARAPOLVERE* | STAUBDECKEL<br>PLACA ANTIPOLVO |
| 39 | YM2502-360 | 1 1/2"-13 X 4 | **2** | CAPSCREW | VIS BOUCHON<br>TAPPO A VITE | HUTSCHRAUBE<br>TORNILLO TAPON |
| 40 | 704858 | 1 1/2"-13 | **2** | LOCKNUT | ECROU FREIN<br>AUTOBLOCCANTE | SICHERUNGSMUTTER<br>CONTRATUERCA |
| 41 | YM2570-762 | 1 | **2** | FLANGE | FLASQUE<br>FLANGIA | FLANSCH<br>PLETINA |
| 42* | 364246X1 | 1 1/2"-13 X 1-1/2 | **8** | BOLT UNC | BOULON UNC<br>BULLONE UNC | MASCH.SCHRB.UNC<br>PERNO UNC |
| 43 | YM2995-303 | 1 | **2** | SPACER | ENTRETOISE<br>DISTANZIALE | ABSTANDSTUECK<br>DISCO ESPACIADOR |
| 44 | YM2533-110 | 1 1/4"-28 | **3** | UNION | RACCORD<br>RACCORDO | VERSCHRAUBUNG<br>RACOR |

| | | |
|---|---|---|
| **Single Disc**<br>**Simple Disque**<br>**Einzeltellerraeder**<br>**Simplice Disco**<br>**Simple Disco** | **110-10** | **For Dry Fertilizer**<br>**Pour Engrais Sec**<br>**Fur Trockenes Dünger**<br>**Per Concimi Secco**<br>**Para Abono Seco** |

5-PL62-001-B

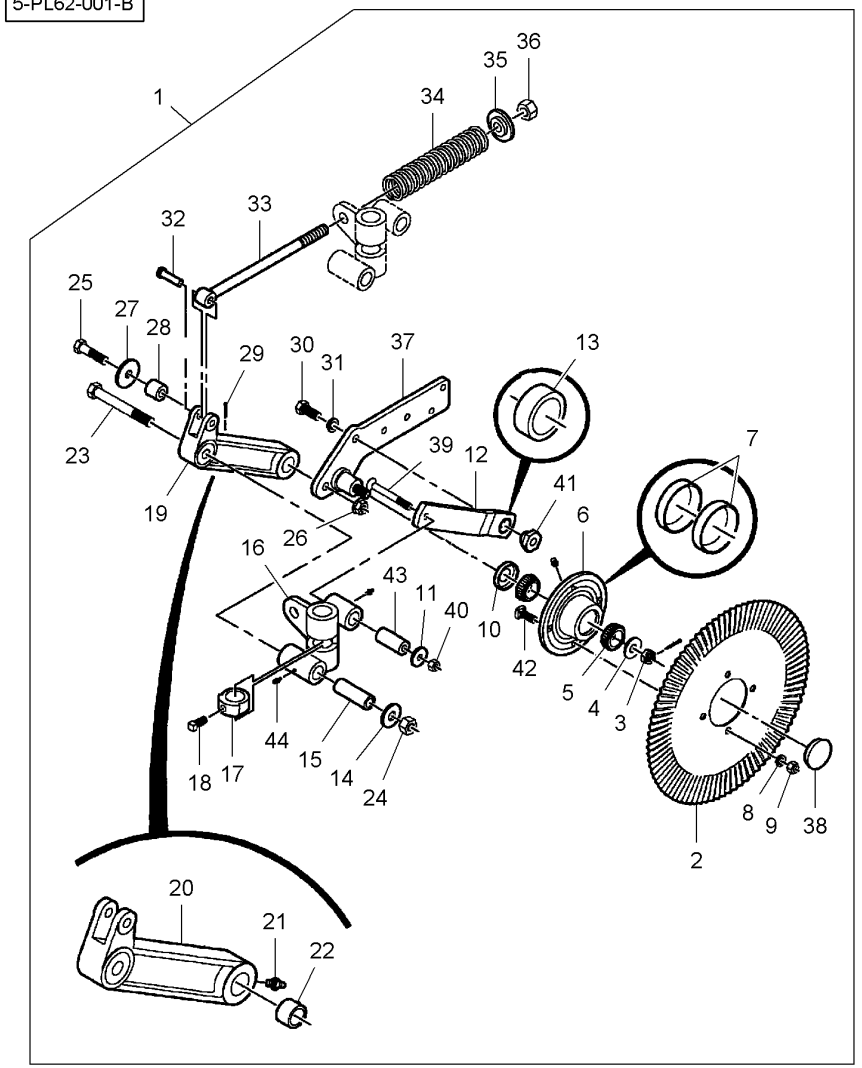


[A] WITH SLASHER BLADE
AVEC LAME A DENTS
MIT SÄGEBLATT
CON LAMA A DENTI
CON CUCHILLA CORTADOR

[B] WITH 25 FLUTE BLADE
AVEC DISQUE 25 RAINURES
MIT 25 RIPPES SCHEIBE
CON DISCO 25 SCANALATURAS
CON DISCO 25 ESTRIAS

[C] WITH NOTCHED BLADE
AVEC DISQUE CRENELE
MIT GEZACKTE-SCHEIBE
CON DISCO DENTELLATO
CON DISCO ESCOTADO

**Single Disc**
**Simple Disque**
**Einzeltellerraeder**
**Simplice Disco**
**Simple Disco**

# 110-15

**For Dry Fertilizer**
**Pour Engrais Sec**
**Fur Trockenes Dünger**
**Per Concimi Secco**
**Para Abono Seco**

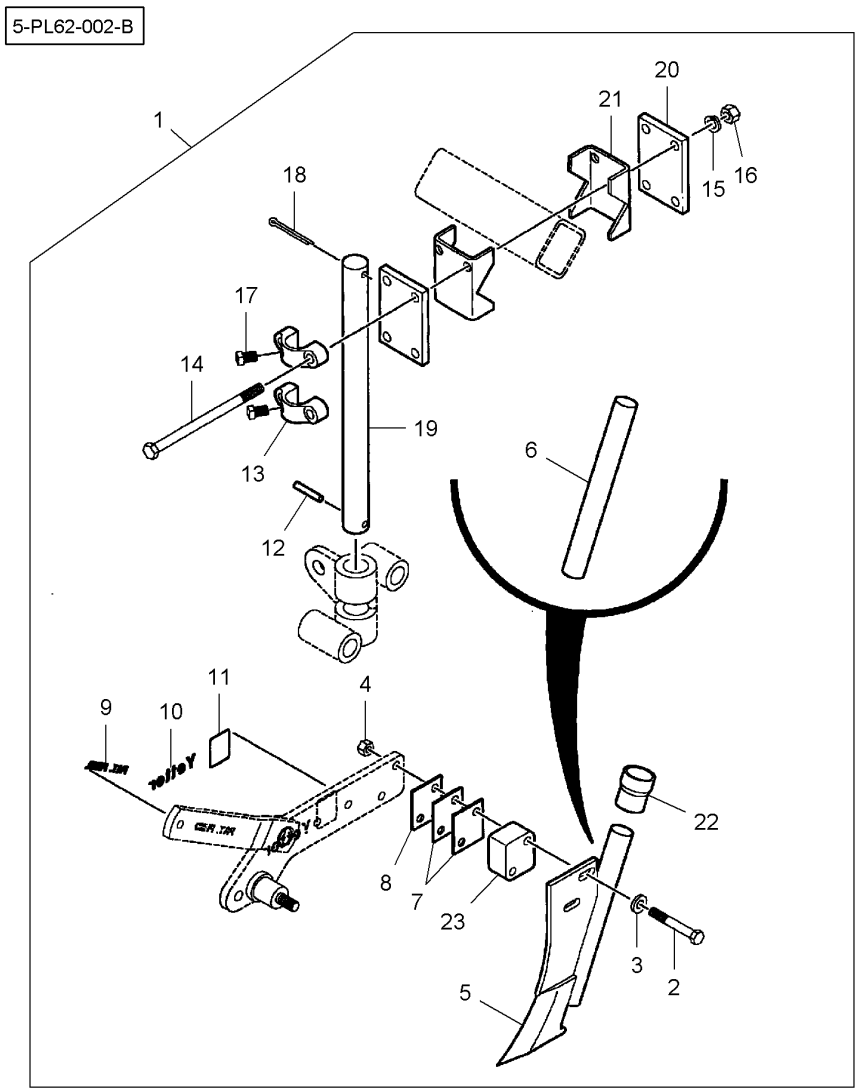


| | | | | | | |
|---|---|---|---|---|---|---|
| 1 | 6000356 | [A] 110-10 No 1 | 1 | KIT, ATTACHMENT | JEU ACCESSOIRES<br>KIT ACCESSORI | SATZ ANBAUTEILE<br>JUEGO ACCESORIO |
| 1 | 6000535 | [B] 110-10 No 1 | 1 | KIT, ATTACHMENT | JEU ACCESSOIRES<br>KIT ACCESSORI | SATZ ANBAUTEILE<br>JUEGO ACCESORIO |
| 2 | 70920990 | 1 1/2"-13 X 3-1/2 | 4 | BOLT UNC | BOULON UNC<br>BULLONE UNC | MASCH.SCHRB.UNC<br>PERNO UNC |
| 3 | YM2526-355 | 1 1/2" | 4 | WASHER | RONDELLE<br>RONDELLA | SCHEIBE<br>ARANDELA |
| 4 | YM2520-362 | 1 1/2"-13 | 4 | LOCKNUT | ECROU FREIN<br>AUTOBLOCCANTE | SICHERUNGSMUTTER<br>CONTRATUERCA |
| 5 | 852912 | 1 | 2 | KNIFE | COUTEAU<br>COLTELLO | MESSER<br>CUCHILLA |
| 6 | 853881 | 5 | 1 | TUBE | TUBE<br>TUBO. | ROHR<br>TUBO. |
| 7 | YM2970-319 | 1 | 4 | SHIM | CALE REGLAGE<br>SPESSORE | AUSGLEICHSCHEIBE<br>CALCE |
| 8 | YM2970-320 | 1 | 2 | SHIM | CALE REGLAGE<br>SPESSORE | AUSGLEICHSCHEIBE<br>CALCE |
| 9 | YM2565-071 | 1 | 2 | DECAL | DECALCOMANIE<br>DECALCOMANIA | AUFKLEBER<br>CALCOMANIA |
| 10 | YM2565-162 | 1 | 2 | DECAL | DECALCOMANIE<br>DECALCOMANIA | AUFKLEBER<br>CALCOMANIA |
| 11 | YM2565-294 | 1 | 2 | DECAL | DECALCOMANIE<br>DECALCOMANIA | AUFKLEBER<br>CALCOMANIA |
| 12 | YM2530-208 | 1 3/8" X 2-1/2 | 2 | PIN | GOUPILLE<br>COPPIGLIA | STIFT<br>PASADOR |
| 13 | YM2990-360 | 1 | 4 | CLAMP | COLLIER<br>FASCETTA | HALTESCHELLE<br>ABRAZADERA |
| 14 | 368410X1 | 1 1/2"-13 X 8 | 8 | BOLT UNC | BOULON UNC<br>BULLONE UNC | MASCH.SCHRB.UNC<br>PERNO UNC |
| 15* | Y705046 | 1 1/2" | 8 | LOCK WASHER | RONDELLE FREIN<br>RONDELLA ARRESTO | SICHERUNGSRING<br>ARANDELA SEGURID |
| 16 | 375098X1 | 1 1/2"-13 | 8 | NUT UNC | ECROU UNC<br>DADO UNC | MUTTER UNC<br>TUERCA UNC |
| 17 | YM2503-379 | 1 5/8"-11 X 1 | 4 | SCREW | VIS<br>VITE | SCHRAUBE<br>TORNILLO |
| 18 | YM2531-161 | 1 5/16" X 2-1/2 | 2 | PIN | GOUPILLE<br>COPPIGLIA | STIFT<br>PASADOR |
| 19 | YM3010-303 | 1 | 2 | SHANK | ANGLE<br>FUSO | SCHAFT<br>MANGO. |
| 20 | YM2990-314 | 1 | 4 | CLAMP | COLLIER<br>FASCETTA | HALTESCHELLE<br>ABRAZADERA |
| 21 | YM2970-326 | 1 | 4 | ADAPTOR | ADAPTATEUR<br>ADATTATORE | REDUZIERNIPPEL<br>ADAPTADOR |
| 22 | YM2515-547 | 1 | 2 | SPOUT | GOULOTTE<br>CONDOTTO. | TUELLE<br>TUBO SALIDA |
| 23 | YM2995-309 | 1 | 2 | BLOCK | BLOC<br>TASSELLO | BLOCK<br>BLOQUE |

| | | |
|---|---|---|
| **Single Disc**<br>**Simple Disque**<br>**Einzeltellerraeder**<br>**Simplice Disco**<br>**Simple Disco** | **110-15** | **For Dry Fertilizer**<br>**Pour Engrais Sec**<br>**Fur Trockenes Dünger**<br>**Per Concimi Secco**<br>**Para Abono Seco** |

5-PL62-002-B

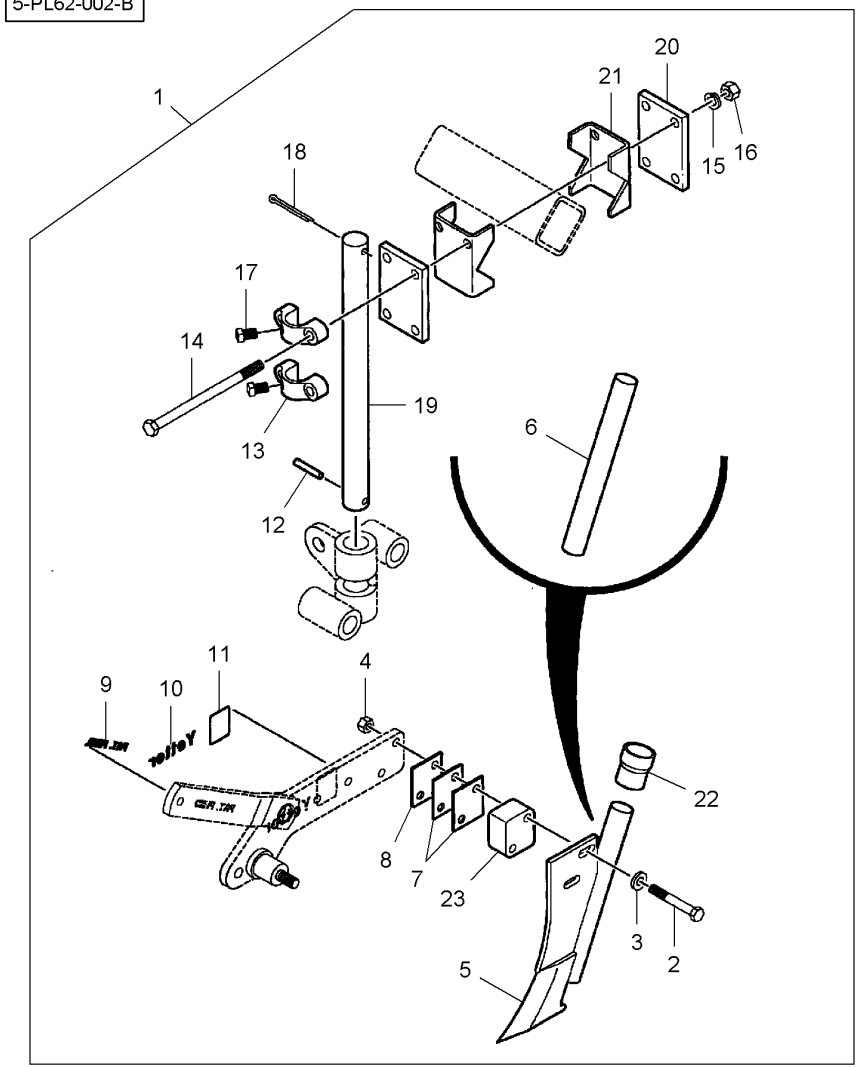


[A] WITH SLASHER BLADE
AVEC LAME A DENTS
MIT SÄGEBLATT
CON LAMA A DENTI
CON CUCHILLA CORTADOR

[B] WITH 25 FLUTE BLADE
AVEC DISQUE 25 RAINURES
MIT 25 RIPPES SCHEIBE
CON DISCO 25 SCANALATURAS
CON DISCO 25 ESTRIAS

**Single Disc**
**Simple Disque**
**Einzeltellerraeder**
**Simplice Disco**
**Simple Disco**

# 110-20

**For Dry Fertilizer**
**Pour Engrais Sec**
**Fur Trockenes Dünger**
**Per Concimi Secco**
**Para Abono Seco**

5-PL62-003-B

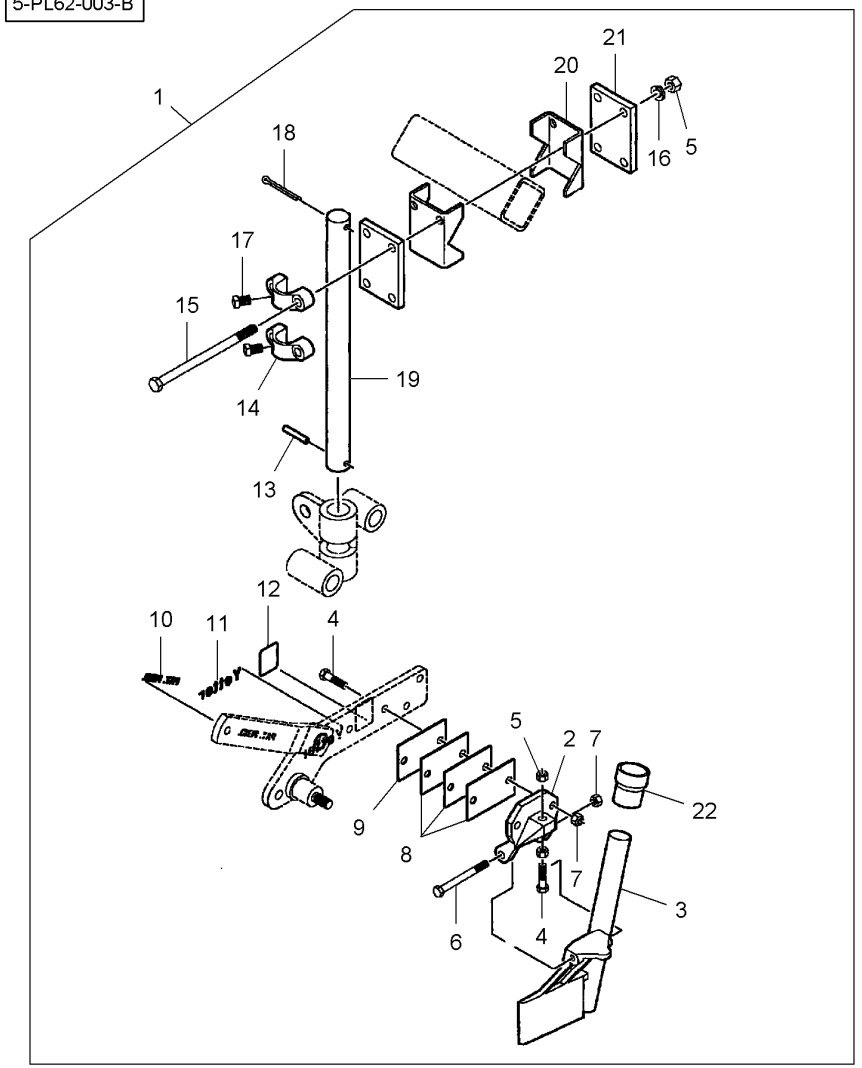


| | | | | | | |
|---|---|---|---|---|---|---|
| 1 | 6000526 | [A] 110-10 No 1 | **1** | KIT, ATTACHMENT | JEU ACCESSOIRES<br>KIT ACCESSORI | SATZ ANBAUTEILE<br>JUEGO ACCESORIO |
| 2 | YM2995-314 | 1 | **2** | BRACKET | SUPPORT FIXATION<br>STAFFETTA | HALTEARM<br>SOPORTE |
| 3 | YM2995-200 | 1 ◀ | **1** | BLADE | LAME<br>LAMA | KLINGE<br>HOJA CORTANTE |
| 3 | YM2995-201 | 1 ▶ | **1** | BLADE | LAME<br>LAMA | KLINGE<br>HOJA CORTANTE |
| 4 | 70921024 | 1 1/2"-13 X 2 | **6** | BOLT UNC | BOULON UNC<br>BULLONE UNC | MASCH.SCHRB.UNC<br>PERNO UNC |
| 5 | 375098X1 | 1 1/2"-13 | **12** | NUT UNC | ECROU UNC<br>DADO UNC | MUTTER UNC<br>TUERCA UNC |
| 6 | 70925705 | 1 1/2"-13 X 5 | **2** | CAPSCREW | VIS BOUCHON<br>TAPPO A VITE | HUTSCHRAUBE<br>TORNILLO TAPON |
| 7 | 704858 | 1 1/2"-13 | **6** | LOCKNUT | ECROU FREIN<br>AUTOBLOCCANTE | SICHERUNGSMUTTER<br>CONTRATUERCA |
| 8 | YM2995-315 | 1 | **6** | SHIM | CALE REGLAGE<br>SPESSORE | AUSGLEICHSCHEIBE<br>CALCE |
| 9 | YM2995-316 | 1 | **2** | SHIM | CALE REGLAGE<br>SPESSORE | AUSGLEICHSCHEIBE<br>CALCE |
| 10 | YM2565-071 | 1 | **2** | DECAL | DECALCOMANIE<br>DECALCOMANIA | AUFKLEBER<br>CALCOMANIA |
| 11 | YM2565-162 | 1 | **2** | DECAL | DECALCOMANIE<br>DECALCOMANIA | AUFKLEBER<br>CALCOMANIA |
| 12 | YM2565-294 | 1 | **2** | DECAL | DECALCOMANIE<br>DECALCOMANIA | AUFKLEBER<br>CALCOMANIA |
| 13 | YM2530-208 | 1 3/8" X 2-1/2 | **2** | PIN | GOUPILLE<br>COPPIGLIA | STIFT<br>PASADOR |
| 14 | YM2990-360 | 1 | **4** | CLAMP | COLLIER<br>FASCETTA | HALTESCHELLE<br>ABRAZADERA |
| 15 | 368410X1 | 1 1/2"-13 X 8 | **8** | BOLT UNC | BOULON UNC<br>BULLONE UNC | MASCH.SCHRB.UNC<br>PERNO UNC |
| 16* | Y705046 | 1 1/2" | **8** | LOCK WASHER | RONDELLE FREIN<br>RONDELLA ARRESTO | SICHERUNGSRING<br>ARANDELA SEGURID |
| 17 | YM2503-379 | 1 5/8"-11 X 1 | **4** | SCREW | VIS<br>VITE | SCHRAUBE<br>TORNILLO |
| 18 | YM2531-161 | 1 5/16" X 2-1/2 | **2** | PIN | GOUPILLE<br>COPPIGLIA | STIFT<br>PASADOR |
| 19 | YM3010-303 | 1 | **2** | SHANK | ANGLE<br>FUSO | SCHAFT<br>MANGO. |
| 20 | YM2970-326 | 1 | **4** | ADAPTOR | ADAPTATEUR<br>ADATTATORE | REDUZIERNIPPEL<br>ADAPTADOR |
| 21 | YM2990-314 | 1 | **4** | CLAMP | COLLIER<br>FASCETTA | HALTESCHELLE<br>ABRAZADERA |
| 22 | YM2515-547 | 1 | **2** | SPOUT | GOULOTTE<br>CONDOTTO. | TUELLE<br>TUBO SALIDA |

[A] WITH NOTCHED BLADE
AVEC DISQUE CRENELE
MIT GEZACKTE-SCHEIBE
CON DISCO DENTELLATO
CON DISCO ESCOTADO

**Single Disc**
**Simple Disque**
**Einzeltellerraeder**
**Simplice Disco**
**Simple Disco**

# 110-25

**For Liquid Fertilizer**
**Pour Engrais Liquide**
**Fur Flüssiger Dünger**
**Per Concimi Liquido**
**Para Abono Liquido**

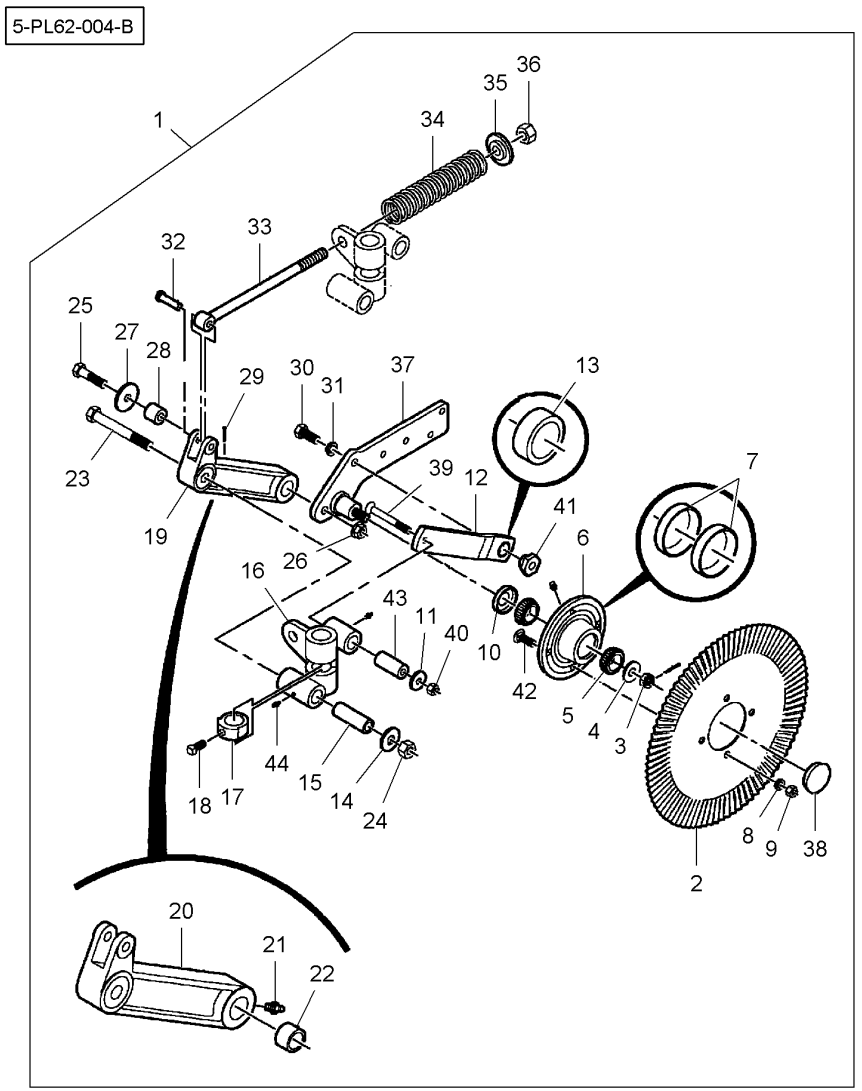


| | | | | | | |
|---|---|---|---|---|---|---|
| 1 | 6000534 | [A] 110-30 No 1 | 1 | KIT, ATTACHMENT | JEU ACCESSOIRES<br>KIT ACCESSORI | SATZ ANBAUTEILE<br>JUEGO ACCESORIO |
| 1 | 6000355 | [B] 110-30 No 1 | 1 | KIT, ATTACHMENT | JEU ACCESSOIRES<br>KIT ACCESSORI | SATZ ANBAUTEILE<br>JUEGO ACCESORIO |
| 1 | 6000527 | [C] 110-35 No 1 | 1 | KIT, ATTACHMENT | JEU ACCESSOIRES<br>KIT ACCESSORI | SATZ ANBAUTEILE<br>JUEGO ACCESORIO |
| 1 | 6000525 | [AD] 110-40 No 1 | 1 | KIT, ATTACHMENT | JEU ACCESSOIRES<br>KIT ACCESSORI | SATZ ANBAUTEILE<br>JUEGO ACCESORIO |
| 2 | YM2571-179 | 1 [A] | 2 | DISC | DISQUE<br>DISCO | SCHEIBE<br>DISCO |
| 2 | 852891 | 1 [B] | 2 | DISC | DISQUE<br>DISCO | SCHEIBE<br>DISCO |
| 2 | YM2571-165 | 1 [C] | 2 | DISC | DISQUE<br>DISCO | SCHEIBE<br>DISCO |
| 3 | YM2520-469 | 1 5/8"-18 | 2 | NUT | ECROU<br>DADO | MUTTER<br>TUERCA |
| 4 | YM2526-449 | 1 5/8" | 2 | WASHER | RONDELLE<br>RONDELLA | SCHEIBE<br>ARANDELA |
| 5 | YM2550-027 | 1 | 4 | BEARING CONE | CONE ROULEMENT<br>CONO CUSCINETTO | LAGERINNENRING<br>CONO COJINETE |
| 6 | YM2900-105 | 1 | 2 | HUB | MOYEU<br>MOZZO | NABE<br>CUBO |
| 7 | YM2550-029 | 6 | 2 | BEARING CUP | CUVETTE ROULEMNT<br>COPPA CUSCINETTO | LAGERAUSSENRING<br>ANILLO COJINETE |
| 8* | 353439X1 | 1 1/2" | 8 | LOCK WASHER | RONDELLE FREIN<br>RONDELLA ARRESTO | SICHERUNGSRING<br>ARANDELA SEGURID |
| 9 | 375098X1 | 1 1/2"-13 | 8 | NUT UNC | ECROU UNC<br>DADO UNC | MUTTER UNC<br>TUERCA UNC |
| 10 | YM2550-115 | 1 | 2 | SEAL | JOINT ETANCHEITE<br>GIUNTO ROTONDO | DICHTRING<br>JUNTA REDONDA |
| 11 | YM2527-340 | 1 | 2 | WASHER | RONDELLE<br>RONDELLA | SCHEIBE<br>ARANDELA |
| 12 | YM2995-111 | 1 | 2 | ARM | BRAS<br>BRACCIO | SCHARHEBEL<br>BRAZO |
| 13 | YM2528-360 | 12 | 1 | BUSH | BAGUE<br>BOCCOLA | RING<br>CASQUILLO |
| 14 | YM2527-532 | 1 | 2 | WASHER | RONDELLE<br>RONDELLA | SCHEIBE<br>ARANDELA |
| 15 | YM2570-704 | 1 | 2 | SLEEVE | MANCHON<br>MANICOTTO | HUELSE<br>MANGUITO |
| 16 | YM2995-306 | 1 ◀ | 1 | KNUCKLE | NOIX<br>ARTICOLAZIONE | GELENK<br>CHARNELA. |
| 16 | YM2995-307 | 1 ▶ | 1 | KNUCKLE | NOIX<br>ARTICOLAZIONE | GELENK<br>CHARNELA. |
| 17 | YM2975-303 | 1 | 2 | COLLAR | COLLERETTE<br>COLLARE | KRAGEN<br>COLLARIN |
| 18 | YM2503-379 | 1 5/8"-11 X 1 | 2 | SCREW | VIS<br>VITE | SCHRAUBE<br>TORNILLO |
| 19 | YM2995-110 | 1 | 2 | ARM | BRAS<br>BRACCIO | SCHARHEBEL<br>BRAZO |
| 20 | YM2555-095 | 19 | 1 | ARM | BRAS<br>BRACCIO | SCHARHEBEL<br>BRAZO |

**Single Disc**
**Simple Disque**
**Einzeltellerraeder**
**Simplice Disco**
**Simple Disco**

# 110-25

**For Liquid Fertilizer**
**Pour Engrais Liquide**
**Fur Flüssiger Dünger**
**Per Concimi Liquido**
**Para Abono Liquido**

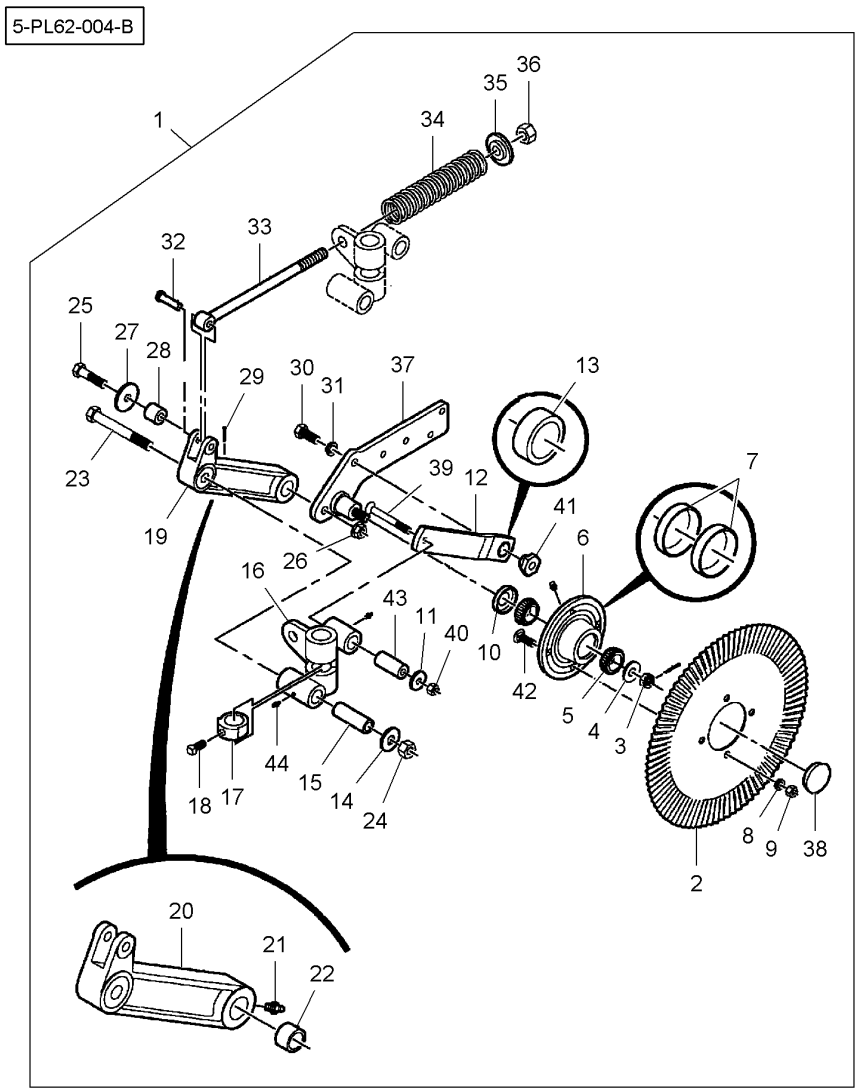


| | | | | | | |
|---|---|---|---|---|---|---|
| 21 | YM2533-110 | 19 | 1/4"-28 | **1** | UNION | RACCORD<br>RACCORDO | VERSCHRAUBUNG<br>RACOR |
| 22 | YM2528-362 | 19 | | **1** | BUSH | BAGUE<br>BOCCOLA | RING<br>CASQUILLO |
| 23 | 7701535 | 1 | 3/4"-10 X 6 | **2** | BOLT | BOULON<br>BULLONE | BOLZEN<br>BULON |
| 24 | Y704718 | 1 | 3/4"-10 | **2** | LOCKNUT | ECROU FREIN<br>AUTOBLOCCANTE | SICHERUNGSMUTTER<br>CONTRATUERCA |
| 25 | 353729X1 | 1 | 5/8"-11 X 2-1/2 | **2** | BOLT UNC | BOULON UNC<br>BULLONE UNC | MASCH.SCHRB.UNC<br>PERNO UNC |
| 26 | 7774458 | 1 | 5/8"-11 | **2** | NUT | ECROU<br>DADO | MUTTER<br>TUERCA |
| 27 | YM2527-529 | 1 | | **2** | WASHER | RONDELLE<br>RONDELLA | SCHEIBE<br>ARANDELA |
| 28 | YM2570-761 | 1 | | **2** | BUSH | BAGUE<br>BOCCOLA | RING<br>CASQUILLO |
| 29 | 354061X1 | 1 | 1/8" X 1-1/4 | **4** | PIN | GOUPILLE<br>COPPIGLIA | STIFT<br>PASADOR |
| 30 | YM2502-339 | 1 | 5/8"-18 X 1-1/2 | **2** | SCREW | VIS<br>VITE | SCHRAUBE<br>TORNILLO |
| 31 | 353433X1 | 1 | 5/8" | **2** | LOCK WASHER | RONDELLE FREIN<br>RONDELLA ARRESTO | SICHERUNGSRING<br>ARANDELA SEGURID |
| 32 | YM2995-308 | 1 | | **2** | PIN | GOUPILLE<br>COPPIGLIA | STIFT<br>PASADOR |
| 33 | YM2995-304 | 1 | | **2** | ROD | TRINGLE<br>ASTA | STANGE<br>VARILLA |
| 34 | YM2550-795 | 1 | | **2** | SPRING | RESSORT<br>MOLLA | FEDER<br>MUELLE |
| 35 | YM2555-096 | 1 | | **2** | BUSH | BAGUE<br>BOCCOLA | RING<br>CASQUILLO |
| 36 | YM2520-515 | 1 | 3/4"-10 | **2** | NUT | ECROU<br>DADO | MUTTER<br>TUERCA |
| 37 | YM2995-206 | 1 | ◀ | **1** | EXTENSION | RALLONGE<br>PROLUNGA | VERLAENGERUNG<br>ENSANCHE |
| 37 | YM2995-207 | 1 | ▶ | **1** | EXTENSION | RALLONGE<br>PROLUNGA | VERLAENGERUNG<br>ENSANCHE |
| 38 | YM2570-375 | 1 | | **2** | DUST SHIELD | CACHE POUSSIERE<br>PARAPOLVERE* | STAUBDECKEL<br>PLACA ANTIPOLVO |
| 39 | YM2502-360 | 1 | 1/2"-13 X 4 | **2** | CAPSCREW | VIS BOUCHON<br>TAPPO A VITE | HUTSCHRAUBE<br>TORNILLO TAPON |
| 40 | 704858 | 1 | 1/2"-13 | **2** | LOCKNUT | ECROU FREIN<br>AUTOBLOCCANTE | SICHERUNGSMUTTER<br>CONTRATUERCA |
| 41 | YM2570-762 | 1 | | **2** | FLANGE | FLASQUE<br>FLANGIA | FLANSCH<br>PLETINA |
| 42* | 364246X1 | 1 | 1/2"-13 X 1-1/2 | **8** | BOLT UNC | BOULON UNC<br>BULLONE UNC | MASCH.SCHRB.UNC<br>PERNO UNC |
| 43 | YM2995-303 | 1 | | **2** | SPACER | ENTRETOISE<br>DISTANZIALE | ABSTANDSTUECK<br>DISCO ESPACIADOR |
| 44 | YM2533-110 | 1 | 1/4"-28 | **3** | UNION | RACCORD<br>RACCORDO | VERSCHRAUBUNG<br>RACOR |

| | | |
|---|---|---|
| **Single Disc**<br>**Simple Disque**<br>**Einzeltellerraeder**<br>**Simplice Disco**<br>**Simple Disco** | **110-25** | **For Liquid Fertilizer**<br>**Pour Engrais Liquide**<br>**Fur Flüssiger Dünger**<br>**Per Concimi Liquido**<br>**Para Abono Liquido** |

5-PL62-004-B

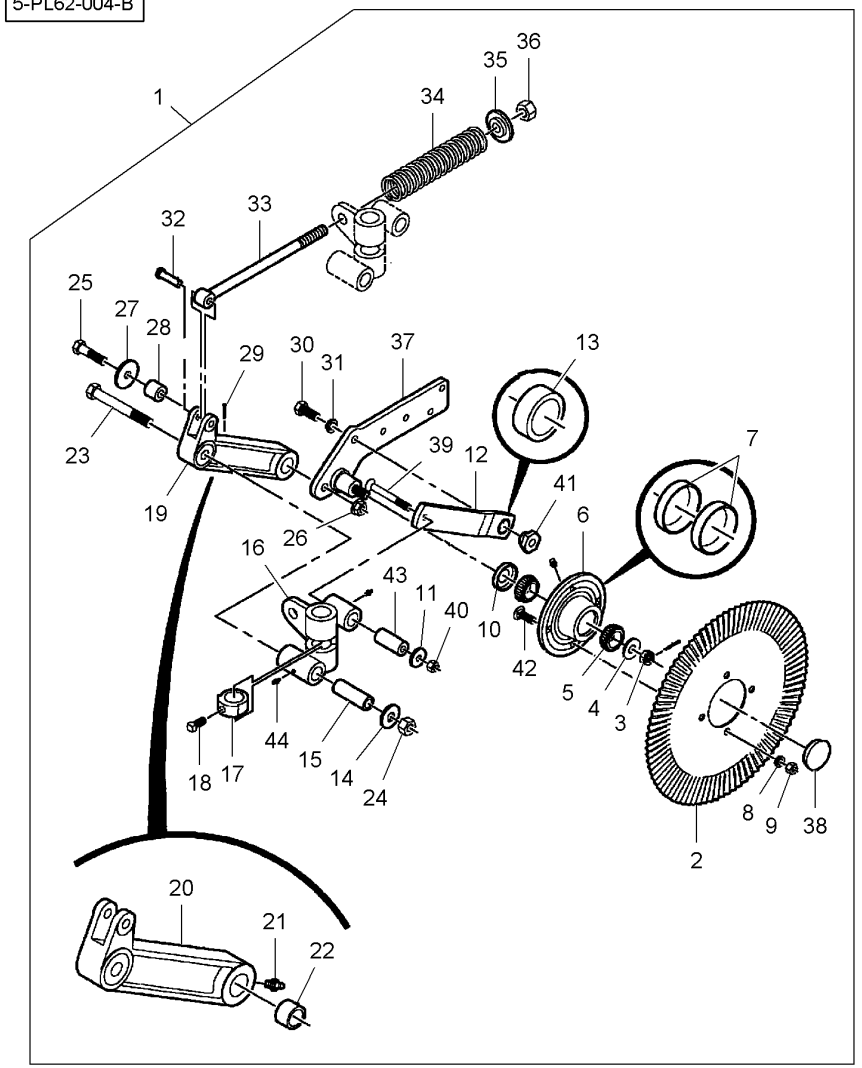


[A] WITH 25 FLUTE BLADE
AVEC DISQUE 25 RAINURES
MIT 25 RIPPES SCHEIBE
CON DISCO 25 SCANALATURAS
CON DISCO 25 ESTRIAS

[B] WITH SLASHER BLADE
AVEC LAME A DENTS
MIT SÄGEBLATT
CON LAMA A DENTI
CON CUCHILLA CORTADOR

[C] WITH NOTCHED BLADE
AVEC DISQUE CRENELE
MIT GEZACKTE-SCHEIBE
CON DISCO DENTELLATO
CON DISCO ESCOTADO

[D] WITH INJECTOR
AVEC ATOMISEUR
MIT EINSPRITZDUESE
CON INIETTORE COMPLT
CON INYECTOR

**Single Disc**
**Simple Disque**
**Einzeltellerraeder**
**Simplice Disco**
**Simple Disco**

# 110-30

**For Liquid Fertilizer**
**Pour Engrais Liquide**
**Fur Flüssiger Dünger**
**Per Concimi Liquido**
**Para Abono Liquido**

5-PL62-005-B

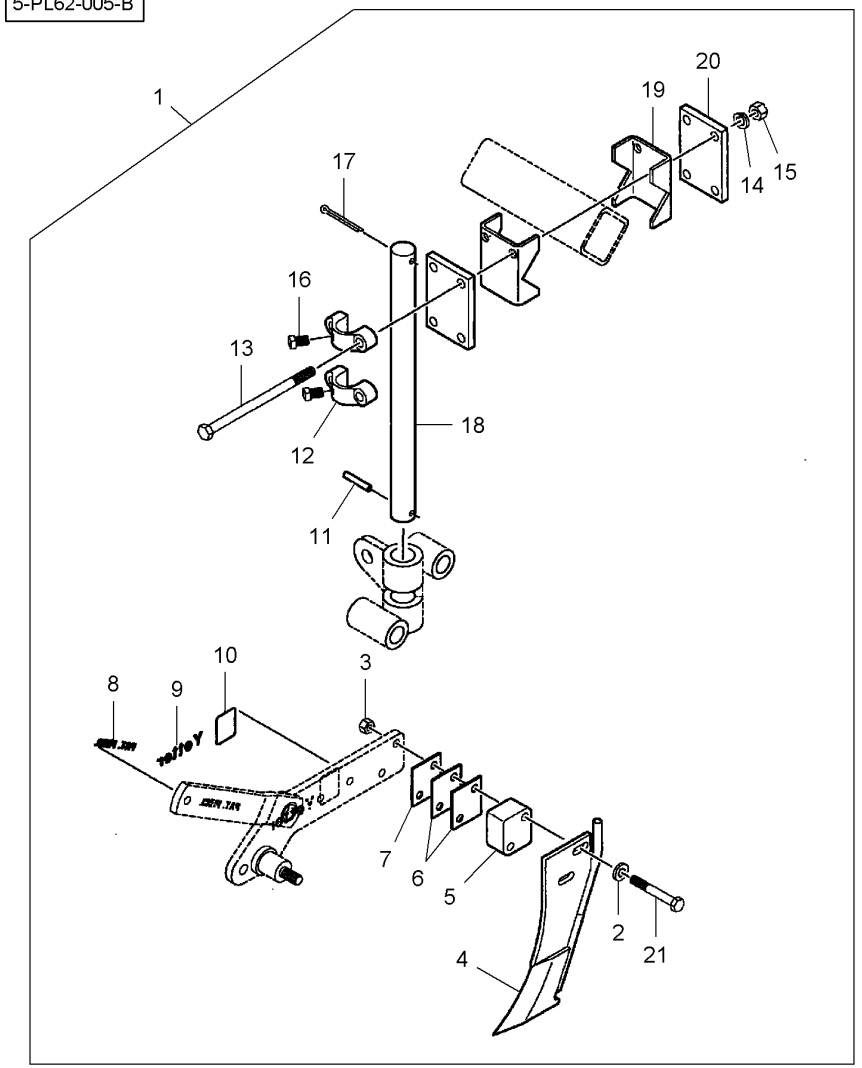


| | | | | | | |
|---|---|---|---|---|---|---|
| 1 | 6000534 | [A] 110-25 No 1 | 1 | KIT, ATTACHMENT | JEU ACCESSOIRES<br>KIT ACCESSORI | SATZ ANBAUTEILE<br>JUEGO ACCESORIO |
| 1 | 6000355 | [B] 110-25 No 1 | 1 | KIT, ATTACHMENT | JEU ACCESSOIRES<br>KIT ACCESSORI | SATZ ANBAUTEILE<br>JUEGO ACCESORIO |
| 2 | YM2526-355 | 1 1/2" | 4 | WASHER | RONDELLE<br>RONDELLA | SCHEIBE<br>ARANDELA |
| 3 | YM2520-362 | 1 1/2"-13 | 4 | LOCKNUT | ECROU FREIN<br>AUTOBLOCCANTE | SICHERUNGSMUTTER<br>CONTRATUERCA |
| 4 | YM2975-220 | 1 | 2 | KNIFE | COUTEAU<br>COLTELLO | MESSER<br>CUCHILLA |
| 5 | YM2995-309 | 1 | 2 | BLOCK | BLOC<br>TASSELLO | BLOCK<br>BLOQUE |
| 6 | YM2970-319 | 1 | 4 | SHIM | CALE REGLAGE<br>SPESSORE | AUSGLEICHSCHEIBE<br>CALCE |
| 7 | YM2970-320 | 1 | 2 | SHIM | CALE REGLAGE<br>SPESSORE | AUSGLEICHSCHEIBE<br>CALCE |
| 8 | YM2565-071 | 1 | 2 | DECAL | DECALCOMANIE<br>DECALCOMANIA | AUFKLEBER<br>CALCOMANIA |
| 9 | YM2565-162 | 1 | 2 | DECAL | DECALCOMANIE<br>DECALCOMANIA | AUFKLEBER<br>CALCOMANIA |
| 10 | YM2565-294 | 1 | 2 | DECAL | DECALCOMANIE<br>DECALCOMANIA | AUFKLEBER<br>CALCOMANIA |
| 11 | YM2530-208 | 1 3/8" X 2-1/2 | 2 | PIN | GOUPILLE<br>COPPIGLIA | STIFT<br>PASADOR |
| 12 | YM2990-360 | 1 | 4 | CLAMP | COLLIER<br>FASCETTA | HALTESCHELLE<br>ABRAZADERA |
| 13 | 368410X1 | 1 1/2"-13 X 8 | 8 | BOLT UNC | BOULON UNC<br>BULLONE UNC | MASCH.SCHRB.UNC<br>PERNO UNC |
| 14* | Y705046 | 1 1/2" | 8 | LOCK WASHER | RONDELLE FREIN<br>RONDELLA ARRESTO | SICHERUNGSRING<br>ARANDELA SEGURID |
| 15 | 375098X1 | 1 1/2"-13 | 8 | NUT UNC | ECROU UNC<br>DADO UNC | MUTTER UNC<br>TUERCA UNC |
| 16 | YM2503-379 | 1 5/8"-11 X 1 | 4 | SCREW | VIS<br>VITE | SCHRAUBE<br>TORNILLO |
| 17 | YM2531-161 | 1 5/16" X 2-1/2 | 2 | PIN | GOUPILLE<br>COPPIGLIA | STIFT<br>PASADOR |
| 18 | YM3010-303 | 1 | 2 | SHANK | ANGLE<br>FUSO | SCHAFT<br>MANGO. |
| 19 | YM2970-326 | 1 | 4 | ADAPTOR | ADAPTATEUR<br>ADATTATORE | REDUZIERNIPPEL<br>ADAPTADOR |
| 20 | YM2990-314 | 1 | 4 | CLAMP | COLLIER<br>FASCETTA | HALTESCHELLE<br>ABRAZADERA |
| 21 | 70920990 | 1 1/2"-13 X 3-1/2 | 4 | BOLT UNC | BOULON UNC<br>BULLONE UNC | MASCH.SCHRB.UNC<br>PERNO UNC |

[A] WITH 25 FLUTE BLADE
AVEC DISQUE 25 RAINURES
MIT 25 RIPPES SCHEIBE
CON DISCO 25 SCANALATURAS
CON DISCO 25 ESTRIAS

| | | |
|---|---|---|
| **Single Disc**<br>**Simple Disque**<br>**Einzeltellerraeder**<br>**Simplice Disco**<br>**Simple Disco** | **110-30** | **For Liquid Fertilizer**<br>**Pour Engrais Liquide**<br>**Fur Flüssiger Dünger**<br>**Per Concimi Liquido**<br>**Para Abono Liquido** |

5-PL62-005-B

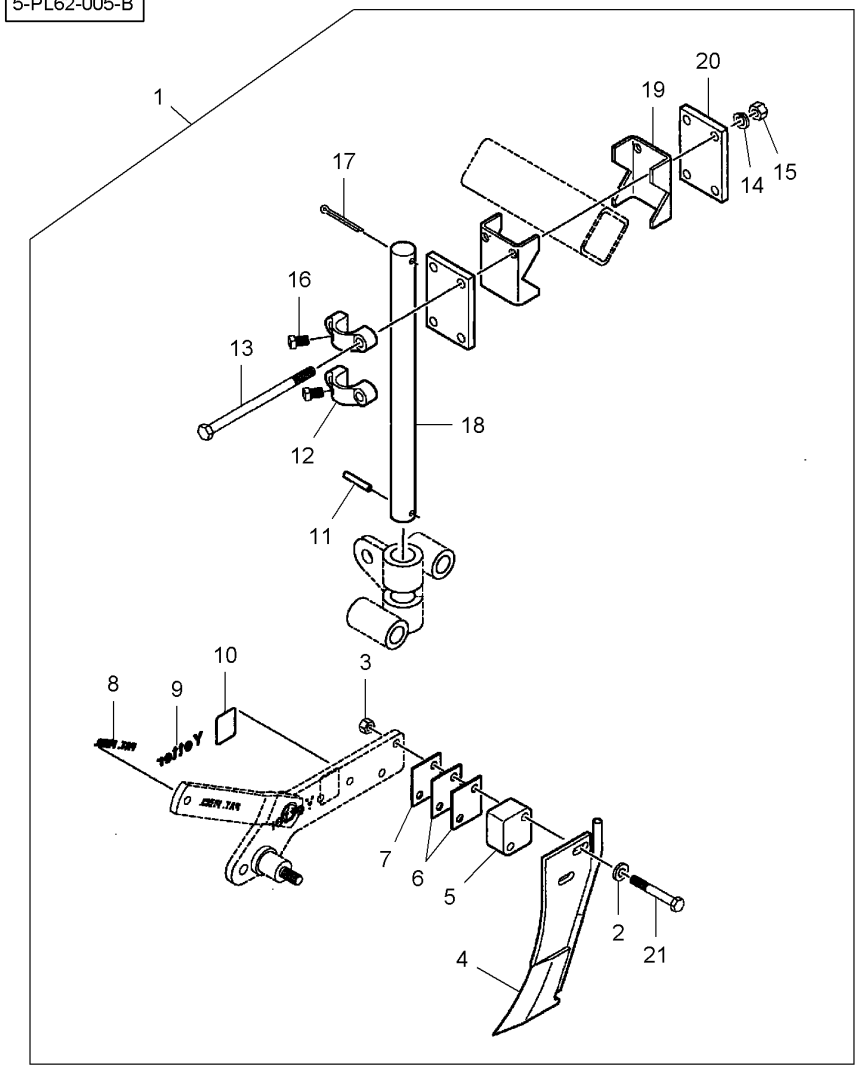


[B] WITH SLASHER BLADE
AVEC LAME A DENTS
MIT SÄGEBLATT
CON LAMA A DENTI
CON CUCHILLA CORTADOR

**Single Disc**
**Simple Disque**
**Einzeltellerraeder**
**Simplice Disco**
**Simple Disco**

# 110-35

**For Liquid Fertilizer**
**Pour Engrais Liquide**
**Fur Flüssiger Dünger**
**Per Concimi Liquido**
**Para Abono Liquido**

5-PL62-006-B

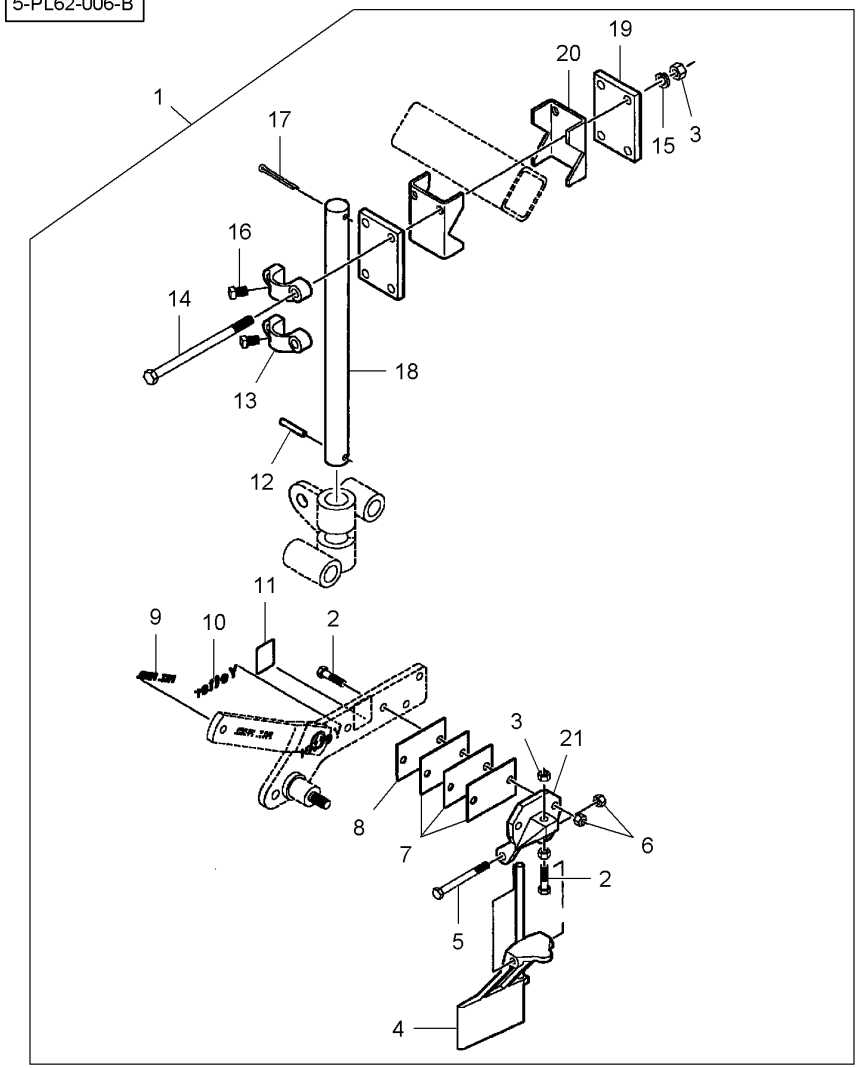


| | | | | | | |
|---|---|---|---|---|---|---|
| 1 | 6000527 | [A] | **1** | KIT, ATTACHMENT | JEU ACCESSOIRES<br>KIT ACCESSORI | SATZ ANBAUTEILE<br>JUEGO ACCESORIO |
| 2 | 70921024 | 1 1/2"-13 X 2 | **3** | BOLT UNC | BOULON UNC<br>BULLONE UNC | MASCH.SCHRB.UNC<br>PERNO UNC |
| 3 | 375098X1 | 1 1/2"-13 | **6** | NUT UNC | ECROU UNC<br>DADO UNC | MUTTER UNC<br>TUERCA UNC |
| 4 | YM2995-120 | 1 ◀ | **1** | KNIFE | COUTEAU<br>COLTELLO | MESSER<br>CUCHILLA |
| 4 | YM2995-121 | 1 ▶ | **1** | KNIFE | COUTEAU<br>COLTELLO | MESSER<br>CUCHILLA |
| 5 | 70925705 | 1 1/2"-13 X 5 | **1** | CAPSCREW | VIS BOUCHON<br>TAPPO A VITE | HUTSCHRAUBE<br>TORNILLO TAPON |
| 6 | 704858 | 1 1/2"-13 | **3** | LOCKNUT | ECROU FREIN<br>AUTOBLOCCANTE | SICHERUNGSMUTTER<br>CONTRATUERCA |
| 7 | YM2995-315 | 1 | **3** | SHIM | CALE REGLAGE<br>SPESSORE | AUSGLEICHSCHEIBE<br>CALCE |
| 8 | YM2995-316 | 1 | **1** | SHIM | CALE REGLAGE<br>SPESSORE | AUSGLEICHSCHEIBE<br>CALCE |
| 9 | YM2565-071 | 1 | **1** | DECAL | DECALCOMANIE<br>DECALCOMANIA | AUFKLEBER<br>CALCOMANIA |
| 10 | YM2565-162 | 1 | **1** | DECAL | DECALCOMANIE<br>DECALCOMANIA | AUFKLEBER<br>CALCOMANIA |
| 11 | YM2565-294 | 1 | **1** | DECAL | DECALCOMANIE<br>DECALCOMANIA | AUFKLEBER<br>CALCOMANIA |
| 12 | YM2530-208 | 1 3/8" X 2-1/2 | **1** | PIN | GOUPILLE<br>COPPIGLIA | STIFT<br>PASADOR |
| 13 | YM2990-360 | 1 | **2** | CLAMP | COLLIER<br>FASCETTA | HALTESCHELLE<br>ABRAZADERA |
| 14 | 368410X1 | 1 1/2"-13 X 8 | **4** | BOLT UNC | BOULON UNC<br>BULLONE UNC | MASCH.SCHRB.UNC<br>PERNO UNC |
| 15* | Y705046 | 1 1/2" | **4** | LOCK WASHER | RONDELLE FREIN<br>RONDELLA ARRESTO | SICHERUNGSRING<br>ARANDELA SEGURID |
| 16 | YM2503-379 | 1 5/8"-11 X 1 | **2** | SCREW | VIS<br>VITE | SCHRAUBE<br>TORNILLO |
| 17 | YM2531-161 | 1 5/16" X 2-1/2 | **1** | PIN | GOUPILLE<br>COPPIGLIA | STIFT<br>PASADOR |
| 18 | YM3010-303 | 1 | **1** | SHANK | ANGLE<br>FUSO | SCHAFT<br>MANGO. |
| 19 | YM2990-314 | 1 | **2** | CLAMP | COLLIER<br>FASCETTA | HALTESCHELLE<br>ABRAZADERA |
| 20 | YM2970-326 | 1 | **2** | ADAPTOR | ADAPTATEUR<br>ADATTATORE | REDUZIERNIPPEL<br>ADAPTADOR |
| 21 | YM2995-314 | 1 | **1** | BRACKET | SUPPORT FIXATION<br>STAFFETTA | HALTEARM<br>SOPORTE |

[A] WITH NOTCHED BLADE
AVEC DISQUE CRENELE
MIT GEZACKTE-SCHEIBE
CON DISCO DENTELLATO
CON DISCO ESCOTADO

**Single Disc**
**Simple Disque**
**Einzeltellerraeder**
**Simplice Disco**
**Simple Disco**

# 110-40

**For Liquid Fertilizer**
**Pour Engrais Liquide**
**Fur Flüssiger Dünger**
**Per Concimi Liquido**
**Para Abono Liquido**

5-PL62-007-B

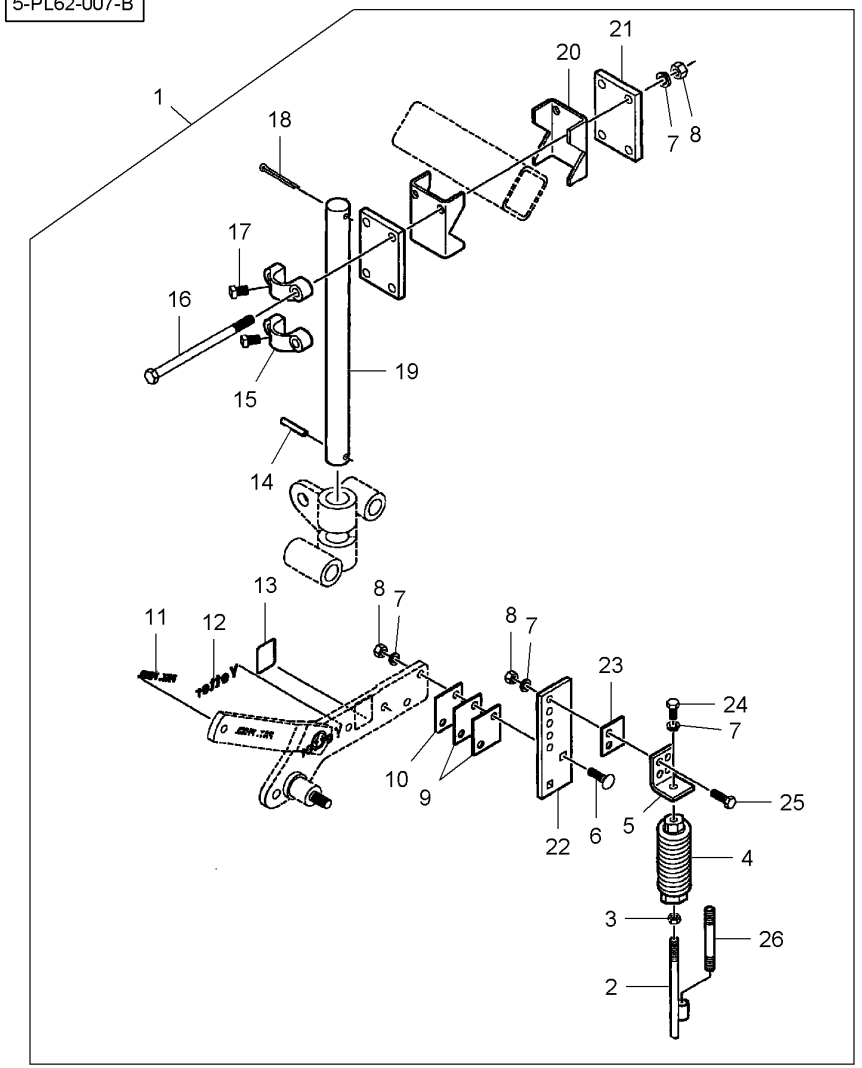


| | | | | | | | |
|---|---|---|---|---|---|---|---|
| 1 | 6000525 | | [AB] | **1** | KIT, ATTACHMENT | JEU ACCESSOIRES<br>KIT ACCESSORI | SATZ ANBAUTEILE<br>JUEGO ACCESORIO |
| 2 | YM2995-212 | 1 | | **2** | ROD | TRINGLE<br>ASTA | STANGE<br>VARILLA |
| 3 | YM2520-356 | 1 | 1/2"-13 | **2** | NUT | ECROU<br>DADO | MUTTER<br>TUERCA |
| 4 | YM2995-131 | 1 | | **2** | SPRING | RESSORT<br>MOLLA | FEDER<br>MUELLE |
| 5 | YM2995-301 | 1 | | **2** | PLATE | PLAQUE<br>PIASTRA | PLATTE<br>PLATO |
| 6 | 70931810 | 1 | 1/2"-13 X 1-3/4 | **4** | BOLT UNC | BOULON UNC<br>BULLONE UNC | MASCH.SCHRB.UNC<br>PERNO UNC |
| 7* | Y705046 | 1 | 1/2" | **18** | LOCK WASHER | RONDELLE FREIN<br>RONDELLA ARRESTO | SICHERUNGSRING<br>ARANDELA SEGURID |
| 8 | 375098X1 | 1 | 1/2"-13 | **16** | NUT UNC | ECROU UNC<br>DADO UNC | MUTTER UNC<br>TUERCA UNC |
| 9 | YM2970-319 | 1 | | **4** | SHIM | CALE REGLAGE<br>SPESSORE | AUSGLEICHSCHEIBE<br>CALCE |
| 10 | YM2970-320 | 1 | | **2** | SHIM | CALE REGLAGE<br>SPESSORE | AUSGLEICHSCHEIBE<br>CALCE |
| 11 | YM2565-071 | 1 | | **2** | DECAL | DECALCOMANIE<br>DECALCOMANIA | AUFKLEBER<br>CALCOMANIA |
| 12 | YM2565-162 | 1 | | **2** | DECAL | DECALCOMANIE<br>DECALCOMANIA | AUFKLEBER<br>CALCOMANIA |
| 13 | YM2565-294 | 1 | | **2** | DECAL | DECALCOMANIE<br>DECALCOMANIA | AUFKLEBER<br>CALCOMANIA |
| 14 | YM2530-208 | 1 | 3/8" X 2-1/2 | **2** | PIN | GOUPILLE<br>COPPIGLIA | STIFT<br>PASADOR |
| 15 | YM2990-360 | 1 | | **4** | CLAMP | COLLIER<br>FASCETTA | HALTESCHELLE<br>ABRAZADERA |
| 16 | 368410X1 | 1 | 1/2"-13 X 8 | **8** | BOLT UNC | BOULON UNC<br>BULLONE UNC | MASCH.SCHRB.UNC<br>PERNO UNC |
| 17 | YM2503-379 | 1 | 5/8"-11 X 1 | **4** | SCREW | VIS<br>VITE | SCHRAUBE<br>TORNILLO |
| 18 | YM2531-161 | 1 | 5/16" X 2-1/2 | **2** | PIN | GOUPILLE<br>COPPIGLIA | STIFT<br>PASADOR |
| 19 | YM3010-303 | 1 | | **2** | SHANK | ANGLE<br>FUSO | SCHAFT<br>MANGO. |
| 20 | YM2970-326 | 1 | | **4** | ADAPTOR | ADAPTATEUR<br>ADATTATORE | REDUZIERNIPPEL<br>ADAPTADOR |
| 21 | YM2990-314 | 1 | | **4** | CLAMP | COLLIER<br>FASCETTA | HALTESCHELLE<br>ABRAZADERA |
| 22 | YM2975-389 | 1 | | **2** | PLATE | PLAQUE<br>PIASTRA | PLATTE<br>PLATO |
| 23 | YM2995-320 | 1 | | **2** | SPACER | ENTRETOISE<br>DISTANZIALE | ABSTANDSTUECK<br>DISCO ESPACIADOR |
| 24 | 353723X1 | 1 | 1/2"-13 X 1 | **2** | BOLT UNC | BOULON UNC<br>BULLONE UNC | MASCH.SCHRB.UNC<br>PERNO UNC |
| 25 | 353724X1 | 1 | 1/2"-13 X 1-1/2 | **4** | BOLT UNC | BOULON UNC<br>BULLONE UNC | MASCH.SCHRB.UNC<br>PERNO UNC |
| 26 | YM2515-311 | 1 | | **2** | GREASE FITTING | GRAISSEUR<br>INGRASSATORE | DRUCKSCHMIERKOPF<br>ENGRASADOR |

| | | |
|---|---|---|
| **Single Disc**<br>**Simple Disque**<br>**Einzeltellerraeder**<br>**Simplice Disco**<br>**Simple Disco** | **110-40** | **For Liquid Fertilizer**<br>**Pour Engrais Liquide**<br>**Fur Flüssiger Dünger**<br>**Per Concimi Liquido**<br>**Para Abono Liquido** |

5-PL62-007-B

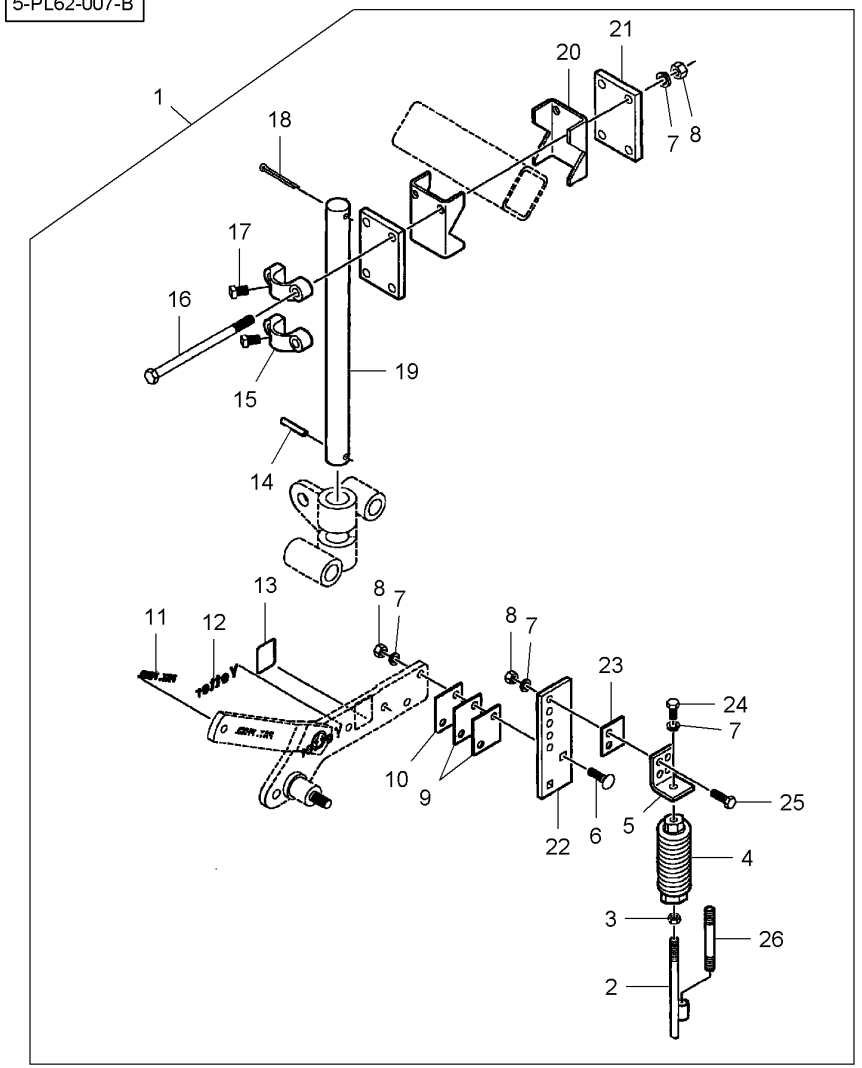


[A] WITH 25 FLUTE BLADE
AVEC DISQUE 25 RAINURES
MIT 25 RIPPES SCHEIBE
CON DISCO 25 SCANALATURAS
CON DISCO 25 ESTRIAS

[B] WITH INJECTOR
AVEC ATOMISEUR
MIT EINSPRITZDUESE
CON INIETTORE COMPLT
CON INYECTOR

| Attachments<br>Accessoires<br>Ausrüstungen<br>Accessori<br>Accesorios | 110-45 | Offset Shaft<br>Arbre Deportee<br>Grenz Welle<br>Albero A Versori Laterali<br>Arbol Desplazado |
|---|---|---|

5-PL19-002-B

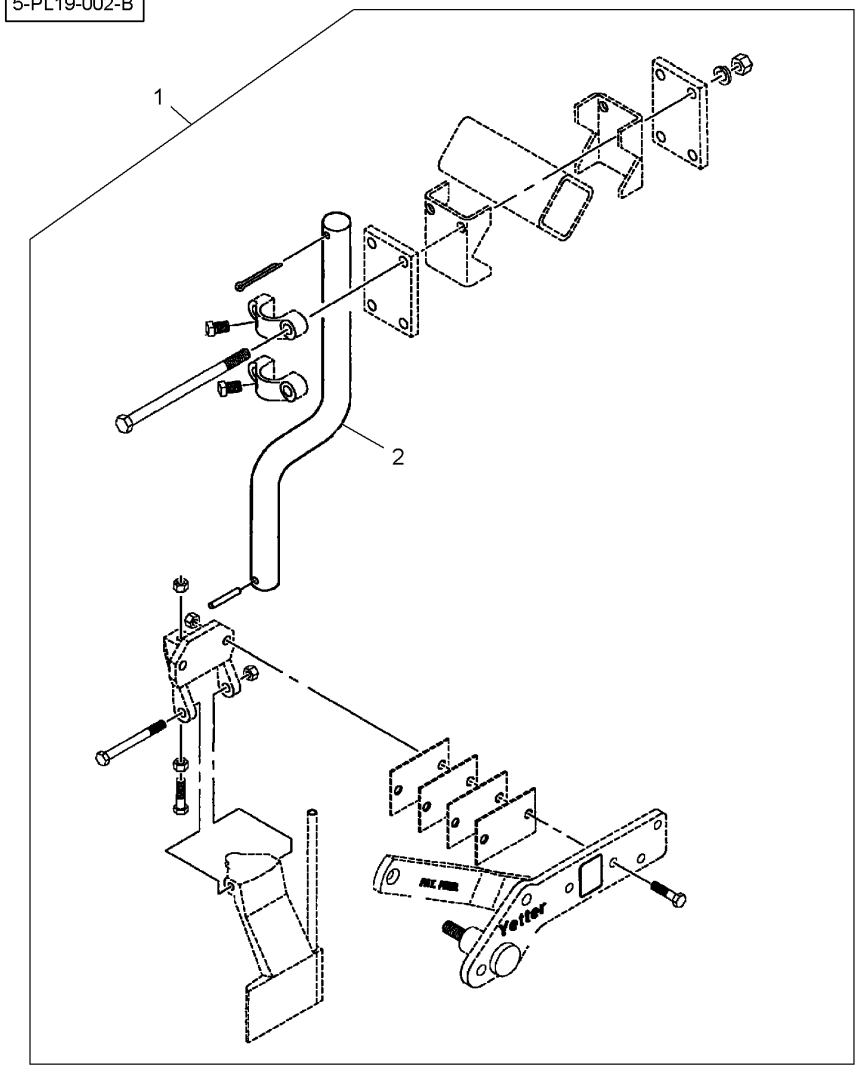


| | | | | | |
|---|---|---|---|---|---|
| 1 | 6000609 | | **1** KIT, ATTACHMENT | JEU ACCESSOIRES<br>KIT ACCESSORI | SATZ ANBAUTEILE<br>JUEGO ACCESORIO |
| 2 | 700720957 | 1 | **4** SHANK | ANGLE<br>FUSO | SCHAFT<br>MANGO. |

120

**Decals**
**Décalcomanies**
**Abziehbilder**
**Decalcomanie**
**Calcomanías**

# 120-5

5-PL18-001-B

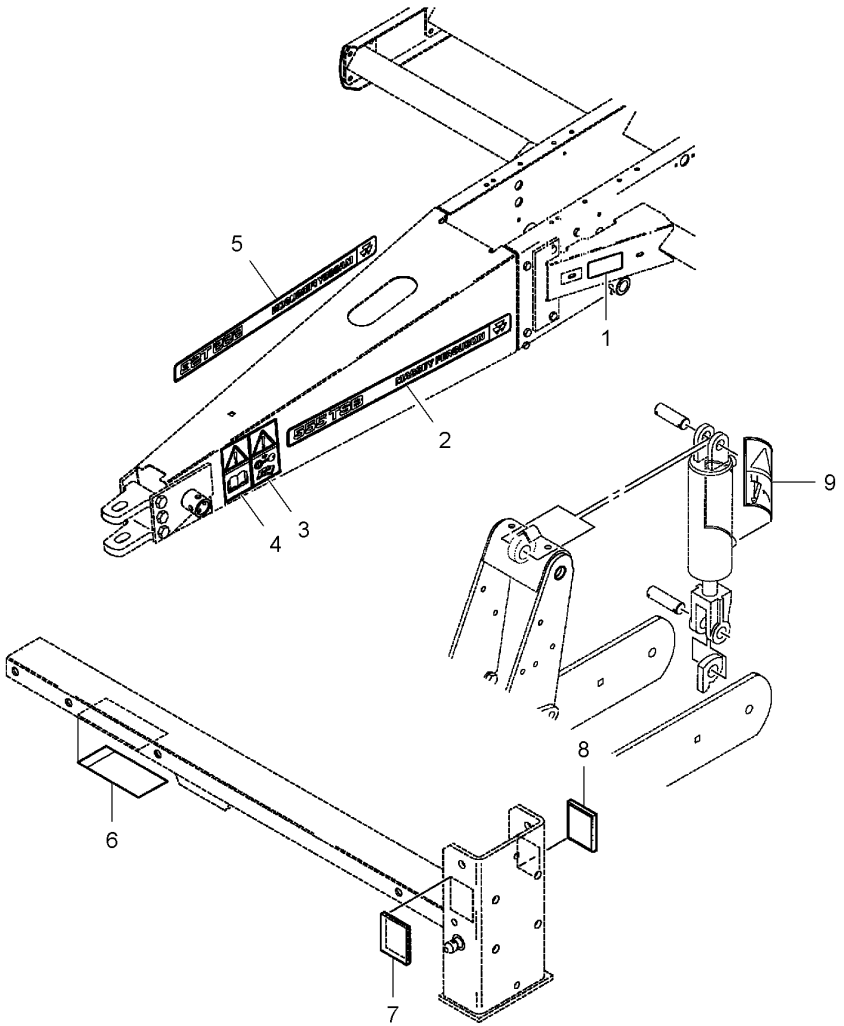


| | | | | | |
|---|---|---|---|---|---|
| 1* | 853638 | | 1 | DECAL | DECALCOMANIE<br>DECALCOMANIA |
| 2* | 700725847 | ◀ | 1 | DECAL | DECALCOMANIE<br>DECALCOMANIA |
| 3* | 700715192 | | 1 | DECAL | DECALCOMANIE<br>DECALCOMANIA |
| 4* | 700714074 | | 1 | DECAL | DECALCOMANIE<br>DECALCOMANIA |
| 5* | 700725848 | ▶ | 1 | DECAL | DECALCOMANIE<br>DECALCOMANIA |
| 6* | N17858 | | 2 | DECAL | DECALCOMANIE<br>DECALCOMANIA |
| 7* | 700714660 | | 2 | REFLECTOR | CATADIOPTRE<br>CATADIOTTRO |
| 8* | 700714662 | [A] | 2 | REFLECTOR | CATADIOPTRE<br>CATADIOTTRO |
| 9* | 17859 | | 2 | DECAL | DECALCOMANIE<br>DECALCOMANIA |

AUFKLEBER
CALCOMANIA

RUECKSTRAHLER
LUZ REFRACTANTE

[A] RED
ROUGE
ROT
ROSSO
ROJO

**Decals**
**Décalcomanies**
**Abziehbilder**
**Decalcomanie**
**Calcomanías**

**120-10**

5-PL18-002-B

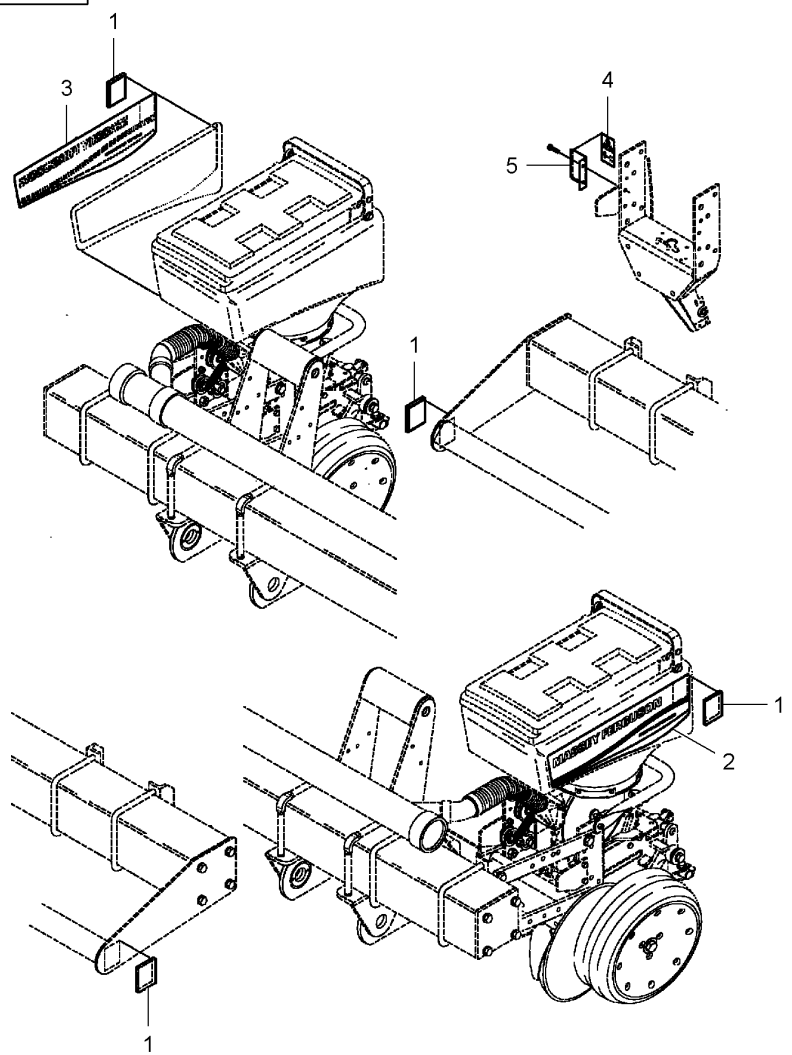


| | | | | | |
|---|---|---|---|---|---|
| 1* | 700714661 | [A] | **4** REFLECTOR | CATADIOPTRE<br>CATADIOTTRO | RUECKSTRAHLER<br>LUZ REFRACTANTE |
| 2* | 700725883 | ◀ | **1** DECAL | DECALCOMANIE<br>DECALCOMANIA | AUFKLEBER<br>CALCOMANIA |
| 3* | 700725884 | ▶ | **1** DECAL | DECALCOMANIE<br>DECALCOMANIA | AUFKLEBER<br>CALCOMANIA |
| 4* | 17877 | | **2** DECAL | DECALCOMANIE<br>DECALCOMANIA | AUFKLEBER<br>CALCOMANIA |
| 5* | 855380 | | **2** SHANK | ANGLE<br>FUSO | SCHAFT<br>MANGO. |

[A] ORANGE
ORANGE
ORANGE
ARANCIONE
ANARANJADO

**Decals**
**Décalcomanies**
**Abziehbilder**
**Decalcomanie**
**Calcomanías**

**120-15**

5-PL18-003-B

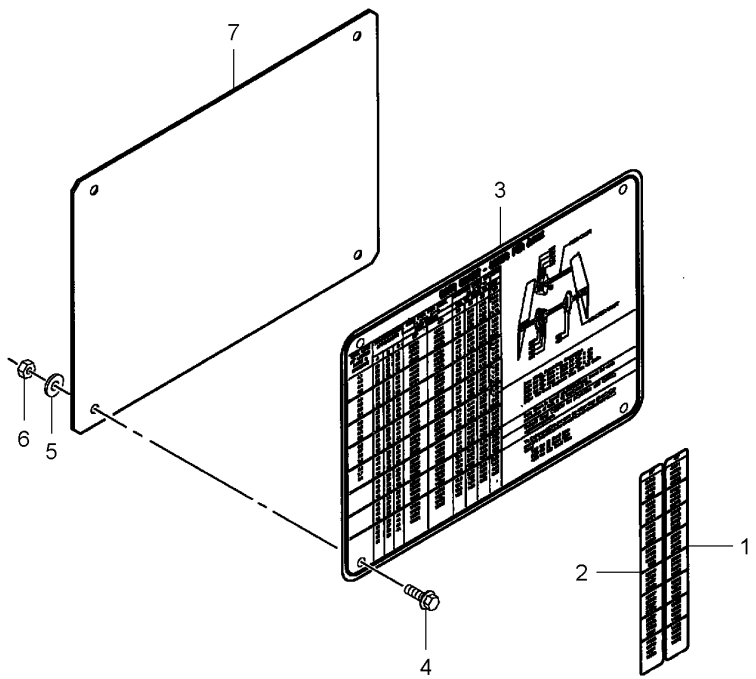


| | | | | | |
|---|---|---|---|---|---|
| 1* | N857540 | 1,5 M | **1** DECAL | DECALCOMANIE<br>DECALCOMANIA | AUFKLEBER<br>CALCOMANIA |
| 2* | N857541 | 2,3 M | **1** DECAL | DECALCOMANIE<br>DECALCOMANIA | AUFKLEBER<br>CALCOMANIA |
| 3* | 855038 | | **1** PLATE | PLAQUE<br>PIASTRA | PLATTE<br>PLATO |
| 4 | 11701 | 1/4"-20 X 5/8 | **4** CAPSCREW | VIS BOUCHON<br>TAPPO A VITE | HUTSCHRAUBE<br>TORNILLO TAPON |
| 5* | 70918264 | 1/4" | **4** WASHER | RONDELLE<br>RONDELLA | SCHEIBE<br>ARANDELA |
| 6 | 70923358 | 1/4"-20 | **4** LOCKNUT | ECROU FREIN<br>AUTOBLOCCANTE | SICHERUNGSMUTTER<br>CONTRATUERCA |
| 7 | 853854 | | **1** PLATE | PLAQUE<br>PIASTRA | PLATTE<br>PLATO |

**Decals**
**Décalcomanies**
**Abziehbilder**
**Decalcomanie**
**Calcomanías**

**120-20**

5-PL18-004-B

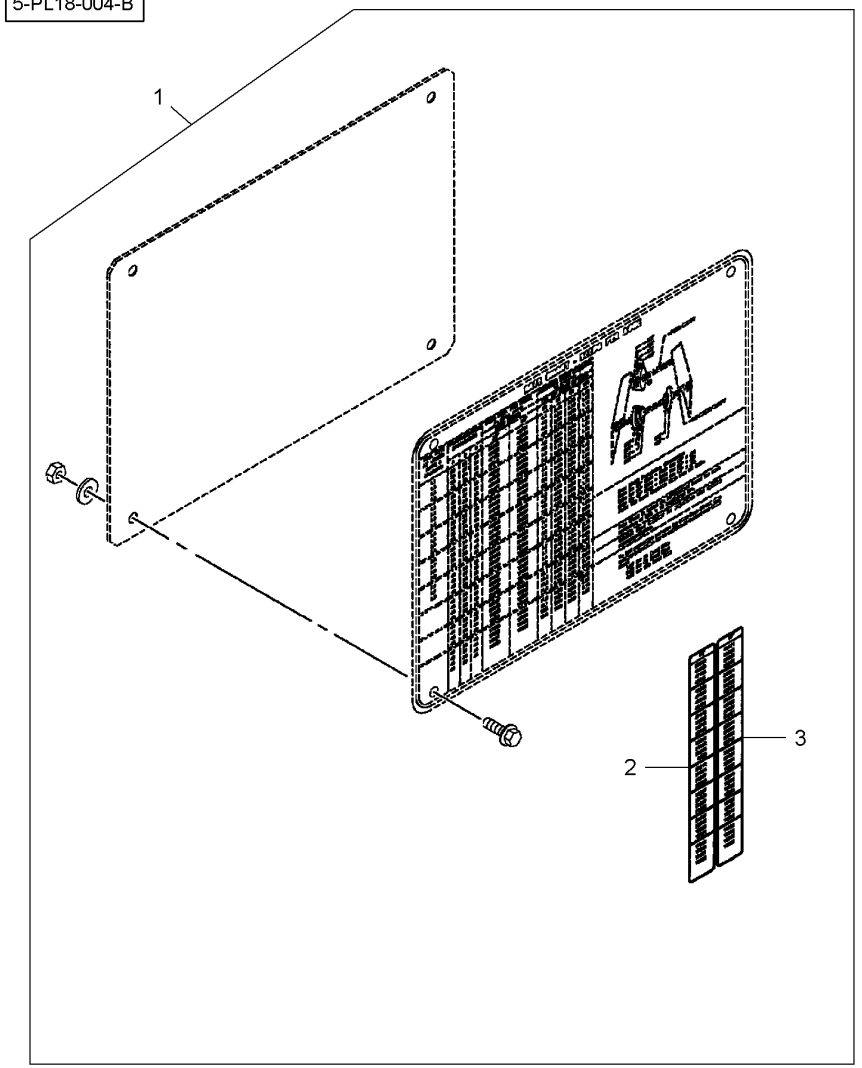


| | | | | | | |
|---|---|---|---|---|---|---|
| 1 | 6100232 | | **1** | KIT, ATTACHMENT | JEU ACCESSOIRES<br>KIT ACCESSORI | SATZ ANBAUTEILE<br>JUEGO ACCESORIO |
| 2 | N855863 | 1 36" | **1** | DECAL | DECALCOMANIE<br>DECALCOMANIA | AUFKLEBER<br>CALCOMANIA |
| 3 | N855864 | 1 40" | **1** | DECAL | DECALCOMANIE<br>DECALCOMANIA | AUFKLEBER<br>CALCOMANIA |

| Decals<br>Décalcomanies<br>Abziehbilder<br>Decalcomanie<br>Calcomanías | 120-25 | Peanut<br>Arachide<br>Erdnuss<br>Arachide<br>Cacahuete |
|---|---|---|

5-PL18-005-B

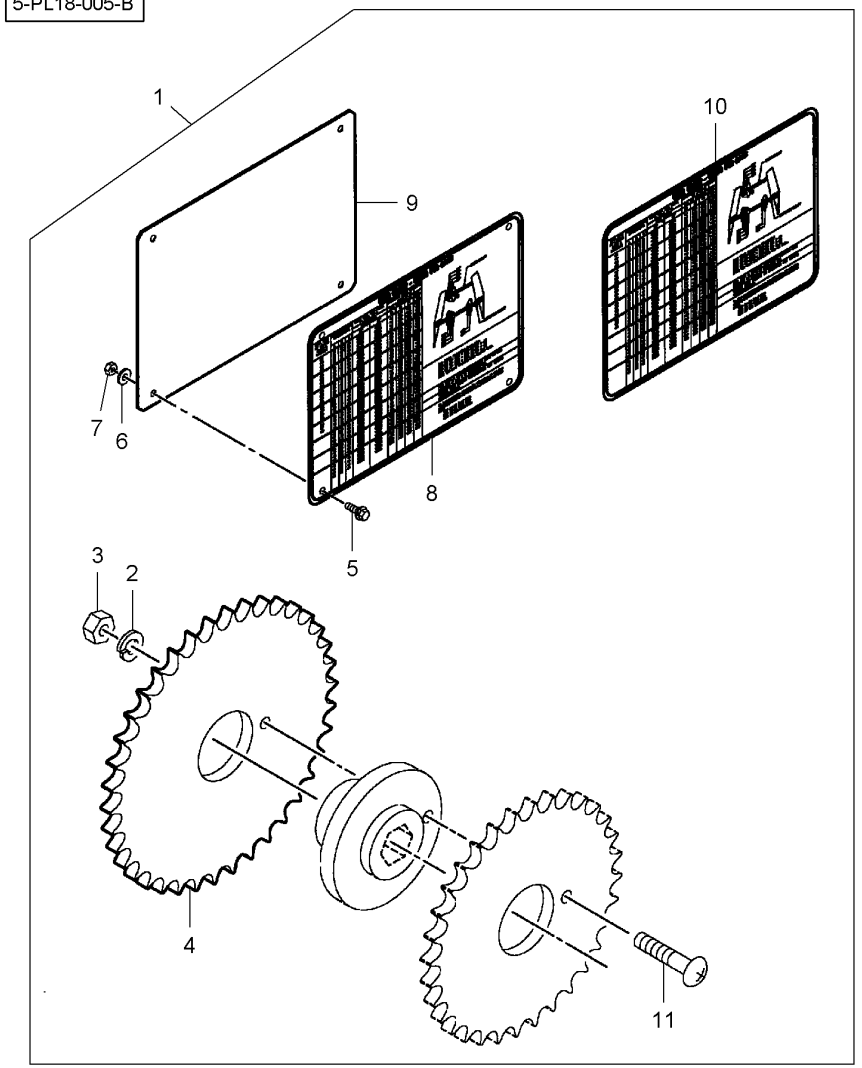


| | | | | | | |
|---|---|---|---|---|---|---|
| 1 | 6000576 | | 1 | KIT, ATTACHMENT | JEU ACCESSOIRES<br>KIT ACCESSORI | SATZ ANBAUTEILE<br>JUEGO ACCESORIO |
| 2* | 705012 | 1 1/4" | 1 | LOCK WASHER | RONDELLE FREIN<br>RONDELLA ARRESTO | SICHERUNGSRING<br>ARANDELA SEGURID |
| 3* | 70916622 | 1 1/4"-20 | 1 | NUT UNC | ECROU UNC<br>DADO UNC | MUTTER UNC<br>TUERCA UNC |
| 4 | 854107 | 1 38 | 1 | SPROCKET | BARBOTIN<br>RUOTA MOTRICE | KETTENRAD<br>RUEDA DE CADENA |
| 5 | 11701 | 1 1/4"-20 X 5/8 | 4 | CAPSCREW | VIS BOUCHON<br>TAPPO A VITE | HUTSCHRAUBE<br>TORNILLO TAPON |
| 6* | 70918264 | 1 1/4" | 4 | WASHER | RONDELLE<br>RONDELLA | SCHEIBE<br>ARANDELA |
| 7 | 70923358 | 1 1/4"-20 | 4 | LOCKNUT | ECROU FREIN<br>AUTOBLOCCANTE | SICHERUNGSMUTTER<br>CONTRATUERCA |
| 8 | 854263 | 1 | 1 | DECAL | DECALCOMANIE<br>DECALCOMANIA | AUFKLEBER<br>CALCOMANIA |
| 9 | 853854 | 1 | 1 | PLATE | PLAQUE<br>PIASTRA | PLATTE<br>PLATO |
| 10 | N857560 | 1 | 1 | DECAL | DECALCOMANIE<br>DECALCOMANIA | AUFKLEBER<br>CALCOMANIA |
| 11 | 700726841 | 1 1/4"-20 X 1-1/4 | 1 | SCREW | VIS<br>VITE | SCHRAUBE<br>TORNILLO |

**Plate S.M.V**
**Plaque S.M.V**
**Platte S.M.V**
**Piastra S.M.V**
**Placa S.M.V**

**120-30**

5-PL66-001-B

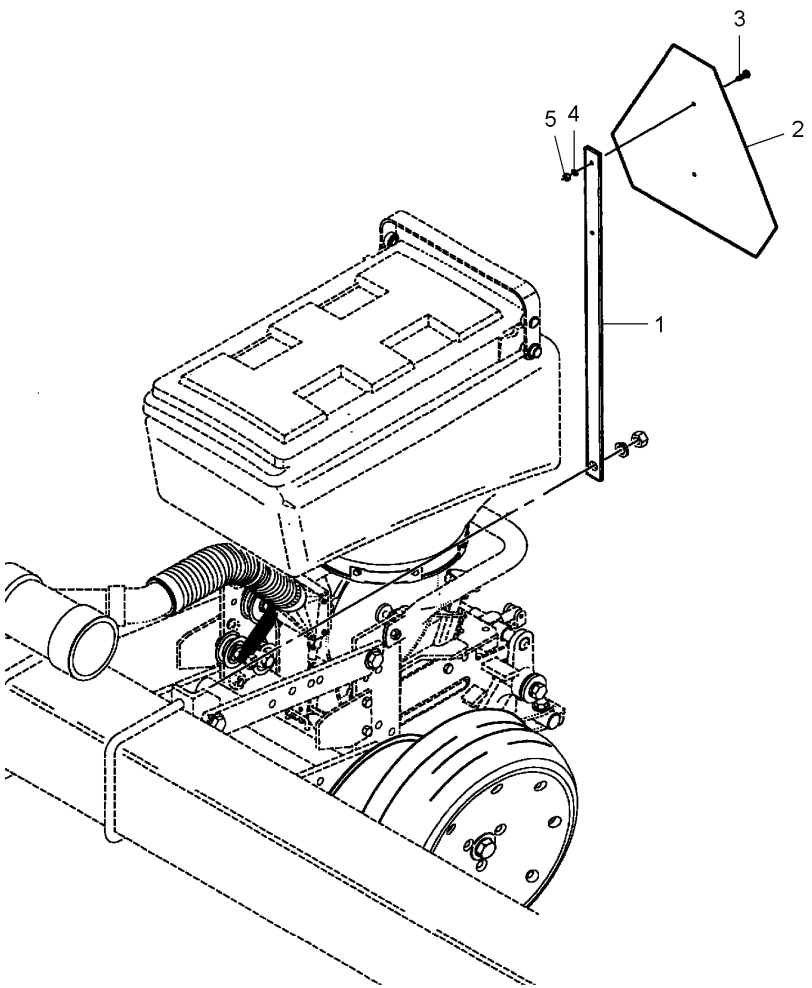


| | | | | | |
|---|---|---|---|---|---|
| 1 | 852760 | | **1** STRAP | PATTE<br>CORREGGIA | LASCHE<br>FAJA |
| 2 | 71379434 | | **1** TRIANGLE | TRIANGLE<br>TRIANGOLO | DREIECK<br>TRIANGULO |
| 3 | 700711167 | 1/4"-20 X 3/4 | **2** SCREW | VIS<br>VITE | SCHRAUBE<br>TORNILLO |
| 4 | 353441X1 | 1/4" | **2** LOCK WASHER | RONDELLE FREIN<br>RONDELLA ARRESTO | SICHERUNGSRING<br>ARANDELA SEGURID |
| 5 | 355564X1 | 1/4"-20 | **2** NUT UNC | ECROU UNC<br>DADO UNC | MUTTER UNC<br>TUERCA UNC |

**Footstep**
**Marchepied**
**Stufe**
**Predella**
**Estribo**

# 120-35

5-PL24-001-B

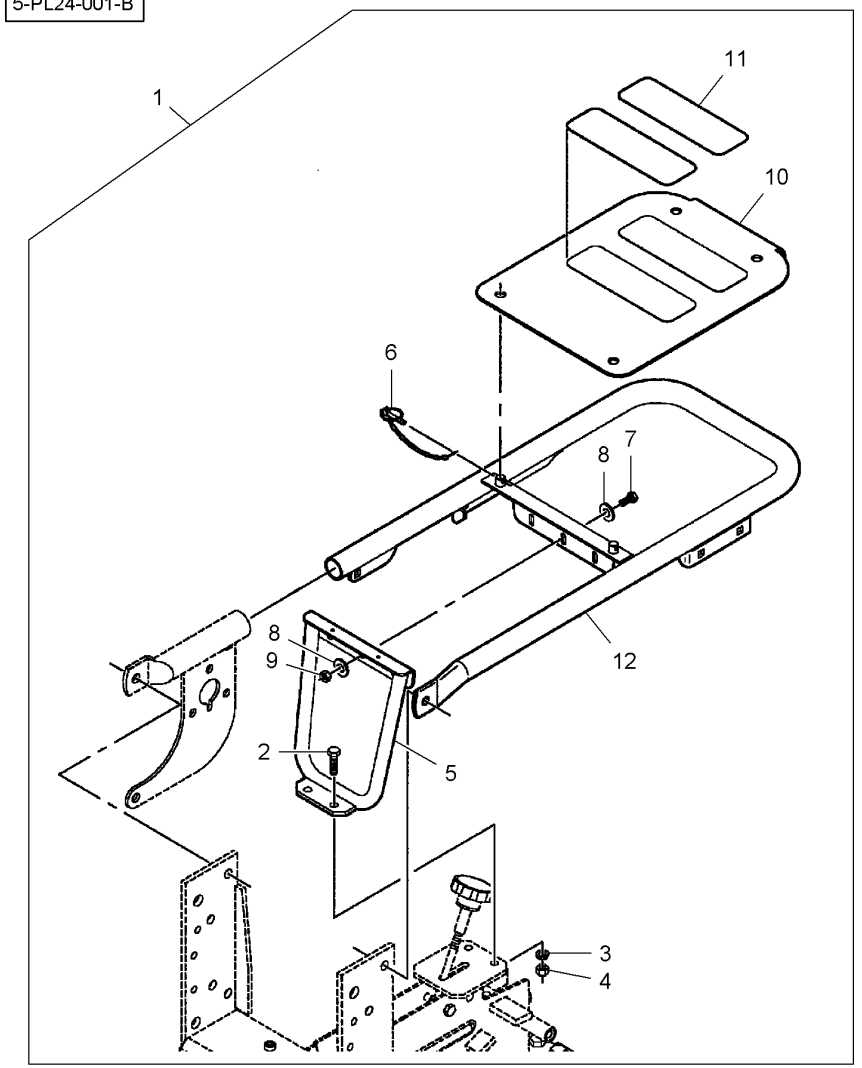


| | | | | | | |
|---|---|---|---|---|---|---|
| 1* | 6000758 | | | **1** | KIT, ATTACHMENT | JEU ACCESSOIRES<br>KIT ACCESSORI |
| 2* | 700708350 | 1 | M10 X 30 | **2** | BOLT | BOULON<br>BULLONE |
| 3* | 700708367 | 1 | M10 | **2** | LOCK WASHER | RONDELLE FREIN<br>RONDELLA ARRESTO |
| 4* | 7704398 | 1 | M10 | **2** | NUT | ECROU<br>DADO |
| 5* | 700163827 | 1 | | **1** | SUPPORT | SUPPORT<br>SOPPORTO |
| 6* | 863415 | 1 | | **2** | CLEVIS PIN | AXE<br>PERNO D'ATTACCO |
| 7* | **700708359** | 1 | M8 X 20 | **3** | BOLT | BOULON<br>BULLONE |
| 8* | 705525 | 1 | 5/16" | **6** | WASHER | RONDELLE<br>RONDELLA |
| 9* | 1441461X1 | 1 | M8 | **3** | LOCKNUT | ECROU FREIN<br>AUTOBLOCCANTE |
| 10* | N859060 | 1 | | **1** | BRACKET | SUPPORT FIXATION<br>STAFFETTA |
| 11* | 853898 | 1 | | **2** | TREAD PLATE | PLAQUE STRIEE<br>LAMIERA STRIATA |
| 12* | 700163862P | 1 | | **1** | STEP | MARCHEPIED<br>GRADINO |

| | | | | | | |
|---|---|---|---|---|---|---|
| 1* | 6000758 | | | **1** | KIT, ATTACHMENT | SATZ ANBAUTEILE<br>JUEGO ACCESORIO |
| 2* | 700708350 | 1 | M10 X 30 | **2** | BOLT | BOLZEN<br>BULON |
| 3* | 700708367 | 1 | M10 | **2** | LOCK WASHER | SICHERUNGSRING<br>ARANDELA SEGURID |
| 4* | 7704398 | 1 | M10 | **2** | NUT | MUTTER<br>TUERCA |
| 5* | 700163827 | 1 | | **1** | SUPPORT | TRAGER<br>SOPORTE |
| 6* | 863415 | 1 | | **2** | CLEVIS PIN | SPLINTBOLZEN<br>BULON CILINDRICO |
| 7* | **700708359** | 1 | M8 X 20 | **3** | BOLT | BOLZEN<br>BULON |
| 8* | 705525 | 1 | 5/16" | **6** | WASHER | SCHEIBE<br>ARANDELA |
| 9* | 1441461X1 | 1 | M8 | **3** | LOCKNUT | SICHERUNGSMUTTER<br>CONTRATUERCA |
| 10* | N859060 | 1 | | **1** | BRACKET | HALTEARM<br>SOPORTE |
| 11* | 853898 | 1 | | **2** | TREAD PLATE | SPURPLATTE<br>PLACA DE PASO |
| 12* | 700163862P | 1 | | **1** | STEP | STUFEN<br>APOYAPIES |